Installation

MGE™ Galaxy™ 3500 and Smart-UPS® VT Enclosure for Batteries and Enclosure for Transformer 400 V

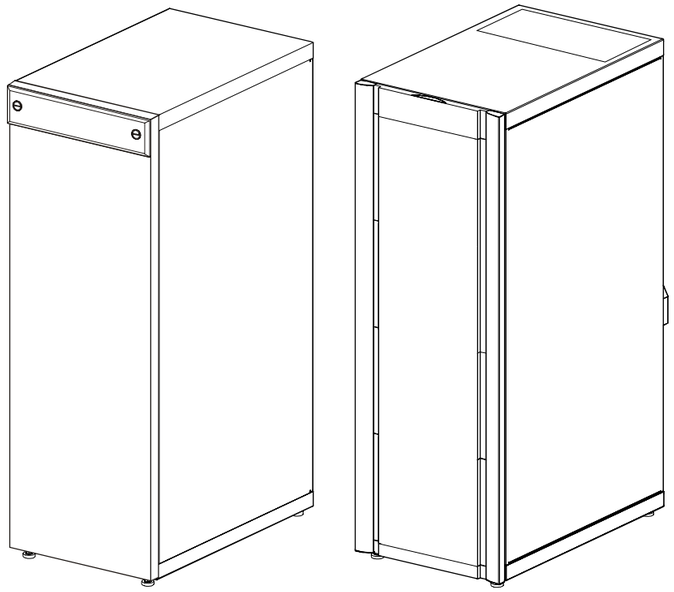

Galaxy 3500
Enclosure for Batteries
Enclosure for Transformer

Smart-UPS VT
Enclosure for Batteries
Enclosure for Transformer

IMPORTANT SAFETY INSTRUCTIONS - SAVE THESE INSTRUCTIONS

Warning: ALL safety instructions in the Safety Sheet (990-2940) must be read, understood and followed when installing the UPS system. Failure to do so could result in equipment damage, serious injury, or death.

Caution: All electrical power and power control wiring must be installed by a qualified electrician, and must comply with local and national regulations for maximum power rating.

990-3602-001 7/2009

Product Overview

Enclosure for batteries

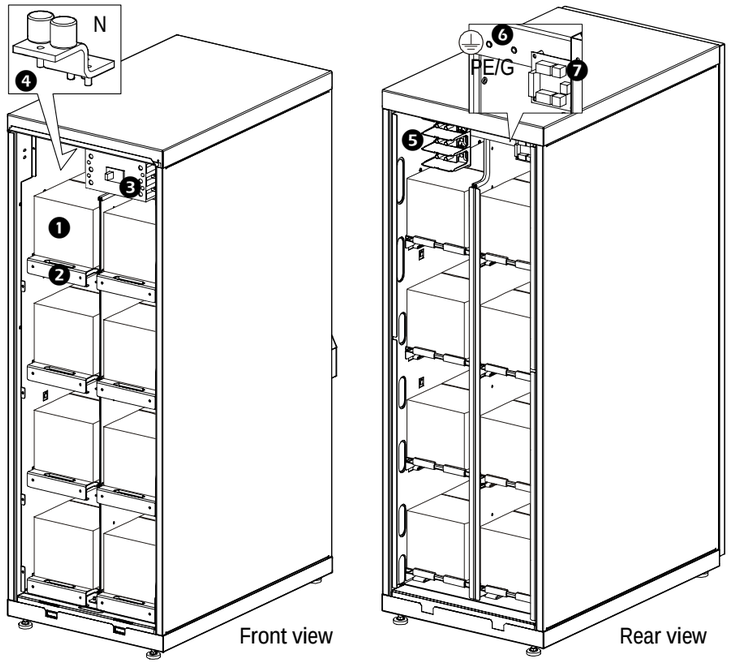

1. Battery (customer-provided - shown for reference only)
2. Battery tray
3. DC disconnect
4. Neutral
5. Battery output terminals
6. Protective Earth/Ground
7. Communication board

The enclosure can contain up to 32 batteries - 16 batteries on the positive (right) side and 16 batteries on the negative (left) side. The enclosure holds eight battery trays and four batteries each. The maximum battery size is 197 mm x 165 mm x 175 mm.

Enclosure for Transformer

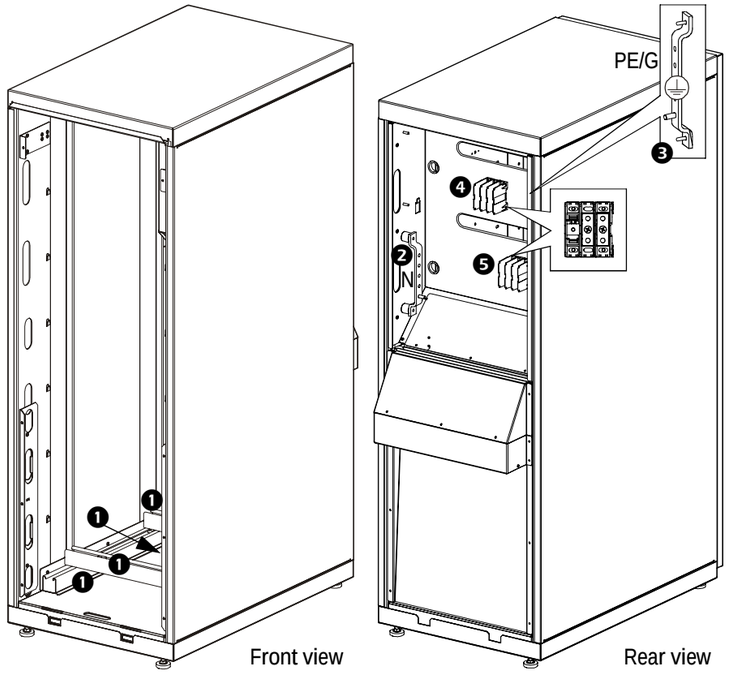

1. Unistruts
2. Neutral busbar
3. PE/ground busbar
4. Input terminal block
5. Output terminal block

Site Planning

Note: Refer to the UPS Receiving and Unpacking sheet (990-2940 for MGE Galaxy 3500 and 990-1747 for Smart-UPS VT) to determine the space requirements. Consult local codes for any additional requirements. Ideally, install the enclosure in a location close to the UPS.

Level the Enclosures

Warning: The system must be installed on a level floor. The leveling feet will stabilize the enclosure, but will not account for a badly leveled floor.

❶ Use a screwdriver to lower the four leveling feet.

❷ Ensure that the enclosure is level.

❸ Do not move the enclosure after the leveling feet have been lowered.

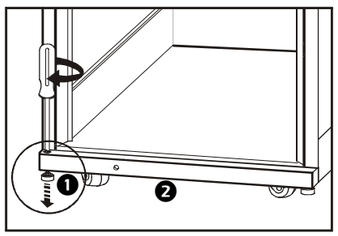

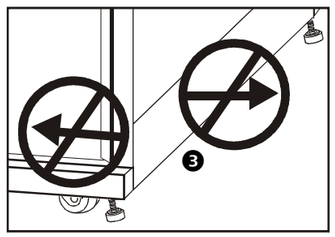

Prepare for Cables

Top cable entry

Note: Top cable entry is only applicable to Smart-UPS VT enclosure for batteries.

❶Remove the upper rear cover.

❷Remove the top cover.

❸Make holes for cables/grommets.

❹Re-install the top cover.

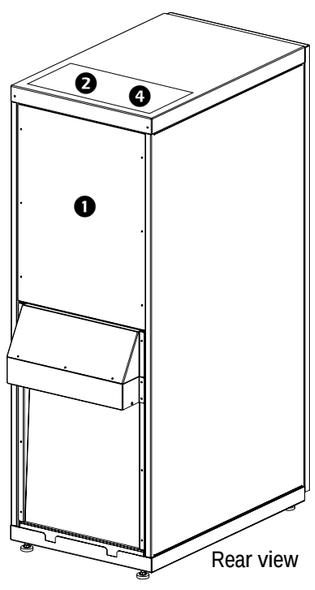

Bottom cable entry through the I/O box (optional)

❶Remove the upper rear cover.

❷Remove the top cover of the I/O box.

❸Remove the bottom cover of the I/O box (this one will not be reinstalled).

❹Route the cables through the I/O box to the cable connection area.

❺Re-install the top cover of the I/O box.

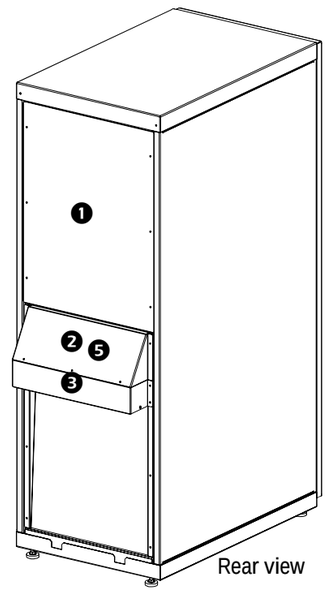

Install and Connect Batteries

Caution: Install the batteries from the bottom and work your way up.

❶Remove the front door.

❷Remove the inner front door by loosening the ten screws.

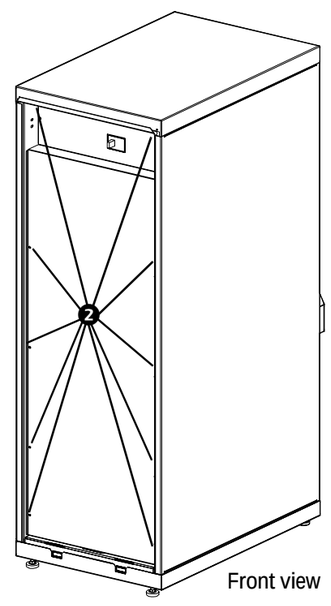

❸Loosen the two screws from each battery tray and remove the battery trays.

❹Install four batteries on each battery tray.

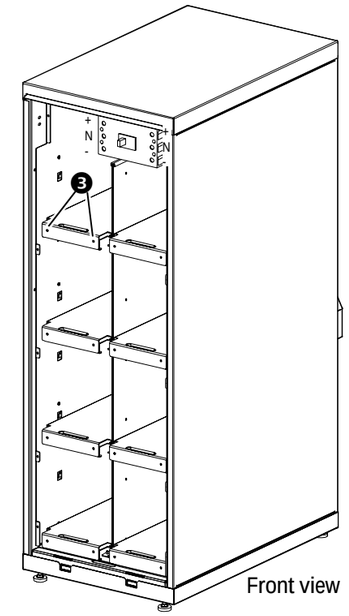

❺Connect wires between the four batteries on the tray (negative to positive).

❻Re-install the trays with the batteries installed and secure with the two screws.

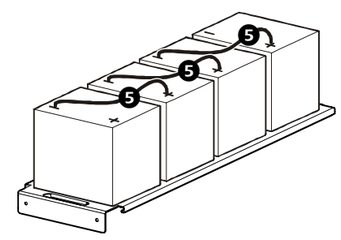

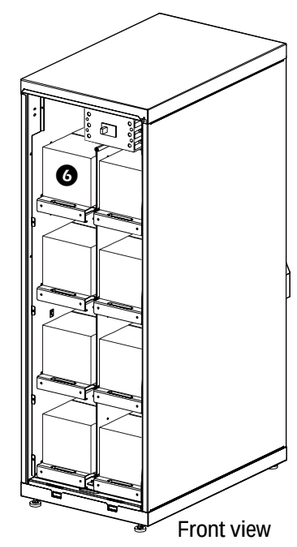

Connect the Positive Bus

See “Battery Enclosure Wiring” for more information.

❶Connect wire from the battery breaker + and connect it to the right top tray.

❷Connect wire from the top tray to the second tray.

❸Connect wire from the second tray to the third tray.

❹Connect wire from the third tray to the bottom tray.

❺Connect wire from the back (-) of the bottom tray to the midpoint/neutral busbar in the top of the enclosure.

❻Connect wire from the midpoint/ neutal busbar to the midpoint/ neutral of the battery breaker.

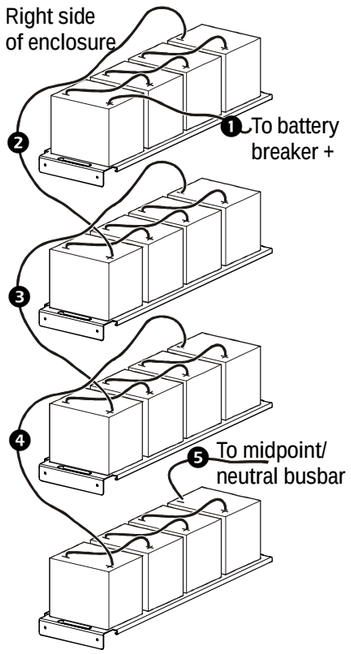

Connect the Negative Bus

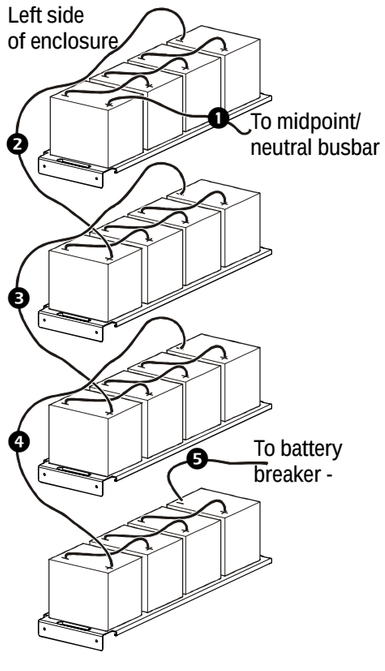

❶Connect wire from the midpoint/neutral busbar to the + on the first battery from the front at the left top tray.

❷Connect wire from the top tray to the second tray.

❸Connect wire from the second tray to the third tray.

❹Connect wire from the third tray to the bottom tray.

❺Connect wire from the back of the bottom tray to the battery breaker -.

Connect the EPO to the UPS and the Battery Enclosure

❶ Connect the EPO (Emergency Power Off) to J108 in the UPS and to J203 in the Battery Enclosure by guiding the cable through conduits as described on the previous page.

❷ Connect the EPO by using this configuration:

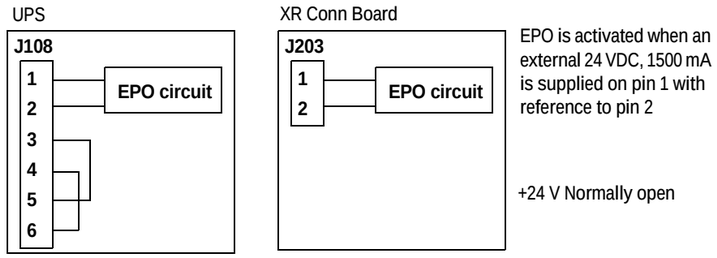

Connect battery cables between the Enclosure for batteries and the UPS

❶Connect battery cables from the battery terminal block (+, N, -) to the (+, N, -) battery cable landings in the UPS.

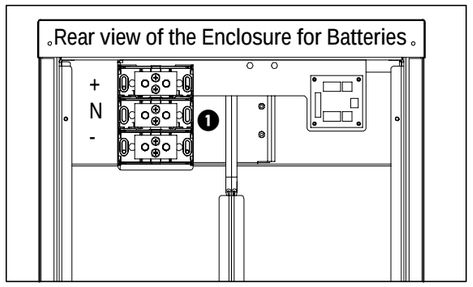

Install and Connect Transformer

❶Remove the front door.

❷Remove the inner front door by loosening the ten screws.

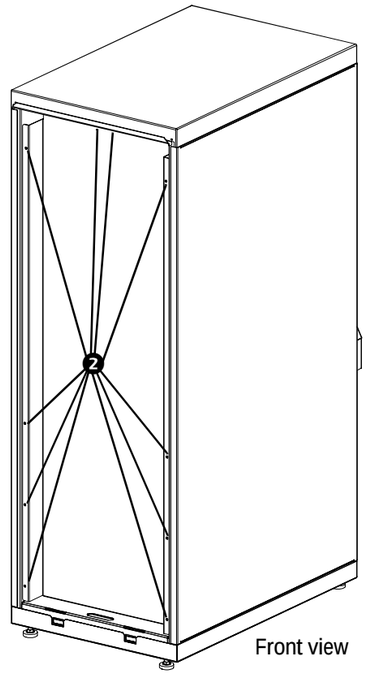

❸ Install the transformer on the four unistruts (two unistruts are stationary and two are adjustible) and secure using the four M8 spring nuts.

❹ Connect cables from the transformer input to the top of the input terminal block and the ground and neutral busbars.

❺ Connect cables from the transformer output to the top of the output terminal block and the ground and neutral busbars.

❻ Connect cables (L1, L2, L3, N, G) from the mains supply to the bottom of the input terminal block and the ground and neutral busbars.

❼ Connect cables (L1, L2, L3, N, G) from the bottom of the output terminal block and the ground and neutral busbars to the UPS input terminals.

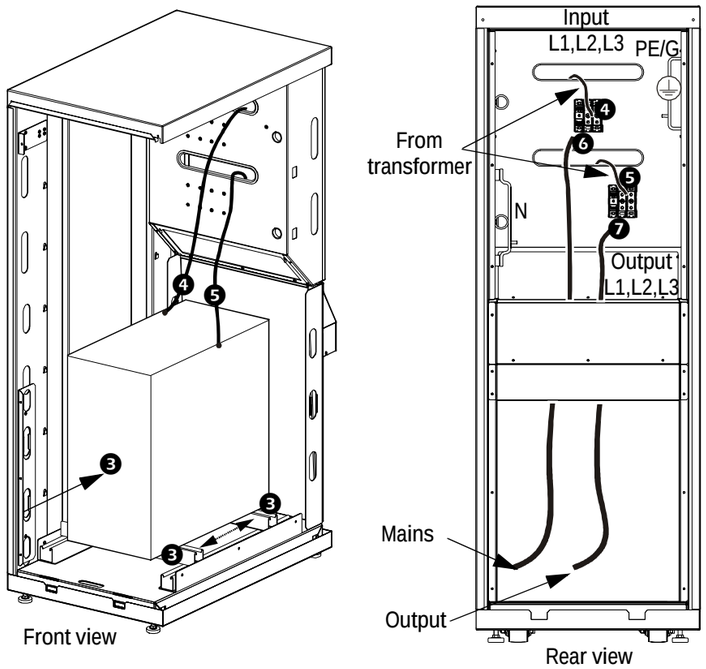

Specifications

Physical	Battery	Transformer
Dimensions (H × W × D)	1487 × 523 ×837 mm	1487 × 523 ×837 mm
Shipping dimensions (H × W × D)	1664 × 724 ×1105 mm	1664 × 724 ×1105 mm
Weight	259.5 kg	146.5 kg
Shipping weight	294 kg	181 kg

Environmental	
Operating environment	Indoor use only, protect from water and conductive contaminates
Operating temperature	0° to 40°C
Recommendation for batteries	15° to 25°C
Humidity	0 to 95%, non-condensing

Battery requirements

Electrical	10-40 kVA
Nom voltage (VDC)	+/- 194
I_{Nom} discharge[1]	87.9
I_{Max} discharge[2]	110.1
End Voltage (VDC)	+/- 154

[1] Nominal battery discharge current based on rated load and nominal battery voltage.
[2] Maximum battery discharge current based on rated load at the end of the discharge.

Recommended batteries.

Manufacturer	Model
OTP	6FM24
OTP	6FM38
Yuasa	NP7-12
Yuasa	NP24-12
Yuasa	NP38-12
Panasonic	LC-X1224
Panasonic	LC-X1238

Maximum total battery weight is 500 kg.

M6 torque 12 Nm.

Transformer requirements

Electrical	40 kVA/32 kW		
	380 V	400 V	415 V
Max. input current (A)	57.4	54.6	52.6
Max. output current (A)	60.8	57.7	55.6

Maximum overall recommended dimensions for customer-provided transformer are (WxDxH) 400 x 500 x 600 mm.

Maximum transformer mounting dimensions are (WxD) 305 x 410 mm and maximum transformer weight is 863 kg.

Hardware provided is 4 x M8.

M8 torque 24 Nm.

Contact Information

For local, country-specific centers: go to www.apc.com/support/contact.

Appendix

Battery Enclosure Wiring