THE BEST SUPPORT
FOR YOUR AV & IT HARDWARE
T: + 31(0)23-5478888 | E: info@newstar.eu | W: www.newstar.eu

MED-M050 THE NEWSTAR MEDICAL LAPTOP CART

NewStar Mobile Laptop Cart, Height 80-105cm (manual) - White

SPECIFICATIONS

Color	White
Depth	41 cm
Height	80 - 105 cm
Height adjustment	Gasspring
Max. screen size	18
Max. weight	8
Min. screen size	10
Min. weight	0
Screens	1
Swivel (degrees)	360°
Type	Turn
Warranty	5 year
Width	46 cm
EAN code	8717371446543

The NewStar medical laptop cart, model MED-M050 is a mobile workplace for laptop. This laptop cart is a great choice for space saving placement or when wall-, ceiling mounting or desk placement is not an option. This cart stretches your investment by sharing a workplace over multiple rooms like hospitals. Get optimal positioning for both standing and seated users, in any part of your location.

NewStars' laptop cart increases the use of computing in numerous environments like hospitals, offices, schools, workshops and so on. By using an ergonomic cart neck- and back complaints can be avoided. The cart is easily height adjustable from 80 to 105 centimetres. An innovative cable management conceals and routes cables. Hide your cables to keep the workplace nice, tidy and easy to clean.

NewStars' laptop cart, MED-M050 holds your laptop and even hides your cables. The heavy duty casters allow the stand to move it to where you need it. Easily roll this cart through doorways and over thresholds.

NewStar MED-M050 is suitable for laptops up to 18" (44 cm). The total weight capacity of this cart is 8 kilogram. Speedy assembly and installation.

All installation material is included with the product.

NewStar Products Europe B.V.
Wateringweg 62/B
2031 EJ HAARLEM
THE NETHERLANDS

Phone : +31(0)23-5478888
Fax : +31(0)23-5478889
Email : info@newstar.nl
Website : www.newstar.eu

NewStar cannot be held liable for any inaccuracies and copyrights.
No part of this publication may be reproduced and/or published by print, photocopy, microfilm or in any other way, without prior written permission of NewStar Computer Products Europe BV.

THE BEST SUPPORT
FOR YOUR AV & IT HARDWARE
T: + 31(0)23-5478888 | E: info@newstar.eu | W: www.newstar.eu

MED-M050 THE NEWSTAR MEDICAL LAPTOP CART

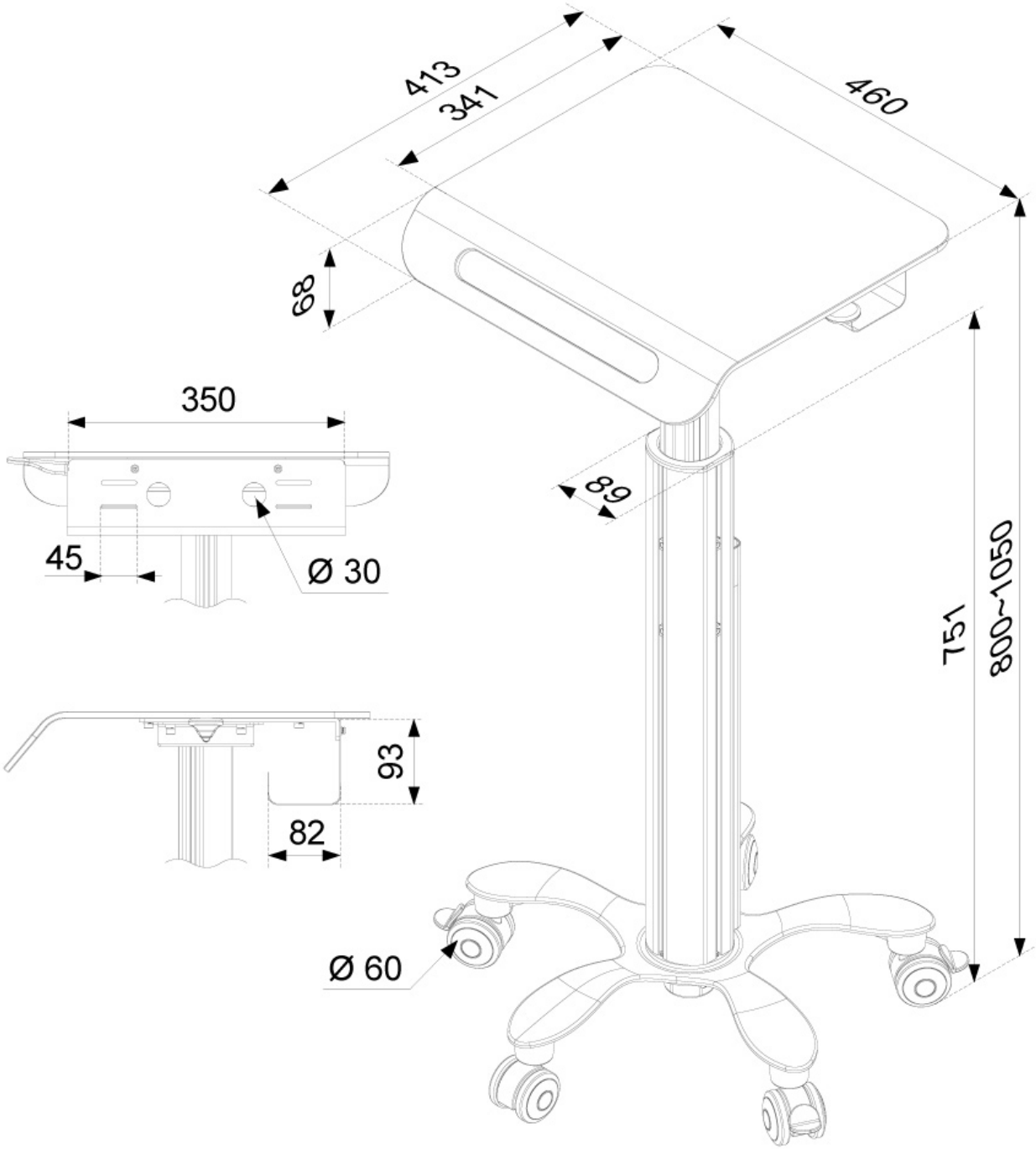

NewStar Products Europe B.V.
Wateringweg 62/B
2031 EJ HAARLEM
THE NETHERLANDS

Phone : +31(0)23-5478888
Fax : +31(0)23-5478889
Email : info@newstar.nl
Website : www.newstar.eu

NewStar cannot be held liable for any inaccuracies and copyrights.
No part of this publication may be reproduced and/or published by print, photocopy, microfilm or in any other way, without prior written permission of NewStar Computer Products Europe BV.