THE BEST SUPPORT
FOR YOUR AV & IT HARDWARE
T: + 31(0)23-5478888 | E: info@newstar.eu | W: www.newstar.eu

LED-VW2500BLACK NEWSTAR FLAT SCREEN VIDEO WALL MOUNT

NewStar Video Wall Monitor Wall Mount for 32"-75" Screen - Black

SPECIFICATIONS

Cable management	No
Color	Black
Depth	10 - 29 cm.
Distance to wall	10 - 29 cm
Height	53 cm.
Max. screen size	75
Max. weight	70
Min. screen size	32
Min. weight	0
Rotate (degrees)	6°
Screens	1
Tilt (degrees)	6°
Type	Fixed
VESA maximum	600x400 mm
VESA minimum	200x200 mm
Warranty	5 year
Width	67 cm.
EAN code	8717371447328

The NewStar wall mount, model LED-VW2500BLACK is a fixed wall mount for flat screens up to 75" (191 cm). This mount is a great choice when you want the ultimate viewing flexibility with your flat screen. Depth of this mount is 5 to 20 centimetres. This wall mount is specially made to be used in video walls. The screen easily can be pulled out.

NewStar LED-VW2500BLACK is suitable for flat screens up to 75" (191 cm). The weight capacity of this product is 70 kg each screen. The wall mount is suitable for screens that meet VESA hole pattern 200x200 to 600x400mm.

Create a clean design videowall presentation with the NewStar LED-VW2500BLACK videowall mount solution!

NewStar Products Europe B.V.
Wateringweg 62/B
2031 EJ HAARLEM
THE NETHERLANDS

Phone : +31(0)23-5478888
Fax : +31(0)23-5478889
Email : info@newstar.nl
Website : www.newstar.eu

NewStar cannot be held liable for any inaccuracies and copyrights.
No part of this publication may be reproduced and/or published by print, photocopy, microfilm or in any other way, without prior written permission of NewStar Computer Products Europe BV.

THE BEST SUPPORT
FOR YOUR AV & IT HARDWARE
T: + 31(0)23-5478888 | E: info@newstar.eu | W: www.newstar.eu

LED-VW2500BLACK NEWSTAR FLAT SCREEN VIDEO WALL MOUNT

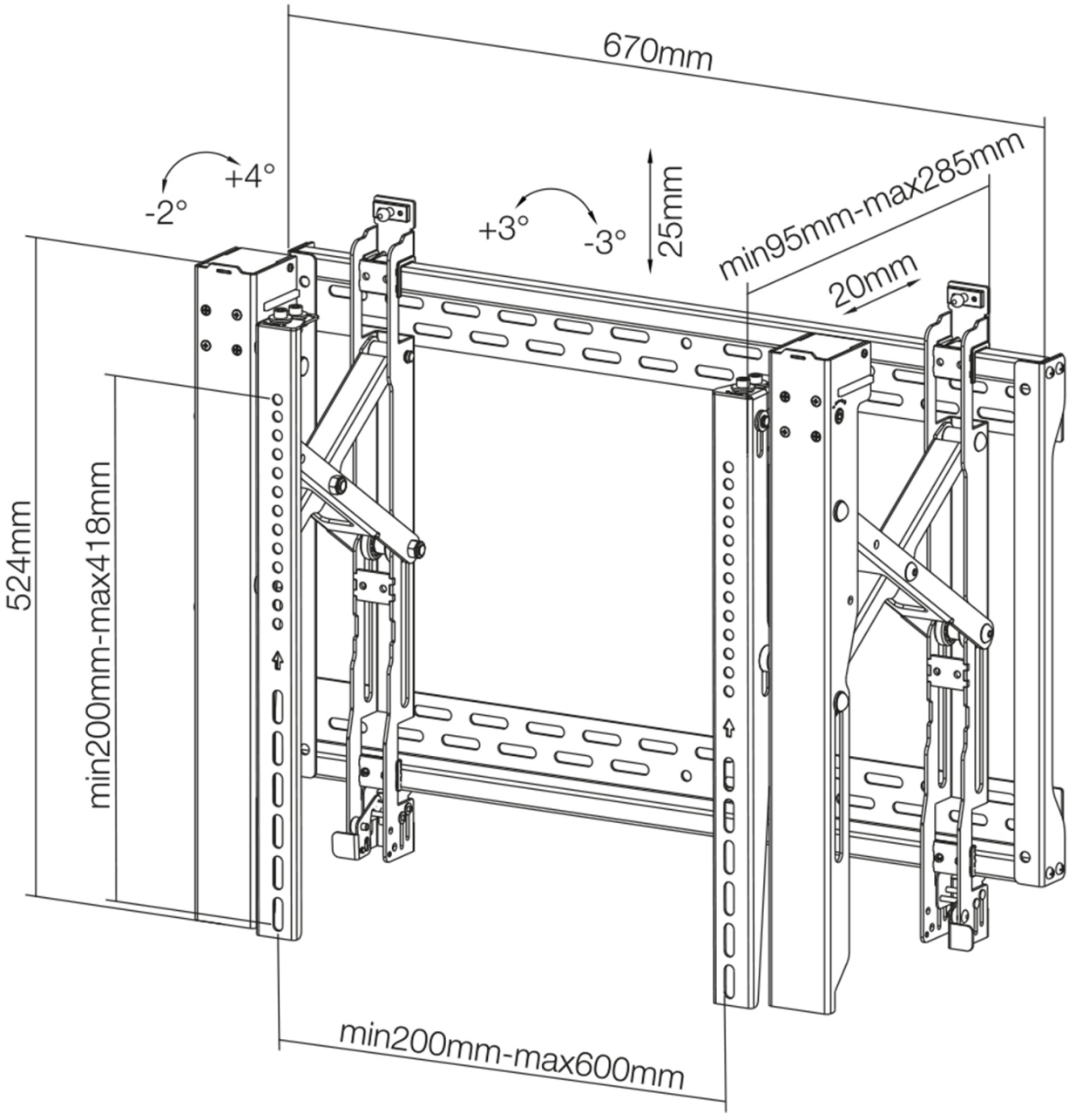

NewStar Products Europe B.V.
Wateringweg 62/B
2031 EJ HAARLEM
THE NETHERLANDS

Phone : +31(0)23-5478888
Fax : +31(0)23-5478889
Email : info@newstar.nl
Website : www.newstar.eu

NewStar cannot be held liable for any inaccuracies and copyrights.

No part of this publication may be reproduced and/or published by print, photocopy, microfilm or in any other way, without prior written permission of NewStar Computer Products Europe BV.