User Guide

Quality, Design and Innovation

home.liebherr.com/fridge-manuals

LIEBHERR

Contents

1 The appliance at a glance ... 3
1.1 Delivered contents ... 3
1.2 Appliance and equipment overview ... 3
1.3 Range of appliance use ... 3
1.4 Conformity ... 4
1.5 EPREL Database ... 4

2 General safety instructions ... 4

3 Start-up ... 5
3.1 Turning on the appliance ... 5
3.2 Insert the equipment ... 5

4 Food management ... 6
4.1 Storing food ... 6
4.2 Storage times ... 6

5 Energy saving ... 7

6 Use ... 7
6.1 Controls and displays ... 7
6.1.1 Status display ... 7
6.1.2 Navigation ... 7
6.1.3 Operating structure ... 7
6.1.4 Display symbols ... 8
6.2 Operating logic ... 8
6.2.1 Activating/deactivating settings ... 8
6.2.2 Selecting function value ... 8
6.2.3 Activating/deactivating settings ... 8
6.2.4 Calling up the customer menu ... 8
6.3 Functions ... 9
Temperature ... 9
SuperCool ... 9
SuperFrost ... 9
PartyMode ... 9
HolidayMode ... 10
E-Saver ... 10
6.4 Settings ... 10
Setting up the WLAN connection ... 10
Entry lock ... 11
Display brightness ... 11
Door alarm ... 11
Temperature unit ... 11
Info ... 11
SabbathMode ... 11
Reminder ... 11
Reset ... 12
Turn off appliance ... 12
6.5 Warnings ... 12
6.5.1 Message ... 12
6.5.2 DemoMode ... 12

7 Equipment ... 12
7.1 Door racks ... 12
7.2 Shelves ... 13
7.3 Split shelf* ... 13
7.4 VarioSafe* ... 14
7.5 Drawers ... 14
7.6 EasyFresh-Safe ... 14
7.7 Humidity control ... 15
7.8 EasyTwist-Ice* ... 15
7.9 VarioSpace ... 16
7.10 Accessories ... 16

8 Maintenance ... 16
8.1 FreshAir carbon filter ... 16
8.2 Defrosting the appliance ... 16
8.3 Cleaning the appliance ... 17

9 Customer support ... 18
9.1 Technical specifications ... 18
9.2 Operating noises ... 18
9.3 Technical faults ... 19
9.4 Customer service ... 20
9.5 Rating plate ... 20

10 Decommissioning ... 20

11 Disposal ... 20
11.1 Preparing appliance for disposal ... 20
11.2 Disposing of the appliance in an environmentally friendly manner ... 20

The manufacturer is constantly working to improve all types and models. Therefore, please be aware that we reserve the right to make changes to the shape, equipment and technology.

Symbol	Explanation
	**Read instructions** Please read the information in these instructions carefully to understand all of the benefits of your new appliance.
	**Full instructions on the internet** The detailed instructions are available via the QR code on the front of these instructions, at **home.liebherr.com/fridge-manuals** or by entering the service number at **home.liebherr.com/fridge-manuals**. The service number can be found on the serial tag: 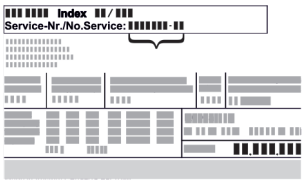 *Fig.* Example illustration
	**Check appliance** Check all parts for transport damage. If you have any complaints, please contact your agent or customer service.
	**Differences** These instructions apply to a range of models, so there may be differences. Sections that apply to certain models only are indicated by an asterisk (*).

Symbol	Explanation
▷ ▶	**Instructions and results** Instructions are marked with a ▶. Results are marked with a ▷.
▶	**Videos** Videos about the appliances are available on the YouTube channel of Liebherr-Hausgeräte.

These operating instructions apply to:

CN (sf) (sd) (e) (pc) (bb)(d)	50.. / 52.. / 57.. / 77..

Note
If your appliance has an N in its appliance designation, it is a NoFrost appliance.

1 The appliance at a glance

1.1 Delivered contents

Check all parts for damage during transport. If you have any complaints, please contact the dealer or Customer Service (see 9.4 Customer service) .

Delivery contains the following parts:

- Standalone appliance
- Equipment (depending on your model)
- Installation parts (depending on your model)
- “Quick Start Guide”
- “Installation Guide”
- Service brochure

1.2 Appliance and equipment overview

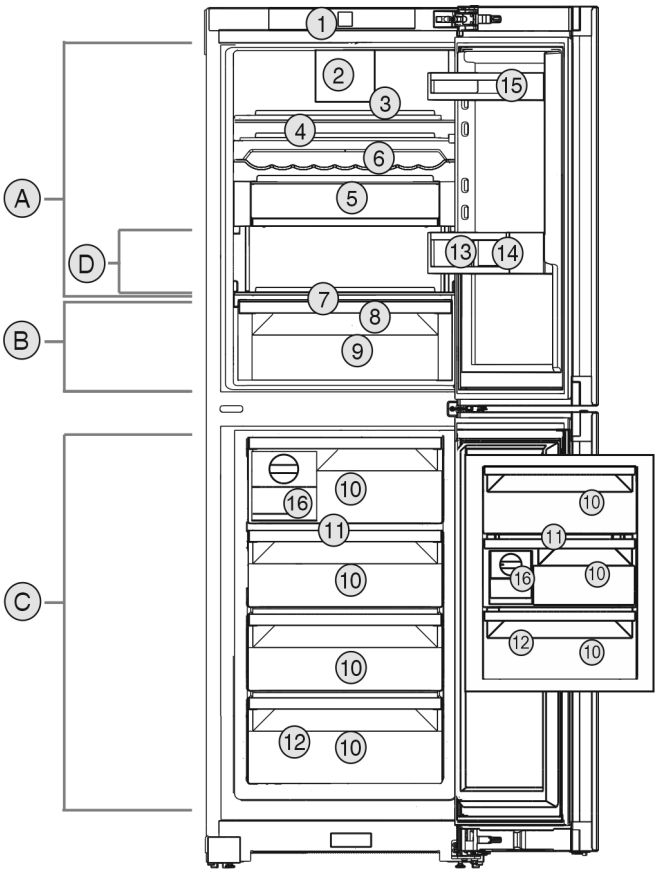

Fig. 1 Illustration example

Temperature range

(A) Fridge compartment
(B) EasyFresh
(C) Freezing compartment
(D) Coldest zone

Features

(1) Control elements
(2) Fan with FreshAir activated charcoal filter
(3) Split shelf*
(4) Shelf
(5) VarioSafe*
(6) Bottle shelf*
(7) Lid for EasyFresh safe
(8) Drain hole
(9) EasyFresh safe
(10) Freezer drawer
(11) VarioSpace
(12) Serial tag
(13) Bottle rack
(14) Bottle holder
(15) Can rack
(16) EasyTwist-Ice*

Note
▶ The shelves, drawers, and baskets are arranged for optimal energy efficiency in the factory configuration. However, changes to the arrangement within the given insertion options – for example the arrangement of shelves in the fridge compartment – have no effect on energy consumption.

1.3 Range of appliance use

Normal use

The appliance is only suitable for cooling food for residential or other similar environments. This includes the following types of uses

- in staff kitchens, bed and breakfasts,
- by guests in country homes, hotels, motels and other types of accommodations,
- for catering and similar wholesale services.

The appliance is not suitable as a built-in unit;

All other types of uses are not permitted.

Foreseeable misuse

The following uses are specifically prohibited:

- Storage and cooling of medication, blood plasma, laboratory preparations or similar substances and products in accordance with the Medical Device Directive 2007/47/EC
- Use in areas at risk of explosion

Incorrect appliance use can cause damage to the stored products or cause them to spoil.

Climate ratings

The appliance is set to operate within specific ambient temperature limits according to its climate rating The climate rating for your appliance is printed on the rating plate

Note

▶ To guarantee trouble-free operation, comply with the indicated ambient temperatures.

Climate rating	for ambient temperatures from
SN	10 °C to 32 °C
N	16 °C to 32 °C
ST	16 °C to 38 °C
T	16 °C to 43 °C

1.4 Conformity

The refrigerant circuit has been tested for leaks. The appliance complies with the applicable safety regulations and with the directives 2014/35/EU, 2014/30/EU, 2009/125/EC, 2011/65/EU, 2010/30/EU and 2014/53/EU.

The full text of the EU Declaration of Conformity is available on the following website: www.Liebherr.com

1.5 EPREL Database

Details about energy labeling and ecodesign requirements will be available on the European product database (EPREL) from March 1, 2021. You can access the product database at the following link: https://eprel.ec.europa.eu/ You will be asked to enter the model ID. You can find the model ID on the type plate.

2 General safety instructions

Please keep these operating instructions in a safe place so you can refer back to them at any time.

If you pass the appliance on, please hand these operating instructions to the new owner.

Read these operating instructions before use in order to use the appliance safely and correctly. Follow the instructions, safety instructions and warning messages included at all times. They are important for ensuring you can operate and install the appliance safely and without any problems.

Dangers for the user:

- This appliance can be operated by children as well as by persons with reduced physical, sensory or mental capabilities or lack of experience and knowledge if they are supervised or have been instructed in the safe use of the appliance and understand the associated risks. Children must not play with the appliance. Cleaning and user maintenance must not be performed by children unless they are supervised. Children between the ages of 3 and 8 may load and unload the appliance. Children under the age of 3 must be kept away from the appliance if they are not constantly supervised.
- The socket must be easily accessible so that the appliance can be disconnected quickly from the electricity in an emergency. It must not be located in the area behind the appliance.
- When disconnecting the appliance from the outlet, always take hold of the plug. Do not pull on the cable.
- Disconnect the power plug or switch off the power if a fault occurs.
- Do not damage the mains power line. Do not operate the appliance from a defective mains power line.
- Repairs and work on the appliance may only be carried out by after sales service or other specifically trained qualified personnel.
- The appliance should only be assembled, connected and disposed of in accordance with the instructions.

Risk of fire:

- The refrigerant contained within the appliance (specifications on the rating plate) is environmentally friendly, but flammable. Leaking refrigerant can ignite.
  - Do not damage the pipes of the refrigerant circuit.
  - Do not handle ignition sources inside the appliance.
  - Do not use electrical devices inside the appliance (e.g. steam cleaners, heaters, ice cream makers, etc.).
  - If refrigerant leaks: Remove naked flames or ignition sources located near the area of the leak. Air the room well. Contact the customer service department.
- Do not store explosive materials or spray cans with flammable propellants, such as e.g. butane, propane, pentane, etc. in the appliance. You can recognize such spray cans by the printed contents or a flame symbol. Any

leaking gasses can be ignited by electrical components.
- Keep burning candles, lamps and other objects with open flames away from the appliance so that they do not set it on fire.
- Alcoholic beverages or other containers holding alcohol must always be tightly sealed for storage purposes. Any leaking alcohol can be ignited by electrical components

Tipover hazard:

- Do not stand or climb on the base, drawers, doors, etc. This applies in particular to children.

Risk of food poisoning:

- Do not consume food that has passed its best before date.

Danger of frostbite, feelings of numbness and pain:

- Avoid prolonged skin contact with cold surfaces or chilled/frozen food or take protective measures, e.g. wear gloves.

Risk of injury and damage:

- Hot steam may lead to injuries. Do not use any electrical heating or steam cleaning equipment, naked flames or defrosting sprays for defrosting
- Do not remove ice with sharp objects

Risk of crushing:

- Do not hold onto the hinge when opening and closing the door. Fingers may get caught.

Symbols on the device:



The symbol can be on the compressor. It refers to the oil in the compressor and refers to the following danger: Can be lethal if swallowed or inhaled. This notice only applies for recycling. There is no danger during normal operation.



The symbol is located on the compressor and indicates the danger of inflammable materials. Do not remove the label.



This label or a similar one can be located on the rear of the appliance. It refers to the foamed-in panels in the door and/or the housing. This notice only applies for recycling. Do not remove the label.

Observe the warning messages and other detailed information in the other sections:

⚠	DANGER	indicates a hazardous situation, which if not avoided, will result in death or serious injury.
⚠	WARNING	indicates a hazardous situation, which if not avoided, could result in death or serious injury.
⚠	CAUTION	indicates a hazardous situation, which if not avoided, will result in minor or moderate injury.
	NOTICE	indicates a hazardous situation, which if not avoided, could result in damage to property.
	Note	indicates useful advice and tips.

3 Start-up

3.1 Turning on the appliance

Make sure that the following requirements are met:

❑ Appliance is set up and connected according to installation instructions.
❑ All adhesive strips, adhesive and protective films, as well as transport safety devices in and on the appliance are removed.
❑ All advertising material has been removed from the drawers.

▶ Switch on the appliance using the control panel next to the display.

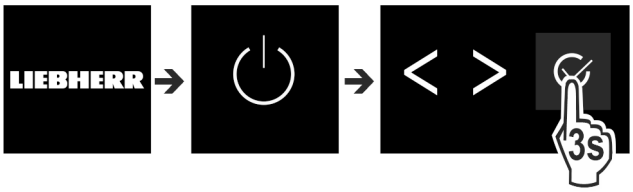

Fig. 2

▶ The status screen appears.
▶ If the DemoMode is displayed after switching on the appliance, the DemoMode can be deactivated within the next 5 minutes.

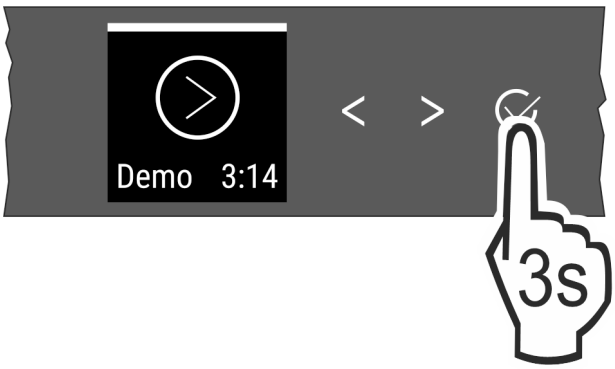

Fig. 3

▶ Press the confirmation button next to the display for 3 seconds.
▷ DemoMode is deactivated.

Note

The manufacturer recommends:

▶ Putting away groceries: Wait approx. 6 hours until the set temperature has been reached.
▶ Store **frozen produce** at -18 °C or colder.

3.2 Insert the equipment

▶ Insert the supplied equipment to help you make the most of the appliance.
▶ Purchase the SmartDevice Box and insert it (see smartdevice.liebherr.com).
▶ Install the SmartDevice app (see apps.home.liebherr.com).

Note
You can purchase accessories from the Liebherr household appliance store (home.liebherr.com).

4 Food management

4.1 Storing food

WARNING
Danger of fire
▶ Do not use electrical appliances inside the food storage compartments of the appliance, unless they are of the type recommended by the manufacturer.

Note
Insufficient ventilation results in an increase in energy consumption and reduction of the refrigerating performance
▶ Always keep the air slots unobstructed.

When storing food, remember these basic rules:
- ❑ Do not obstruct the air vents on the back wall.
- ❑ Food is well sealed.
- ❑ Food that easily absorbs or emits odor or taste, are in sealed containers or are covered.
- ❑ Raw meat or fish is in clean, sealed containers so that other food cannot be touched or drip on them.
- ❑ Liquids are in sealed containers.
- ❑ Food is stored spaced apart to ensure good air circulation.

Note
Failure to follow these guidelines can lead to food perishing.

4.1.1 Fridge

The natural air circulation means the temperature varies in different sections.

Arranging the food:
▶ In the top section and in the door: butter and cheese, preserves, and tubes.
▶ The coldest zone *Fig. 1 (D)* is for: easily perishable food such as prepared meals, meat and sausages
▶ On the bottom shelf: raw meat and fish

4.1.2 EasyFresh-Safe

This compartment is for unsealed food, including fruit and vegetables.

The humidity depends on the moisture content of the stored items and how frequently the door is opened. You can regulate the moisture.

Arranging the food:
▶ Place unsealed fruit and vegetables.
▶ Excessive moisture: Regulate the air humidity (see 7.7 Humidity control) .

4.1.3 Freezer

This provides a dry, frosty storage climate at -18 °C. A frosty climate is suitable for storing frozen food and goods for several months, preparing ice cubes, or freezing fresh food.

Freezing food

You can freeze as many kilograms of fresh food within 24 hours as indicated on the nameplate (see 9.5 Rating plate) under "freezing capacity ... kg/24h".

To ensure that the food freezes quickly to the core, keep to the following quantities per pack:
- Fruit, vegetables up to 1 kg
- Meat up to 2.5 kg

Before freezing, please note the following:
- ❑ SuperFrost is activated (see 6.3 Functions) when the amount of food to freeze exceeds approx. 2 kg.
- ❑ With a small volume of frozen goods: SuperFrost is activated approx. 6 hours prior.
- ❑ With the maximum volume of frozen goods: SuperFrost is activated approx. 24 hours prior.

Arranging the food:

CAUTION
There is a risk of injury from pieces of broken glass!
Bottles and cans containing drinks can split or crack when frozen. This applies in particular to carbonated drinks.
▶ The *BottleTimer* function must be used when freezing bottles and cans with drinks.

With a small amount of frozen goods:
▶ Place packaged groceries in the top drawer.
▶ If possible, place groceries at the back of the drawer near the rear wall.
With the maximum amount of frozen goods:
▶ Distribute packaged groceries across all drawers, but do not place any groceries in the lowest drawer.
▶ If possible, place groceries at the back of the drawer near the rear wall.
With the maximum amount of frozen goods:
▶ Once SuperFrost activates automatically, place food into the drawer.

Defrosting food
- in the fridge compartment
- in the microwave
- in the oven/fan oven
- at room temperature

WARNING
Danger of food poisoning!
▶ Do not re-freeze defrosted food.

▶ Remove only the food you need for now.
▶ Use defrosted food as quickly as possible

4.2 Storage times

The storage times given are guidelines

Food with a “use by” date must still be consumed by the date indicated on the package

4.2.1 Fridge

The best-before date stated on the packaging applies.

4.2.2 Freezer

Guidelines for storage periods for various foods		
Ice cream	at -18 °C	2 to 6 months
Sausage, ham	at -18 °C	2 to 3 months
Bread, bakery products	at -18 °C	2 to 6 months
Game, pork	at -18 °C	6 to 9 months
Fish, fatty	at -18 °C	2 to 6 months

Guidelines for storage periods for various foods		
Fish, lean	at -18 °C	6 to 8 months
Cheese	at -18 °C	2 to 6 months
Poultry, beef	at -18 °C	6 to 12 months
Vegetables, fruit	at -18 °C	6 to 12 months

5 Energy saving

- Always ensure good ventilation. Do not obstruct ventilation openings or grilles.
- Never block air slits in the fan.
- Do not install the appliance in direct sunlight or next to a stove, heater or similar heat source.
- Energy consumption depends on installation conditions such as the ambient temperature (see 1.3 Range of appliance use) . A warmer ambient temperature can increase the energy consumption.
- Avoid opening the appliance door for any longer then necessary
- The lower the temperature is set the higher the energy consumption.
- Sort your food items: home.liebherr.com/food.
- All food stored in the appliance should be well wrapped and covered. This prevents frost buildup.
- Only take food out for as long as necessary so that it does not get too warm.
- Insertion of warm foods: first let the food cool down to room temperature.
- Defrost frozen food in the fridge
- For longer periods of absence, use HolidayMode (see HolidayMode) .

6 Use

6.1 Controls and displays

The display provides a quick overview of the temperature setting and the status of functions and settings. You can control the functions and settings either by deactivating/activating them or by selecting a value.

6.1.1 Status display

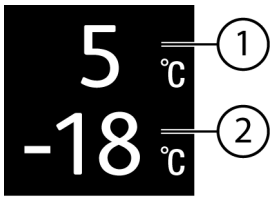

Fig. 4

(1) Fridge compartment temperature display

(2) Freezer compartment temperature display

6.1.2 Navigation

Navigate in the menu to access the individual functions. An audible signal sounds after confirming a function or setting. If no selection is made after 10 seconds the display switches to the Status display.

The appliance is operated with the buttons next to the display.



Fig. 5

(1) Left/right navigation arrow

(2) Confirm

Left/right navigation arrow *Fig. 5 (1)*:

- Navigating in the menu. After the last menu page, it goes back to the first one.

Confirm *Fig. 5 (2)*:

- Activating/deactivating a function.
- Opening a submenu.
- Confirming a selection. After confirmation the display switches back to the menu.

Back to the Status display: in the fastest possible manner:

- Close and open the door.
- or wait 10 seconds. The display changes to the Status display.

6.1.3 Operating structure

The controls are explained by a template. The display changes depending on the function or settings.

Menu without submenu

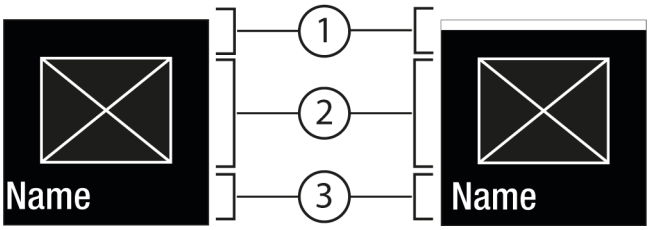

Fig. 6

(1) Status deactivated / status activated white bar in the top area

(2) Symbol or selected value

(3) Menu: Function name or menu: Setting name

Menu with submenu

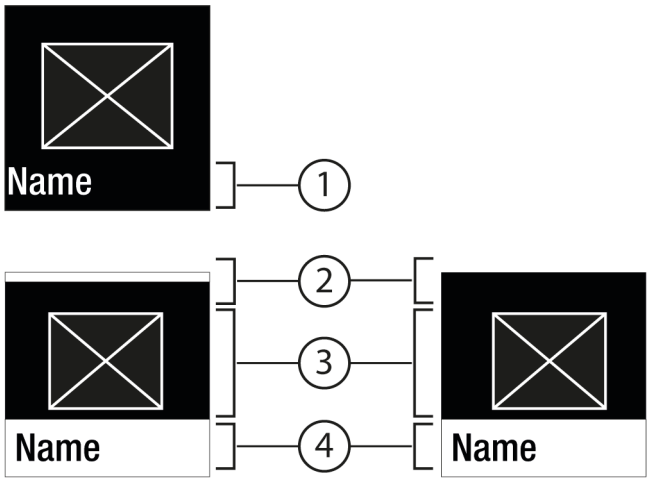

Fig. 7

(1) Menu: Function name or menu: Setting name

(2) Status

(3) Symbol or selected value

(4) Submenu: Function name or submenu: Setting name

(2) Off / On

You can navigate as follows:

- Navigate with the left/right navigation arrow *Fig. 5 (1)*.
- Press Confirm *Fig. 5 (2)* to go to the submenu *Fig. 7 (4)*.
  - Navigate with the left/right navigation arrow *Fig. 5 (1)*.
  - Set new level: Press Confirm *Fig. 5 (2)* to select a deselected value *Fig. 6 (1)*.
  - Back to menu: Press Confirm *Fig. 5 (2)* to select the selected value *Fig. 6 (2)*.

6.1.4 Display symbols

The display symbols provide information about the current appliance status.

Symbol	Appliance status
	**Standby** The appliance or temperature zone is turned off.
	**Flashing number** Appliance is working. Temperature flashes, until the set value is reached.
	**Flashing symbol** Appliance is working. Setting is made.
	**Bar grows steadily** Function is activated.

6.2 Operating logic

6.2.1 Activating/deactivating settings

You can activate/deactivate the following functions:

Symbol	Function
	SuperCool[x]
	SuperFrost[x]
	PartyMode[x]
	HolidayMode
	E-Saver

[x] When a function is on, the appliance works harder. This means the appliance could make louder noises and consume more energy.

▶ Press the navigation arrows *Fig. 5 (1)* until appears.
▶ Press Confirm *Fig. 5 (2)*.
▷ You hear the confirmation tone.
▷ Status appears in the menu.
▷ Function is on/off.

6.2.2 Selecting function value

With the following functions you can set a value in the submenu:

Symbol	Function
	**Cool:** Setting the temperature Turn on/off the temperature zone
	**Freeze:** Setting the temperature Switch the appliance on/off

▶ Press the navigation arrows *Fig. 5 (1)* repeatedly until the function is displayed.
▶ Press Confirm *Fig. 5 (2)*.
▶ Select the setting value with the navigation arrows *Fig. 5 (1)*.

Setting the temperature

▶ Press *Fig. 5 (2)* confirm.
▷ You hear the confirmation tone.
▷ Status: on *Fig. 6 (1)* appears briefly in the submenu *Fig. 7 (4)*.
▷ Display switches back to the menu.

Switching the temperature zone on/off

▶ Press Confirm for 3 seconds.
▷ You hear the confirmation tone.
▷ Display returns to the status screen.

6.2.3 Activating/deactivating settings

You can activate/deactivate the following settings:

Symbol	Setting
	WiFi[1]
	Entry lock[2]
	SabbathMode[2]
	Reminders[1]
	Reset[2]
	Switch off [2]

▶ Press the navigation arrows *Fig. 5 (1)* repeatedly until the settings  are displayed.
▶ Press Confirm *Fig. 5 (2)*.
▶ Press the navigation arrows *Fig. 5 (1)* repeatedly until the desired setting is displayed.

[1] **Activate setting (short press)**

▶ Press Confirm *Fig. 5 (2)*.
▷ You hear the confirmation tone.
▷ Status appears in the menu.
▷ Setting is activated / deactivated.

[2] **Activate setting (long press)**

▶ Press Confirm *Fig. 5 (2)* for 3 seconds.
▷ You hear the confirmation tone.
▷ Status appears in the menu.
▷ Display changes.

6.2.4 Calling up the customer menu

The customer menu provides the following settings:

Symbol	Function
	Software

▶ Press the navigation arrows *Fig. 5 (1)* repeatedly until the settings appear.
▶ Press Confirm *Fig. 5 (2)*.
▶ Press the navigation arrows *Fig. 5 (1)* repeatedly until appliance information appears in the display.
▶ Press Confirm *Fig. 5 (2)*.
▶ Enter the numerical code 151.
▷ The customer menu appears.
▶ Press the navigation arrows *Fig. 5 (1)* repeatedly until the desired setting appears.

[1] **Select the setting value**
▶ Press Confirm *Fig. 5 (2)*.
▷ You hear the confirmation tone.
▷ Status appears briefly in the display.
▷ The display switches back to the menu.

[2] **Activate setting**
▶ Press Confirm *Fig. 5 (2)* for 3 seconds.
▷ You hear the confirmation tone.
▷ Status appears in the display.
▷ The symbol flashes as long as the appliance is working.

6.3 Functions

Temperature

The temperature depends on the following factors:
- the number of times the door is opened
- The duration the door is opened
- the room temperature of the installation location
- the type, temperature and amount of food

Temperature zone	Recommended setting
Fridge	5 °C
Freezing compartment	-18 °C

Setting the temperature

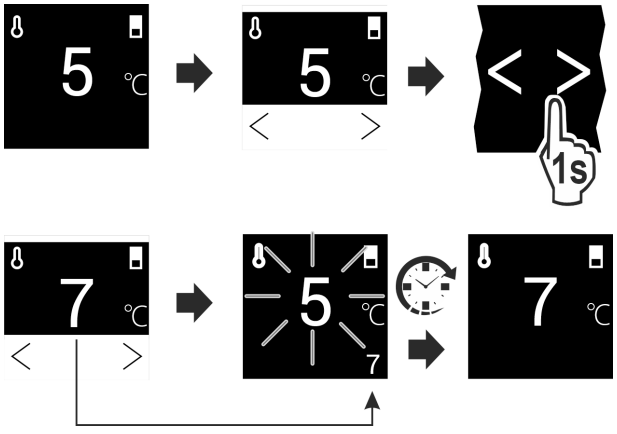

Fig. 8

▶ Set the value. (see 6.2 Operating logic) .
▷ The set temperature is shown on the bottom right of the display.

Switching off the temperature zone

The fridge section can be switched off separately.

When the freezer is switched off, all temperature zones are switched off.

▶ Set the value. (see 6.2 Operating logic) .
▷ appears.

SuperCool

Select this function for the maximum cooling setting, to reach lower cooling temperatures.

This function is relevant to the fridge section *Fig. 1 (A)*

Use:
- Cool large amounts of food quickly.

Activating/deactivating settings

▶ Using the fridge section: activate the function when you add the goods.
▶ Activating/deactivating (see 6.2 Operating logic) .

The function automatically turns off. The appliance goes back to normal mode. The temperature adjusts itself to the set level.

SuperFrost

Select this function for the maximum freezing setting, to reach lower freezing temperatures.

This function is relevant to the freezer section *Fig. 1 (C)*.

Use:
- To freeze more than 2 kg fresh food a day.
- Freezing fresh food quickly to the core.
- Increasing the cold reserves in the stored goods before defrosting the appliance.

Activating/deactivating settings

With a small volume of frozen goods:
▶ Activate 6 hours before use.
With the maximum volume of frozen goods:
▶ Activate 24 hours before use.
▶ Activating/deactivating (see 6.2 Operating logic) .

The function automatically turns off. The appliance goes back to normal mode. The temperature adjusts itself to the set level.

PartyMode

This option offers an assortment of special functions and settings that are useful if you are having a party.

The following functions are activated:
- *SuperCool*
- *SuperFrost*

You can set any functions you like. Your changes are lost when the option is switched off.

Activating/deactivating settings

▶ Activating/deactivating (see 6.2 Operating logic) .
▷ On: All functions are activated at the same time.
▷ Deactivated: Previously set temperatures are restored.

The function is automatically switched off after 24 hours.

HolidayMode

This function minimizes the energy consumption during an extended absence. The temperature of the refrigerator compartment is set to 15 °C and this is displayed on the status screen when the temperature has been reached.

The set freezer temperature remains unchanged.

This function is relevant to the fridge section *Fig. 1 (A)*.

Use:

- Save energy if you plan to be away for a while.
- Avoid coming home to bad smells and mold.

Activating/deactivating settings

▶ Empty everything from the fridge section.
▶ Activating/deactivating (see 6.2 Operating logic) .
▷ On: Fridge temperature is raised.
▷ Off: The previously set temperature is restored.

E-Saver

This function reduces energy consumption. If you activate this function, the cooling temperature increases.

Temperature zone	Recommended setting (see Temperature)	Temperature when E-Saver activated
5 ℃ Fridge compartment	5 °C	7 °C
-18 ℃ Freezing compartment	-18 °C	-16 °C

Use:

- Save energy.

Activating/deactivating settings

▶ Activating/deactivating (see 6.2 Operating logic) .
▷ Activated: Higher temperatures are set in all temperature zones.
▷ Deactivated: Previously set temperatures are restored.

6.4 Settings

Setting up the WLAN connection

This setting connects the appliance to the internet. The connection is managed in the SmartDevice Box. You can use the SmartDevice-App to add your appliance to a SmartHome-System. Use the SmartDevice-App or other compatible partner networks to enjoy advanced options and settings.

Note
The SmartDevice Box is available from the Liebherr Residential Appliances Store (https://home.liebherr.com/shop/de/deu/smartdevicebox.html).

More information about the availability, prerequisites and individual options can be found on the Internet at https://smartdevice.liebherr.com/install.

Use:

- Manage the appliance with the SmartDevice-App or a compatible partner network.
- Enjoy advanced functions and settings.
- Check the appliance status on the SmartDevice-App.

❑ Purchase the SmartDevice Box and insert it (see https://smartdevice.liebherr.com/install).
❑ Install the SmartDevice app (see https://apps.home.liebherr.com/).

Setting up the WLAN connection

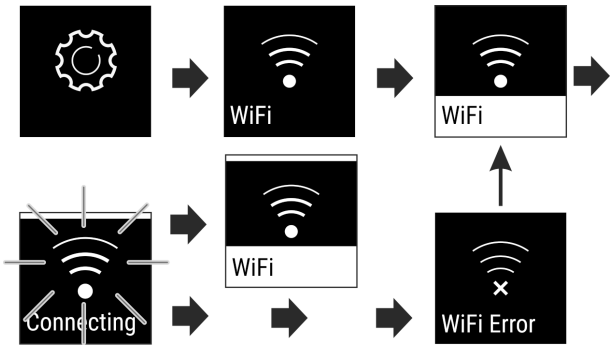

Fig. 9

▶ Activate (see 6.2 Operating logic) .
▷ The connection is set up: Status: on *Fig. 6 (1)* and WiFi connecting appears. The symbol flashes.
▷ The connection is set up: Status: on *Fig. 6 (1)* appears.
▷ The connection failed: Status and Connect appears. The symbol appears permanently.

Disconnecting

▶ Deactivate the setting (see 6.2 Operating logic) .

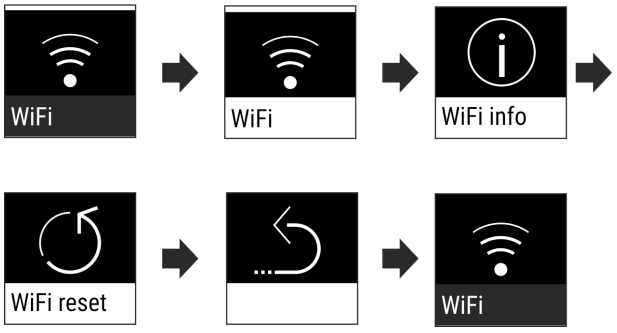

Fig. 10

▷ There is no connection: The symbol is displayed constantly.

Restoring the connection

▶ Restore settings (see 6.2 Operating logic) .

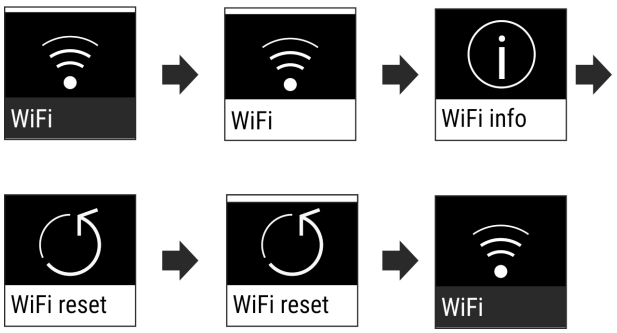

Fig. 11

▷ Connection and other settings are restored to factory settings.

Entry lock

This setting avoids accidental operation of the appliance, e.g. by children.

Use:

- Avoid unintentional changing of settings and functions.
- Avoid unintentional switching off of the appliance.
- Avoid unintentional temperature adjustments.

Activating/deactivating settings

▶ Activating/deactivating (see 6.2 Operating logic) .



Display brightness

With this setting, you can choose a brightness level for the display.

You can set the following brightness levels:

- 40%
- 60%
- 80%
- 100%

Choosing the setting

▶ Set the level (see 6.2 Operating logic) .

Door alarm

Set the time before the door alarm (see Close door) sounds.

Options are as follows:

- 1 min
- 2 min
- 3 min
- Off

Choosing the setting

▶ Set the level (see 6.5 Warnings) .

Temperature unit

This setting allows you to change between Celsius and Fahrenheit as the temperature unit.

Selecting the setting value

▶ Set the value (see 6.2 Operating logic) .

Info

This setting allows the appliance information to be read out as well as access to the customer menu.

It provides the following information:

- Model name
- Index
- Serial number
- Service number

View appliance data

▶ Press the navigation arrows *Fig. 5 (1)* repeatedly until the settings are displayed.
▶ Press Confirm *Fig. 5 (2)*.
▶ Press the navigation arrows *Fig. 5 (1)* repeatedly until the information display appears.
▶ Read the appliance data.

SabbathMode

This setting meets the religious requirements on the Sabbath and Jewish festivals. Turn on SabbathMode to switch off certain controls. This means you can use the appliance without anyone changing any settings.

You can find a list of Star-K-certified appliances at www.star-k.org/appliances.

WARNING

Danger of food poisoning!
If there is a power outage when SabbathMode is on, this message is not saved. When the power is restored, the appliance continues in SabbathMode. Afterwards, the temperature display does not show a message about the power outage.
If there was a power outage during SabbathMode:
▶ Check the quality of the food. Do not consume spoiled food!

What happens on the appliance when in SabbathMode:

- The Status display permanently shows SabbathMode.
- The display is locked for all functions apart from turning off SabbathMode.
- Any functions/settings that are already on, remain active.
- The display stays bright when the door is closed.
- Reminders are disabled. The set timer interval is also stopped. The function is no longer executed in SabbathMode.
- Reminders and warnings are not displayed. No acoustic signals are emitted and the display does not show warnings / settings such as temperature alarm or door alarm.
- The internal light is off.
- The defrost cycle only works for the specified time without taking account of fridge use.
- After a power cut the appliance automatically returns to SabbathMode.

Activating/deactivating SabbathMode

▶ To activate this function, click the arrows next to the display until you see the Settings menu item and then confirm. The menu shows the available settings.
▶ Click the arrows next to the display until you see the SabbathMode (Menora) symbol. Confirm the symbol.
▷ A white bar appears in the top part of the display.
▷ SabbathMode has been activated.

To deactivate this function, press the confirmation button next to the display for 3 seconds.

SabbathMode has been deactivated.

Reminder

Reminders are displayed acoustically by a beep and visually by a symbol in the display. The signal gets louder until the alert stops.

Replace the FreshAir active carbon filter

This message appears when the air filter needs replacing.
▶ Replace the air filter every six months.

▶ Confirm the message with OK.
▷ The service interval resets.
▷ The air filter guarantees the air quality in the fridge.

Activate setting

▶ Activating/deactivating (see 6.2 Operating logic) .

Reset

This function resets all settings to the factory settings. All settings that you have made thus far will be reset to their original values.

Activate the setting

▶ Activating (see 6.2 Operating logic) .

Turn off appliance

This setting turns off the whole appliance.

Switch off whole appliance

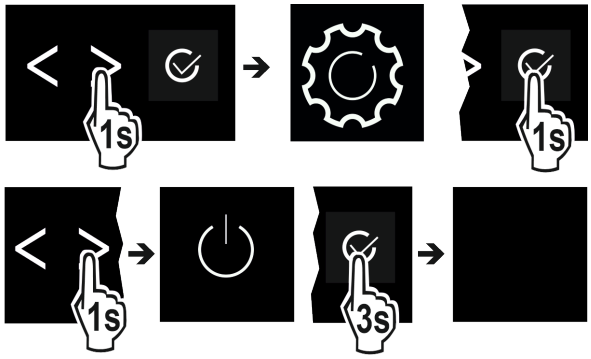

Fig. 12

▶ Activating/deactivating (see 6.2 Operating logic) .
▷ Off: Display turns black.

6.5 Warnings

Warnings are issued with an acoustic signal and visually with a symbol on the display. The signal gets louder until the alert stops.

6.5.1 Message

Close door

This message appears if the door is open too long.

You can set the time before this message appears .

▶ Stop alarm: Confirm the message.

-or-

▶ Close the door.

Power failure.

This message appears if the freezer temperature rises after a power outage. When the power outage is over, the appliance will continue to operate at the last temperature setting.

▶ Stop alarm: Confirm the message.
▷ Temperature alarm appears (see Temperature alarm) .

Temperature alarm

This message appears if the freezer temperature does not match the set temperature.

Temperature differences may be caused by:

- Hot fresh food was placed in the appliance.
- When sorting and removing food from the appliance, too much warm ambient air got in.
- There has been a prolonged power outage.
- The appliance is faulty.

When the cause is eliminated, the appliance will continue to operate at the last temperature setting.

▶ Confirm the display.
▷ Warmest temperature is displayed.
▶ Confirm the display again.
▷ The status display is displayed.
▷ Current temperature is displayed.

Error

This message appears when there is a fault with the appliance. An appliance component has an error.

▶ Open the door.
▶ Take note of the error code.
▶ Confirm the message.
▷ The acoustic warning ceases
▷ The display changes to the Status screen.
▶ Close the door.
▶ Contact Customer Service (see 9.4 Customer service) .

6.5.2 DemoMode

If “D” appears in the display, demo mode is on. This feature is designed for retailers. The cooling features are disabled.

Switching off DemoMode

When you see a time counting down:

▶ Confirm within the countdown.
▷ DemoMode is off.

If there is no countdown:

▶ Disconnect the power plug.
▶ Reconnect the power plug.
▷ DemoMode is off.

7 Equipment

7.1 Door racks

7.1.1 Moving/removing door racks

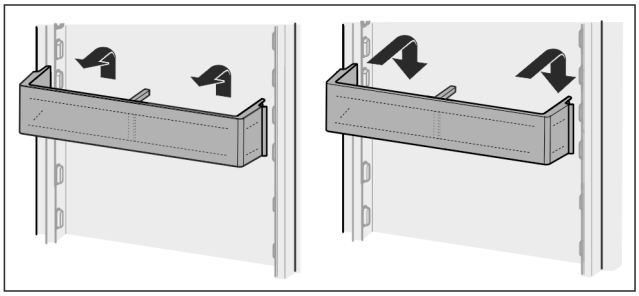

Fig. 13

▶ Slide racks up.
▶ Pull to the front.
▶ Re-insert in reverse order.

7.1.2 To dismantle door racks

The door racks can be disassembled for cleaning.

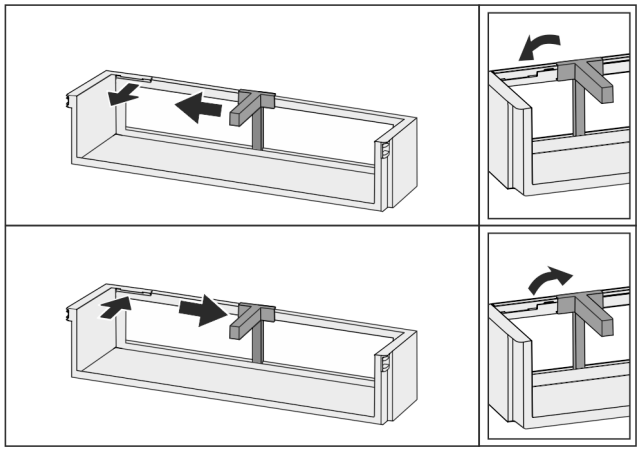

Fig. 14

▶ Disassemble the door racks.

7.2 Shelves

7.2.1 Moving/removing shelves

Extension stops secure the shelves against being accidentally pulled out

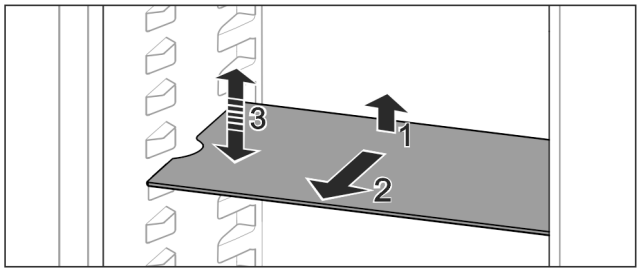

Fig. 15

▶ Lift the shelf and pull to the front.
▷ Side recess to shelf position.
▶ Reposition the shelf: Lift up or lower to the desired height and insert.

-or-

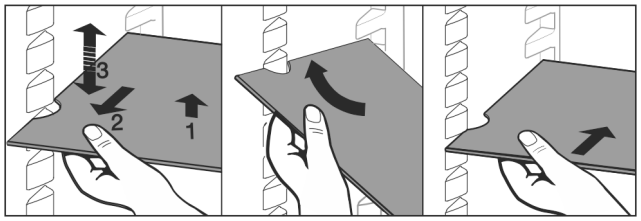

Fig. 16

▶ Take out the shelf completely: Pull out to the front.

▶ Easier removal: Set the shelf at an angle.
▶ Reinsert the shelf: Push it in to its stop limit.
▷ Pull-out stoppers are pointing down.
▷ Pull-out stoppers are behind the front shelf.

You can also remove the shelf above the EasyFresh compartments.

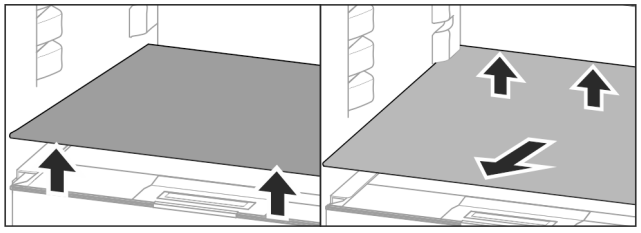

Fig. 17

To remove shelf

▶ Lift the shelf at the front and back.
▶ Remove from the front.

Do not place any goods on the drawer cover below!

Slide the shelf in:

▶ Place the shelf at an angle, with the back tilted downwards.
▷ Pull-out stoppers are pointing down.
▶ Slide the shelf into place.

7.2.2 Dismantling shelves

The shelves can be dismantled for cleaning.

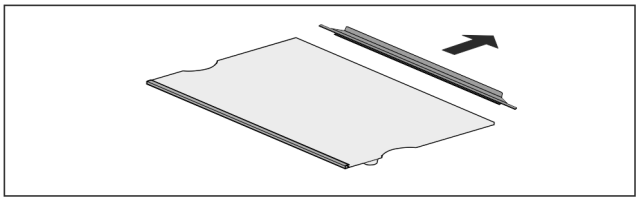

Fig. 18

▶ Disassemble the shelf.

7.3 Split shelf*

7.3.1 Using the split shelf

Extension stops secure the shelves against being accidentally pulled out

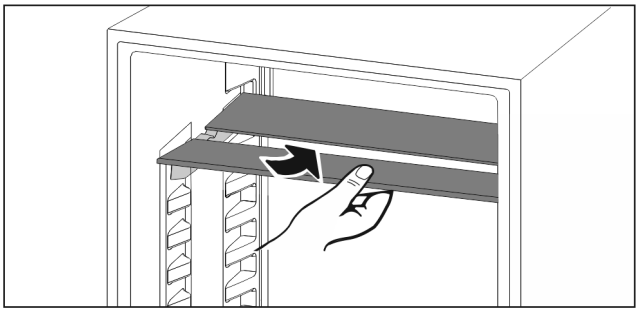

Fig. 19

▶ Push the split shelf underneath as in the illustration

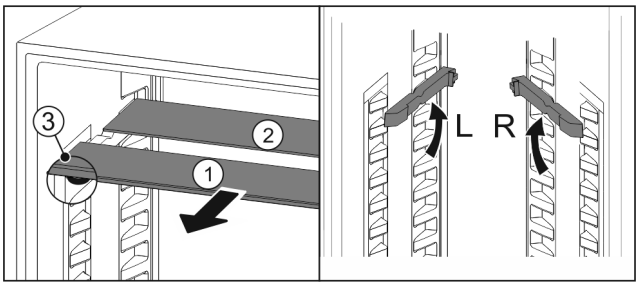

Fig. 20

Adjusting heights:

▶ Pull the glass panels out *Fig. 20 (1)* from the front, one at a time.
▶ Pull the support rails out of their retainers and snap into place at the height you want them.
▶ Slide in the glass panels one at a time.
▷ Flat pull-out stoppers at the front, right behind the support rail.
▷ Taller pull-out stoppers at the back.

Using both shelves:

▶ Hold the bottom glass panel with one hand and pull it to the front.
▷ The glass panel *Fig. 20 (1)* with the trim strip is at the front.
▷ The stops *Fig. 20 (3)* point downward.

7.4 VarioSafe*

The VarioSafe provides space for small food, packs, tubes, and jars.

7.4.1 Using the VarioSafe

You can remove the drawer and slide it back in at two different heights. This is to accommodate taller small items in the drawer.

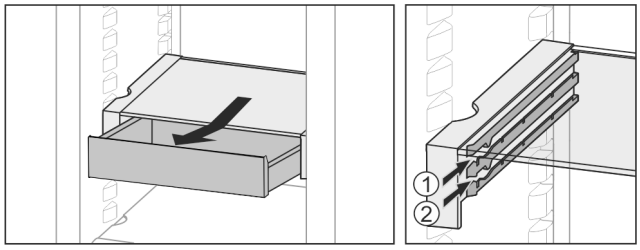

Fig. 21

▶ Remove the drawer.
▶ Slide in at any height *Fig. 21 (1)* or *Fig. 21 (2)*.

7.4.2 Moving the VarioSafe

You can shift the height of the entire VarioSafe unit.

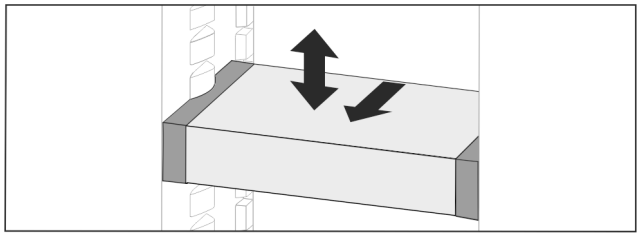

Fig. 22

▶ Pull to the front.
▷ Side recess to shelf position.
▶ Raise or lower to any height.
▶ Slide to the rear.

7.4.3 Removing the VarioSafe completely

You can remove the entire VarioSafe unit.

▶ Pull to the front.
▷ Side recess to shelf position.

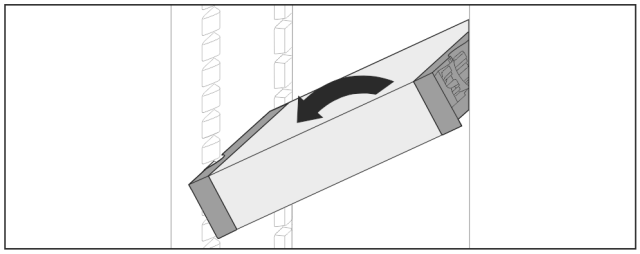

Fig. 23

▶ Tilt and pull to the front.

7.4.4 Disassembling the VarioSafe

The VarioSafe can be dismantled for cleaning.

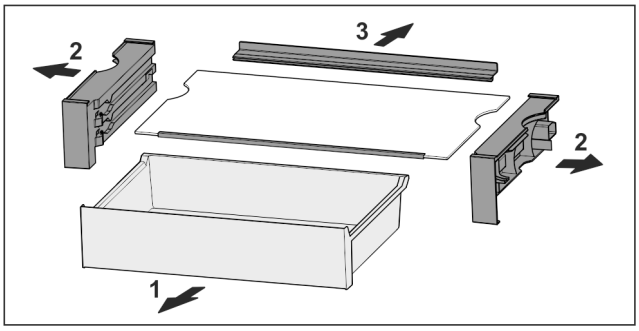

Fig. 24

▶ Dismantling the VarioSafe.

7.5 Drawers

You can remove the drawers for cleaning.

The shelves below can be used for storage until the drawers are replaced.

How the drawers are removed and inserted differs depending on the pull-out system. Your appliance can include a variety of pull-out systems.

Note
Insufficient ventilation results in an increase in energy consumption and reduction of the refrigerating performance.

▶ Leave the bottom drawer in appliance!
▶ Never obstruct the vents on the interior rear wall!

7.5.1 Remove the drawer

Drawer on glide rails

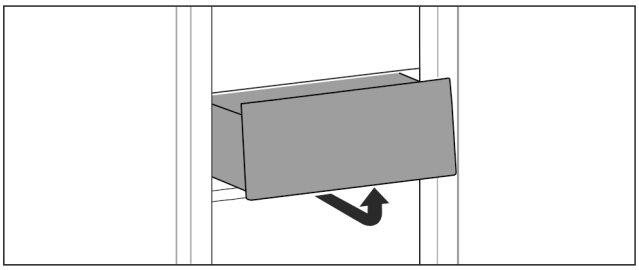

Fig. 25

▶ Remove the drawer as shown in the diagram.

7.5.2 Inserting the drawer

Drawer on glide rails

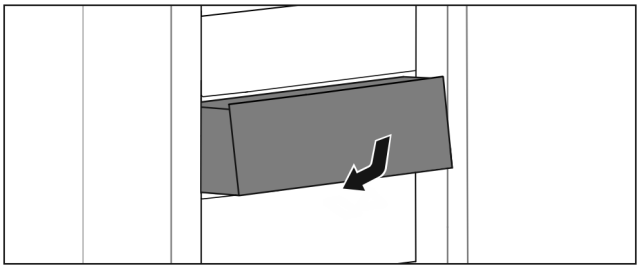

Fig. 26

▶ Insert the drawer as shown in the diagram.

7.6 EasyFresh-Safe

The compartment lid can be removed for cleaning.

7.6.1 Removing the compartment lid

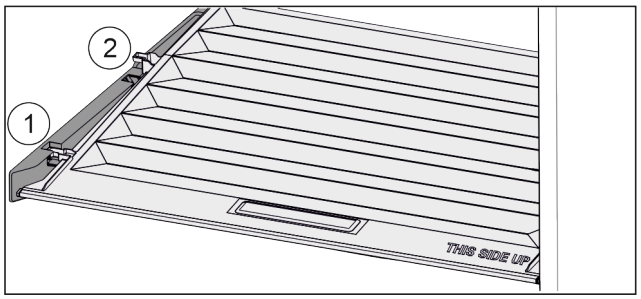

Fig. 27

If the drawers are removed:

▶ Pull the lid up at the front in the retaining parts to the opening *Fig. 27 (1)*.
▶ Lift from the back and pull it up and out *Fig. 27 (2)*.

7.6.2 Inserting the compartment lid

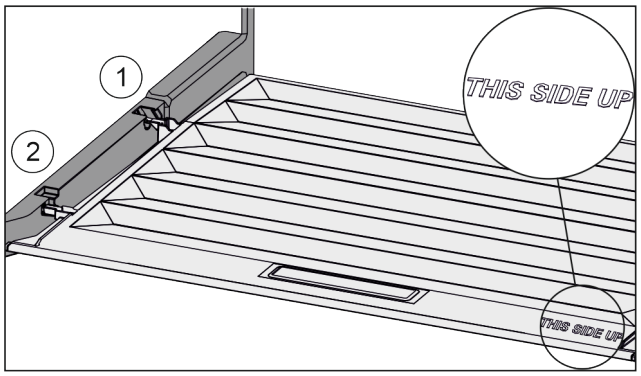

Fig. 28

If the text THIS SIDE UP is on top:

▶ Insert the lip of the cover over the opening of the rear bracket *Fig. 28 (1)* and click into place *Fig. 28 (2)*.
▶ Position the cover where you want it (see 7.7 Humidity control) .

7.7 Humidity control

You can regulate the moisture in the drawer yourself by adjusting the compartment cover.

The compartment cover is on the drawer itself and can be covered with shelves or additional drawers.

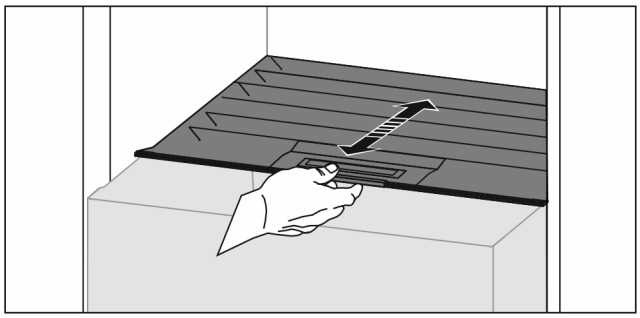

Fig. 29

Low air humidity

▶ Open the drawer.
▶ Pull the drawer cover to the front.
▷ If the drawer is closed: Gap between lid and compartment.
▷ Moisture levels lower in the Safe.

High air moisture:

▶ Open the drawer.
▶ Slide the compartment cover to the back.
▷ If the drawer is closed: The cover seals the compartment.
▷ Moisture levels rise in the Safe.

If there is too much moisture in the compartment:

▶ Choose a “low moisture setting”.

-or-

▶ Remove the moisture with a cloth.

7.8 EasyTwist-Ice*

The EasyTwist-Ice produces ice cubes when the water tank is inserted.

The EasyTwist-Ice is used exclusively for the production of ice cubes in standard household quantities.

Note
Do not change the position of the EasyTwist-Ice.

Make sure that the following conditions are met:

- The EasyTwist-Ice has been cleaned (see 8.3.4 Cleaning the EasyTwist-Ice*)
- The water tank has been cleaned.
- The EasyTwist-Ice drawer is fully inserted.

7.8.1 Filling the water tank

WARNING
Contaminated water!
Poisoning.
▶ Fill with potable water only.

NOTICE
Sugary liquids!
Damage to the EasyTwist-Ice.
▶ Fill with cold drinking water only.

Note
Using filtered, decarbonized water ensures the best-tasting drinking water for your ice cubes.
This water quality can be achieved using a table water filter of the kind available in trade retail outlets.
▶ Always fill the water tank only with filtered, decarbonized drinking water.

The water for the EasyTwist-Ice is supplied from a water tank.

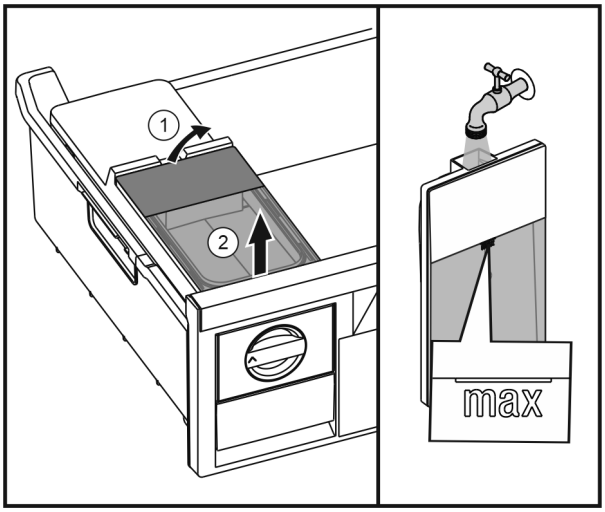

Fig. 30

▶ Lift up the water tank at the rear *Fig. 30 (1)* and take it out upwards *Fig. 30 (2)*.
▶ Fill with drinking water up to the mark.
▶ Insert the water tank by reversing the steps described above.

7.8.2 Producing ice cubes

The production capacity depends on the freezer temperature. The lower the temperature, the more ice cubes that can be produced in a certain period.

Maximum capacity of the ice cube drawer – 40 cubes (2x ice cube production).

Time required for ice cube production – at least 5 hours.

Releasing the ice cubes

▶ Turn the knob to the right to its stop limit.
▶ If necessary, repeat several times and turn the knob a little more.

7.9 VarioSpace

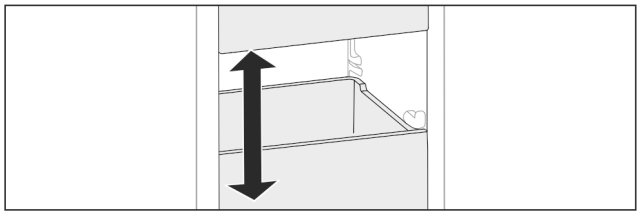

Fig. 31

You can remove drawers and glass panels from your appliance. This provides more room for large food items such as poultry, joints of meat, large game and bulky baked goods. You can then freeze these items whole for later preparation.

▶ Note the load limits on the drawers and glass panels (see 9.1 Technical specifications) .

7.10 Accessories

7.10.1 Bottle rack

Using the bottle rack

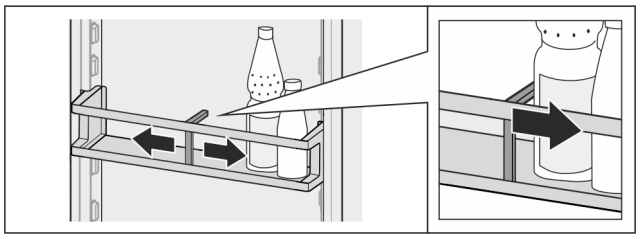

Fig. 32

▶ Slide the bottle rack at the edges.
▷ Stops bottles from tipping over.

Removing the bottle rack

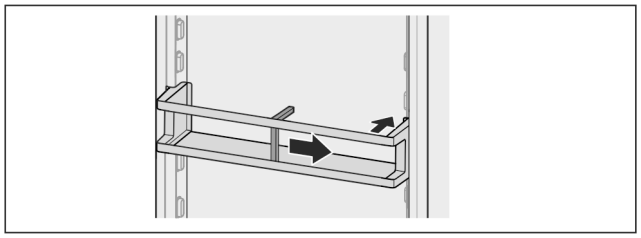

Fig. 33

▶ Slide the bottle rack all the way to the right edge.
▶ Remove to the back.

8 Maintenance

8.1 FreshAir carbon filter

The FreshAir carbon filter is located in the compartment above the fan.

It guarantees the best air quality.

❑ Change the carbon filter every 6 months.
With an active *Reminder*, a change prompt appears in the display.
❑ You can dispose of the carbon filter with the regular household waste.

Note

The FreshAir carbon filter is available for purchase from the Liebherr home appliance store (home.liebherr.com).

8.1.1 Removing the FreshAir carbon filter

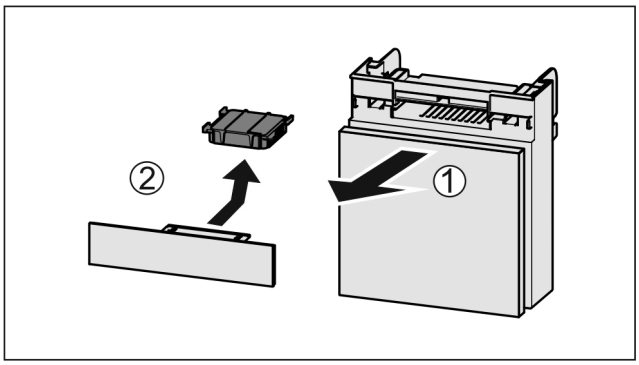

Fig. 34

▶ Pull out the compartment *Fig. 34 (1)*.
▶ Remove the carbon filter *Fig. 34 (2)*.

8.1.2 Inserting the FreshAir carbon filter

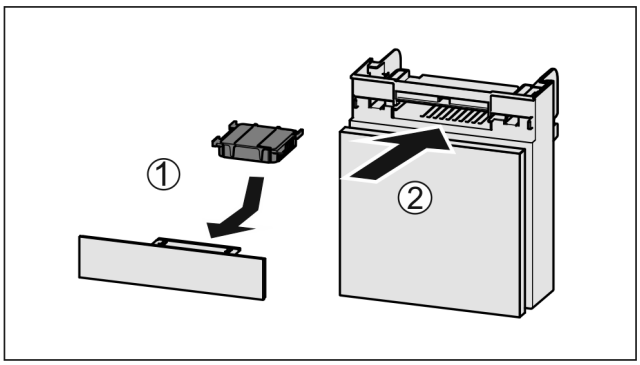

Fig. 35

▶ Insert the carbon filter as shown in the diagram *Fig. 35 (1)*.
▷ The carbon filter clicks into place.
If the carbon filter is pointing downwards:
▶ Push the compartment in *Fig. 35 (2)*.
▷ The carbon filter is now ready for use.

8.2 Defrosting the appliance

8.2.1 Defrosting the refrigerator compartment

Defrosting is performed automatically. The water from the thawing process runs out via the drain opening and is evaporated.

Water droplets or a thin layer of frost or ice can form on the rear wall; this is a completely normal part of the appliance's function. You do not have to remove them.

A frost or ice layer may form briefly due to the energy-optimized control of the appliance.

▶ Clean the drain opening regularly (see 8.3 Cleaning the appliance) .

8.2.2 Defrosting the freezer compartment with NoFrost

Defrosting is performed automatically by the NoFrost system. The moisture condenses on the evaporator and is periodically defrosted and evaporated.

The appliance does not have to be defrosted.

8.3 Cleaning the appliance

8.3.1 Preparation

WARNING
Danger of electric shock.
▶ Unplug refrigerator or disconnect power.

WARNING
Danger of fire
▶ Do not damage the refrigerant circuit.

▶ Empty appliance.
▶ Pull out the power plug.

8.3.2 Cleaning the housing

NOTICE
Improper cleaning!
Damage to the appliance.
▶ Only use soft cleaning cloths and ph-neutral all-purpose cleaners.
▶ Do not use steel wool or sponges that scour or scratch.
▶ Do not use caustic or abrasive cleaning materials or those containing sand, chloride, or acids.

WARNING
Risk of injury or damage due to hot steam.
Hot steam can cause scalding/burns and damage to surfaces.
▶ Do not use steam cleaners.

▶ Wipe the housing down with soft, clean cloth. If very dirty, use lukewarm water with a neutral cleaner. Glass surfaces can also be cleaned with glass cleaner.

8.3.3 Cleaning the interior

NOTICE
Improper cleaning!
Damage to the appliance.
▶ Only use soft cleaning cloths and ph-neutral all-purpose cleaners.
▶ Do not use steel wool or sponges that scour or scratch.
▶ Do not use caustic or abrasive cleaning materials or those containing sand, chloride, or acids.

▶ Plastic surfaces: clean by hand with a soft clean cloth, lukewarm water and a little detergent.
▶ Metal surfaces: clean by hand with a soft clean cloth, lukewarm water and a little detergent.
▶ Drain outlet *Fig. 1 (8)*: Remove any deposits with a thin item such as a cotton bud.

8.3.4 Cleaning the EasyTwist-Ice*

Cleaning must be conducted in the following situations:

❑ Operating for the first time
❑ Non-use for longer than 48 hours
❑ When the appliance requires cleaning

When operating for the first time, longer periods of disuse and when the appliance requires cleaning

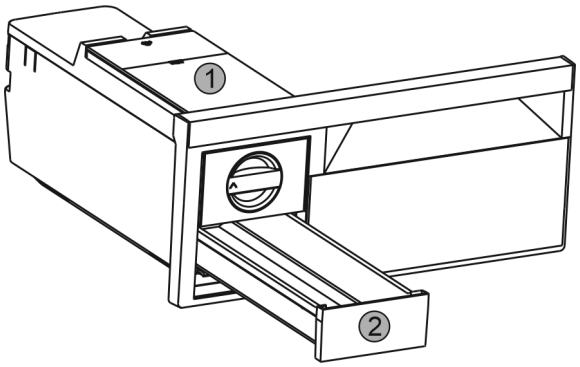

Fig. 36

▶ Take out the water tank *Fig. 36 (1)* and ice cube drawer *Fig. 36 (2)*.
▶ Take out the freezer drawer with EasyTwist-Ice.

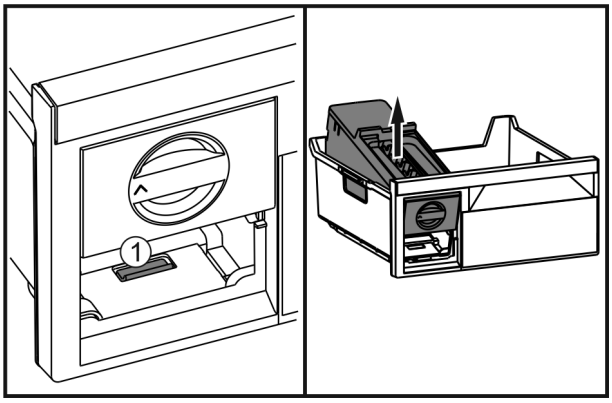

Fig. 37

▶ Press the lug *Fig. 37 (1)*, lift up the EasyTwist-Ice at the back and take it out of the freezer drawer.

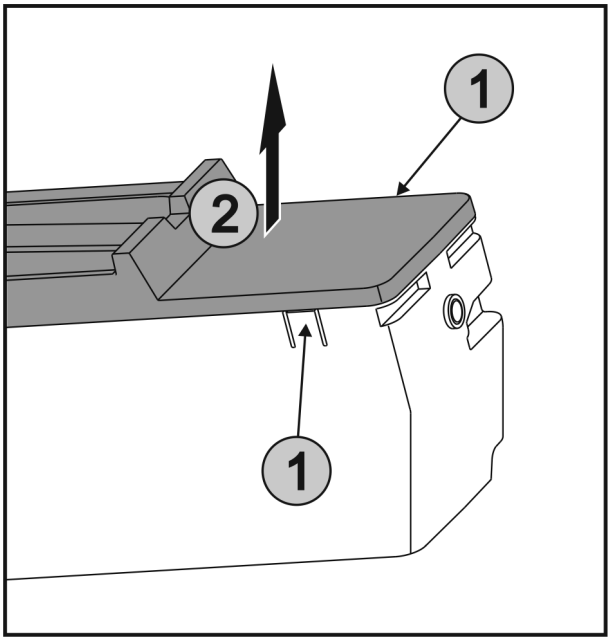

Fig. 38

▶ Press the lugs *Fig. 38 (1)* on both sides of the EasyTwist-Ice simultaneously and take off the cover *Fig. 38 (2)* upwards.

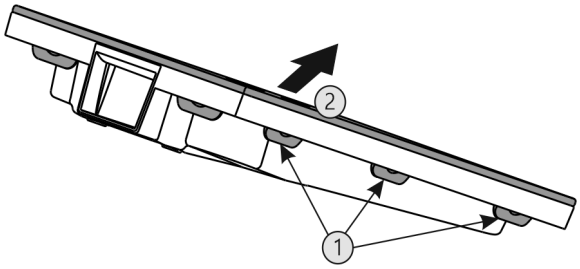

Fig. 39

▶ Press all lugs *Fig. 39 (1)* one after another and remove the cover *Fig. 39 (2)*.
▶ Clean the Ice cube drawer, water tank and EasyTwist-Ice with water and a little detergent.
▶ Assemble the EasyTwist-Ice.

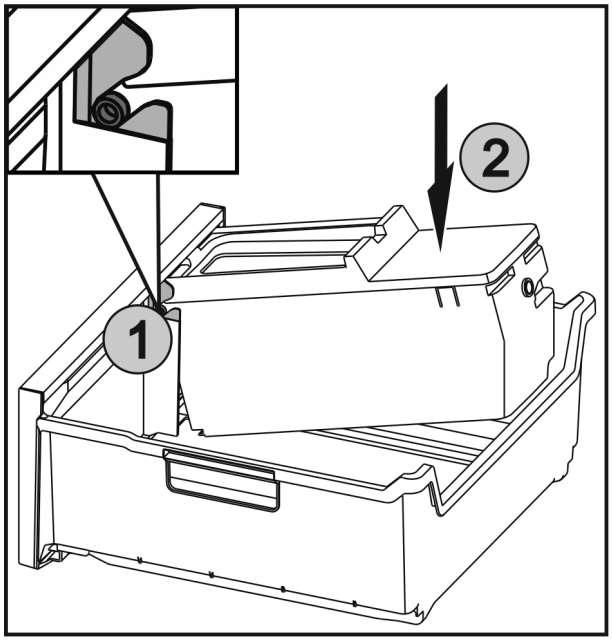

Fig. 40

▶ Insert the axles *Fig. 40 (1)* on the EasyTwist-Ice in the guides and push the rear side *Fig. 40 (2)* until the lug engages.
▶ Push in the EasyTwist-Ice drawer.

WARNING
Contaminated water!
Poisoning.
▶ Fill with potable water only.

▶ Fill the water tank and insert it. (see 7.8.1 Filling the water tank)

With unfiltered water:
▶ Dispose of ice cubes that were produced within 24 hours of the first ice cube production.

With filtered water:
▶ Dispose of ice cubes that were produced within 48 hours of the first ice cube production.

8.3.5 After cleaning

▶ Wipe dry the appliance and items of equipment
▶ Connect and switch on the appliance.
▶ Activate SuperFrost (see 6.3 Functions) .
When the temperature is sufficiently cold
▶ Place the food inside.
▶ Repeat cleaning regularly.

9 Customer support

9.1 Technical specifications

Temperature zone	
Cool:	2 °C to 9 °C
Freezing	-26 °C to -15 °C

Maximum freezing capacity / 24 hrs	
Freezer	See nameplate, “Freezing capacity … / 24h”

Ice cube production with EasyTwist-Ice*	
Time required at -18 °C	approx. 5.5 h
Time required with SuperFrost activated	approx. 3 h

Lighting	
Energy efficiency class[1]	Light source
This product contains an energy efficiency class G light source	LED

1 The appliance may contain light sources with different energy efficiency classes. The lowest energy efficiency class is indicated.

9.2 Operating noises

The appliance makes noises while in operation.

- At **less cooling output** the appliance saves energy but takes longer to cool items. The volume is **lower**.
- At **a higher cooling output** the food cools more quickly. The volume is **higher**.

Examples:

- Activated functions (see 6.3 Functions)
- Running fan
- Freshly sorted food
- High ambient temperature
- Door opened for long periods

Noise	Possible cause	Type of noise
Bubbling and splashing	Coolant is flowing into the cooling circuit.	Normal noise
Spitting and hissing	Coolant is spraying into the cooling circuit.	Normal noise
Humming	The appliance cools. The volume depends on the cooling output.	Normal noise
Whirring and murmuring	The fan is running.	Normal operating noise
Clicking	Components are being switched on and off.	Normal switching noise
Rattling or humming	Valves are active.	Normal switching noise

*** Depending on model and options**

Noise	Possible cause	Type of noise	How to resolve
Vibration	Unsuitable setup	Error noise	Adjust the feet to make sure the appliance is horizontal.
Clattering	Equipment, Objects inside the appliance	Error noise	Secure equipment parts. Leave a gap between items.

9.3 Technical faults

Your appliance is designed and manufactured for reliable operation and a long service life. If a malfunction nonetheless occurs during operation, please check whether the malfunction is due to an operating error. In this case, you will have to be charged for the costs incurred, even during the warranty period.

You may be able to rectify the following faults yourself.

9.3.1 Appliance function

Defect	Cause	Remedy
The appliance does not work.	→ The appliance is not switched on.	▶ Switch on the appliance.
	→ The power plug is not properly inserted in the wall socket.	▶ Check the power plug.
	→ The powerfuse in the wall socket is not OK.	▶ Check the fuse.
	→ Power failure.	▶ Keep the appliance closed. ▶ Protect your food: Lay freezer packs on top of the food or use another freezer if the power is off for a prolonged period. ▶ Do not re-freeze defrosted food.
	→ The appliance connector is not correctly inserted in the appliance.	▶ Check the appliance connector.
The temperature is not cold enough	→ This means that the door of the appliance is not closed properly	▶ Close the appliance door
	→ Insufficient ventilation	▶ Clear and clean the ventilation grille.
	→ The ambient temperature is too high	▶ Solution: (see 1.3 Range of appliance use) .
	→ The appliance was opened too frequently or for too long	▶ Wait to see whether the required temperature resets itself by itself. If not, contact Customer Service (see 9.4 Customer service) .
	→ Too much fresh food was placed inside without SuperFrost.	▶ Solution: (see SuperFrost)
	→ The temperature is incorrectly set	▶ Set to a colder temperature and check after 24 hours.
	→ The appliance is too near to a heat source (stove, heater etc).	▶ Change location of appliance or the heat source.
The door seal is defective or should be replaced for other reasons.	→ The door seal is interchangeable. You can replace it without the use of any special tools.	▶ Contact Customer Service (see 9.4 Customer service) .
The appliance is iced up or condensation is building.	→ The door seal may have slipped out of its groove.	▶ Check the door seal is well placed in the groove.
The outside surfaces of the appliance are hot*.	→ The heat of the refrigerant circuit is used to prevent condensate from forming	▶ This is normal.

9.3.2 Equipment

Defect	Cause	Remedy
	→ The appliance is not switched on.	▶ Switch on the appliance.

Defect	Cause	Remedy
The interior light does not turn on.	→ The door was open for longer than 15 min.	▶ The interior light automatically switches itself off if the door stays open for approx. 15 min.
	→ The LED interior light is faulty or the cover is damaged:	**WARNING** Risk of injury from electrical shock. Live parts are under the cover. ▶ The LED interior light should only be replaced or repaired by the Customer Service department or by engineers trained to do so.

9.4 Customer service

First check if you can fix the error yourself (see 9 Customer support) . If this is not the case, please contact customer service.

Please refer to the enclosed “Liebherr Service” brochure for the address.

WARNING
Unprofessional repair!
Injuries.
- ▶ Repairs and work on the appliance and the power supply cable not described in the Manual (see 8 Maintenance) should only be carried out by a qualified service provider.
- ▶ A damaged power cable may only be replaced by the manufacturer, the manufacturer’s Customer Service or a similarly qualified person.
- ▶ For appliances with an IEC connector, the change can be made by the customer.

9.4.1 Contact Customer Service

Make sure to have the following appliance information to hand:

- ❑ Appliance name (model and index)
- ❑ Service no. (service)
- ❑ Serial no. (S no.)

▶ Showing appliance info on the display (see Info) .
-or-
▶ Referring to appliance info on the nameplate (see 9.5 Rating plate) .

▶ Take note of the appliance information.
▶ Inform Customer Service: Tell us the problem and the appliance details.
▷ This will help us give you fast and accurate support.
▶ Further instructions from customer service will follow.

9.5 Rating plate

The nameplate is located behind the drawers on the inside of the appliance.

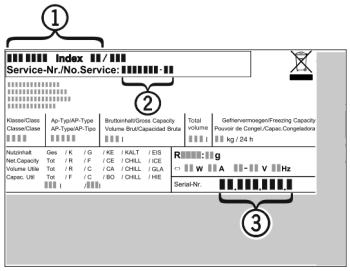

Fig. 41

(1) Appliance name
(2) Service no.
(3) Serial no.

▶ Information from the nameplate.

10 Decommissioning

- ▶ Empty appliance.
- ▶ Switch off the appliance (see 6.4 Settings) .
- ▶ Pull out the power plug.
- ▶ Remove the appliance connector if necessary: Pull it out and, at the same time, move it from the left to the right.
- ▶ Clean the appliance (see 8.3 Cleaning the appliance) .
- ▶ Leave the door open to prevent bad smells

11 Disposal

11.1 Preparing appliance for disposal



Liebherr uses batteries in some of its appliances. In the EU, for environmental reasons, legislation obliges the end user to remove these batteries before disposing of the old appliances. If your appliance contains batteries, a corresponding notice is attached to the appliance.

Lamps — If you can remove the lamps yourself without destroying them, also remove these before disposal.

- ▶ Take the appliance out of operation.
- ▶ Appliance with batteries: Remove the batteries. For description, see **Maintenance** chapter.
- ▶ If possible: Remove lamps without destroying them.

11.2 Disposing of the appliance in an environmentally friendly manner



The appliance still contains valuable materials and must be collected separately from unsorted municipal waste so it can be recycled.





Dispose of batteries separately from the old appliance. You can do this by returning the batteries free of charge to retailers or taking them to recycling centers and collection centers for recyclable materials.

Lamps — Dispose of removed lamps via the respective collection systems.

For Germany:	You can dispose of the appliance free of charge via the class 1 collection containers at the local recycling and recyclable material collection centers. When purchasing a new fridge/freezer, if the sales area > 400 m^2, retailers will also take back the old appliance free of charge.

WARNING

Leaking refrigerant and oil!

Fire. The refrigerant contained within the appliance is environmentally friendly, but flammable. The oil contained within the appliance is flammable. Escaping refrigerant and oil can ignite if they are of high enough concentration and are exposed to an external heat source.

▶ Do not damage the pipelines of the coolant circuit and the compressor.

▶ Transport the appliance away without damaging it.

▶ Dispose of batteries, lamps, and the appliance according to the above specifications.



home.liebherr.com/fridge-manuals

EN Combined fridge-freezer

Issue date: 20220606

Part number index: 7080434-00

Liebherr-Hausgeräte Marica EOOD
Bezirk Plovdiv
4202 Radinovo
Bulgarien