Solid State Drive

Quick Start Guide



ZHEJIANG DAHUA VISION TECHNOLOGY CO., LTD. V1.0.0

Foreword

General

This manual introduces the structure and installation of the Solid State Drive (hereinafter referred to as "the SSD").

Models

C800A,and E800 series.

Safety Instructions

The following categorized signal words with defined meaning might appear in the manual.

Signal Words	Meaning
DANGER	Indicates a high potential hazard which, if not avoided, will result in death or serious injury.
WARNING	Indicates a medium or low potential hazard which, if not avoided, could result in slight or moderate injury.
CAUTION	Indicates a potential risk which, if not avoided, could result in property damage, data loss, lower performance, or unpredictable result.
TIPS	Provides methods to help you solve a problem or save you time.
NOTE	Provides additional information as the emphasis and supplement to the text.

About the Manual

- The manual is for reference only. If there is inconsistency between the manual and the actual product, the actual product shall prevail.
- We are not liable for any loss caused by the operations that do not comply with the manual.
- The manual would be updated according to the latest laws and regulations of related jurisdictions. For detailed information, refer to the paper manual, CD-ROM, QR code or our official website. If there is inconsistency between paper manual and the electronic version, the electronic version shall prevail.
- All the designs and software are subject to change without prior written notice. The product updates might cause some differences between the actual product and the manual. Please contact the customer service for the latest program and supplementary documentation.
- There still might be deviation in technical data, functions and operations description, or errors in print. If there is any doubt or dispute, we reserve the right of final explanation.
- Upgrade the reader software or try other mainstream reader software if the manual (in PDF format) cannot be opened.
- All trademarks, registered trademarks and the company names in the manual are the properties of their respective owners.
- Please visit our website, contact the supplier or customer service if there is any problem occurring when using the device.
- If there is any uncertainty or controversy, we reserve the right of final explanation.

Important Safeguards and Warnings

This section introduces the proper way of using the SSD, and danger and property damage preventions. Before using the SSD, read this manual carefully. Follow the instructions and keep this manual properly.

Operating Requirements

- Do not place or install the product in a place exposed to sunlight or near the heat source.
- Keep the product installed horizontally or on a stable place to prevent it from falling.
- Do not drop or splash liquid onto the product, and make sure that there is no object filled with liquid on the product to prevent liquid from flowing into the product.
- Install the product in a well-ventilated place, and do not block the ventilation of the product.
- Operate the product within the rated range of power input and output.
- Do not dissemble the product.
- Transport, use and store the product under the allowed humidity and temperature conditions.

Table of Contents

Foreword I
Important Safeguards and Warnings II
1 Structure 1
1.1 Dimensions 1
1.2 Ports 1
2 Installation 2
2.1 Preparation 2
2.2 Installing SSD 2
Appendix 1 Cybersecurity Recommendations 3

1 Structure

1.1 Dimensions

Figure 1-1 Dimensions (mm [inch])

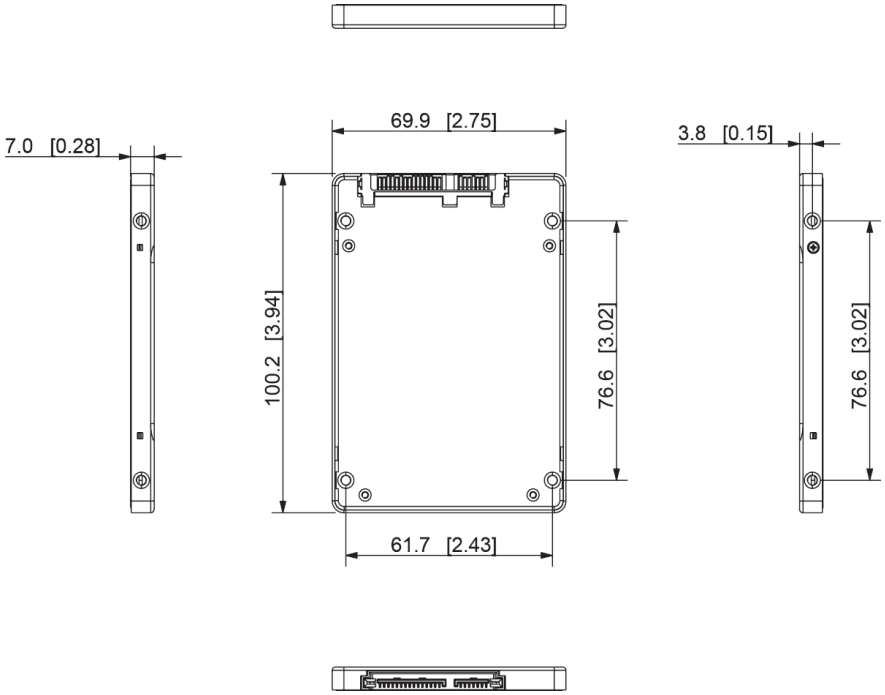

1.2 Ports

Figure 1-2 Ports

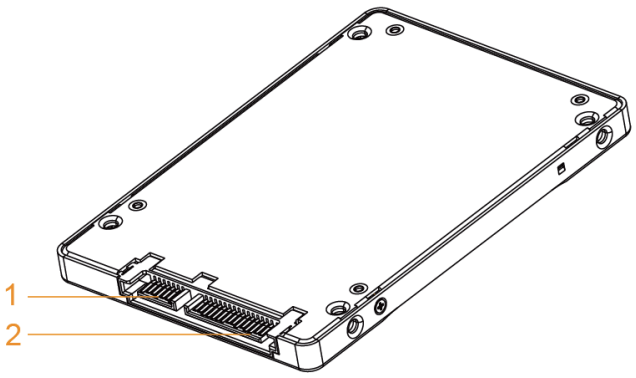

Table - Port description

No.	Name	Description
1	Data port	Connect the SSD to the SATA data port on devices such as PC with SATA data cable.
2	Power port	Connect the SSD to SATA power port on devices such as PC with SATA power cable.

2 Installation

2.1 Preparation

Table 2-1 Environment requirements

Installation Environment	Description
Operating temperature	0°C to 70°C (32°F to 158°F)
Storage temperature	-40°C to 85°C (-40°F to 185°F)
Operating Humidity	5%–95% (non-condensing)

2.2 Installing SSD

Before installing, make sure that your PC mainboard supports SSD, and there are enough SATA slots to be used by the SSD.

There are two installation methods for the SSD: Cable connection and direction insertion.

- Cable connection: Connect corresponding ports on the main board of devices to the SSD with SATA data cable and power cable.

  SATA data cable and power cable of the SSD are not included. You can purchase them separately as needed.
- Direct insertion: Insert data and power ports of the SSD directly to the corresponding ports on the main board of devices.

Figure 2-1 Install by cable connection

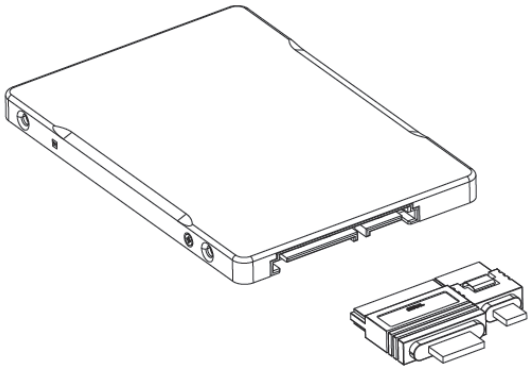

Figure 2-2 Install by direct insertion

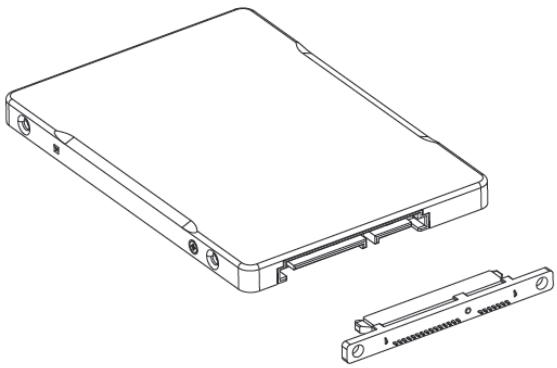

ENABLING A SAFER SOCIETY AND SMARTER LIVING

ZHEJIANG DAHUA VISION TECHNOLOGY CO., LTD.
Address: No.1199 Bin'an Road, Binjiang District, Hangzhou, P. R. China | Website: www.dahuasecurity.com | Postcode: 310053
Email: overseas@dahuatech.com | Fax: +86-571-87688815 | Tel: +86-571-87688883