HR 724 B H

12NC: F104321

GTIN (EAN) code: 5054645043217

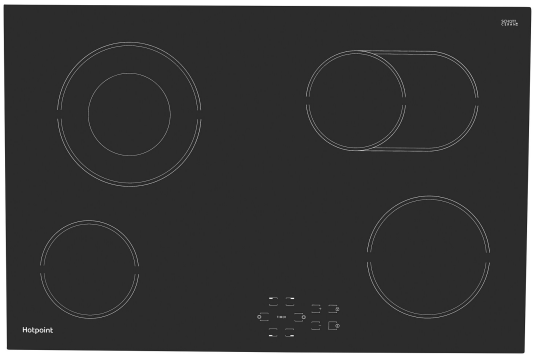

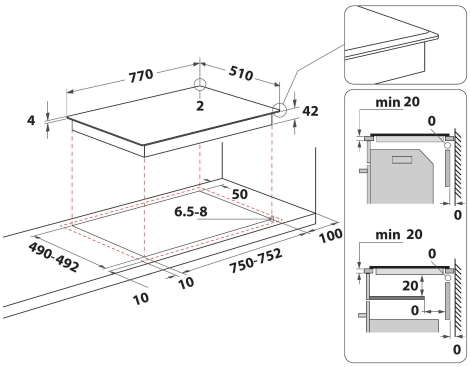

MAIN FEATURES

Product group	Hob
Construction type	Built-in
Type of control	Electronic
Type of control settings	-
Number of gas burners	0
Number of electric cooking zones	4
Number of electric plates	0
Number of radiant plates	4
Number of halogen plates	0
Number of induction plates	4
Number of electric warming zones	0
Location of control panel	Front
Basic surface material	Ceramic Glass
Main colour of product	Black
Electrical connection rating (W)	5500
Gas connection rating (W)	0
Gas type	N/A
Current (A)	24
Voltage (V)	220-240/380-415
Frequency (Hz)	50/60
Length of electrical supply cord (cm)	0
Plug type	No
Gas connection	N/A
Width of the product	770
Height of the product	46
Depth of the product	510
Minimum niche height	42
Minimum niche width	750
Niche depth	490
Net weight (kg)	12
Automatic programmes	No

TECHNICAL FEATURES

Power on indicator	No
Number of indicators	0
Type of regulation	Radiant
Type of lid	Without
Residual heat indicator	Central
Main on/off switch	Yes
Safety device	-
Timer	Yes

PERFORMANCES

Energy input	Electric