KME761080M

EN **User Manual**
Microwave combi-oven

USER MANUAL

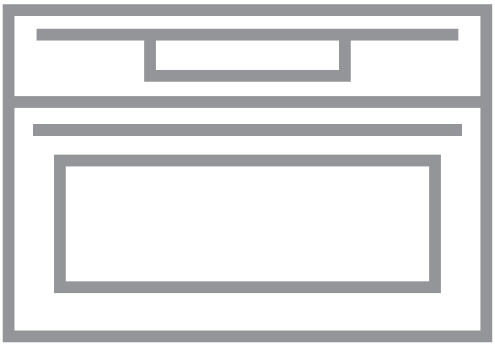

AEG

FOR PERFECT RESULTS

Thank you for choosing this AEG product. We have created it to give you impeccable performance for many years, with innovative technologies that help make life simpler – features you might not find on ordinary appliances. Please spend a few minutes reading to get the very best from it.
Visit our website to:



Get usage advice, brochures, trouble shooter, service and repair information:
www.aeg.com/support



Register your product for better service:
www.registeraeg.com



Buy Accessories, Consumables and Original spare parts for your appliance:
www.aeg.com/shop

CUSTOMER CARE AND SERVICE

Always use original spare parts.
When contacting our Authorised Service Centre, ensure that you have the following data available: Model, PNC, Serial Number.
The information can be found on the rating plate.

⚠ Warning / Caution-Safety information

ⓘ General information and tips

Environmental information

CONTENTS

1. SAFETY INFORMATION..... 3

1.1 Children and vulnerable people safety..... 3
1.2 General Safety..... 4

2. SAFETY INSTRUCTIONS..... 6

2.1 Installation..... 6
2.2 Electrical connection..... 7
2.3 Use..... 8
2.4 Care and cleaning..... 8
2.5 Glassware use..... 9
2.6 Internal lighting..... 9
2.7 Service..... 9
2.8 Disposal..... 9

3. PRODUCT DESCRIPTION..... 10

3.1 General overview..... 10
3.2 Accessories..... 10

4. HOW TO TURN OVEN ON AND OFF..... 11

4.1 Control panel..... 11
4.2 Display..... 12

5. BEFORE FIRST USE..... 13

5.1 Initial Cleaning 13
5.2 First connection..... 13

6. DAILY USE..... 13

6.1 How to set: Heating functions..... 13
6.2 How to set: Microwave heating functions..... 14
6.3 How to use: Microwave quick start 15
6.4 How to set: Assisted Cooking..... 15
6.5 Heating functions..... 15

7. CLOCK FUNCTIONS..... 18

7.1 Clock functions description..... 18
7.2 How to set: Clock functions..... 19

8. HOW TO USE: ACCESSORIES..... 21

8.1 Inserting accessories..... 21

9. ADDITIONAL FUNCTIONS..... 22

9.1 How to save: Favourites..... 22
9.2 Function lock..... 22

9.3 Automatic switch-off.....23
9.4 Cooling fan.....23

10. HINTS AND TIPS.....23

10.1 Cooking recommendations.....23
10.2 Microwave recommendations 24
10.3 Microwave suitable cookware and materials 24
10.4 Recommended power settings for different kinds of food.....25
10.5 Cooking tables for test institutes..26

11. CARE AND CLEANING.....28

11.1 Notes on cleaning.....28
11.2 How to remove: Shelf supports ...28
11.3 How to replace: Lamp.....29

12. TROUBLESHOOTING.....29

12.1 What to do if.....29
12.2 How to manage: Error codes.....30
12.3 Service data.....31

13. ENERGY EFFICIENCY.....31

13.1 Energy saving.....31

14. MENU STRUCTURE.....32

14.1 Menu.....32
14.2 Submenu for: Options.....32
14.3 Submenu for: Setup.....33
14.4 Submenu for: Service.....33

15. IT'S EASY!.....33

16. TAKE A SHORTCUT!.....34

17. ENVIRONMENTAL CONCERNS.....35

Subject to change without notice.

1. ⚠ SAFETY INFORMATION

Before the installation and use of the appliance, carefully read the supplied instructions. The manufacturer is not responsible for any injuries or damage that are the result of incorrect installation or usage. Always keep the instructions in a safe and accessible location for future reference.

1.1 Children and vulnerable people safety

- This appliance can be used by children aged from 8 years and above and persons with reduced physical, sensory or mental capabilities or lack of experience and knowledge if they have been given supervision or instruction concerning the use of the appliance in a safe way and understand the hazards involved. Children of less than 8 years of age and persons with very extensive and complex disabilities shall be kept away from the appliance unless continuously supervised.
- Children should be supervised to ensure that they do not play with the appliance.

- Keep all packaging away from children and dispose of it appropriately.
- WARNING: The appliance and its accessible parts become hot during use. Keep children and pets away from the appliance when in use and when cooling down.
- If the appliance has a child safety device, it should be activated.
- Children shall not carry out cleaning and user maintenance of the appliance without supervision.

1.2 General Safety

- This appliance is for cooking purposes only.
- This appliance is designed for single household domestic use in an indoor environment.
- This appliance may be used in, offices, hotel guest rooms, bed & breakfast guest rooms, farm guest houses and other similar accommodation where such use does not exceed (average) domestic usage levels.
- Only a qualified person must install this appliance and replace the cable.
- Do not use the appliance before installing it in the built-in structure.
- Disconnect the appliance from the power supply before carrying out any maintenance.
- If the mains power supply cable is damaged, it must be replaced by the manufacturer, its Authorised Service Centre or similarly qualified persons to avoid an electrical hazard.
- WARNING: Ensure that the appliance is switched off before replacing the lamp to avoid the possibility of electric shock.
- WARNING: The appliance and its accessible parts become hot during use. Care should be taken to avoid touching heating elements.
- Always use oven gloves to remove or insert accessories or ovenware.

- Do not activate the microwave function when the appliance is empty. Metal parts inside the cavity can create electric arcing.
- Metallic containers for food and beverages are not allowed during microwave cooking. This requirement is not applicable if the manufacturer specifies size and shape of metallic containers suitable for microwave cooking.
- WARNING: If the door or door seals are damaged, the appliance must not be operated until it has been repaired by a qualified person.
- WARNING: Only a qualified person can carry out any service or repair operation that involves the removal of a cover which gives protection against exposure to microwave energy.
- WARNING: Do not heat liquids and other foods in sealed containers. They are liable to explode.
- Use only utensils that are suitable for use in microwave ovens.
- When heating food in plastic or paper containers, observe the appliance due to the possibility of ignition.
- The appliance is intended for heating food and beverages. Drying of food or clothing and heating of warming pads, slippers, sponges, damp cloth and similar may lead to risk of injury, ignition or fire.
- If smoke is emitted, switch off or unplug the appliance and keep the door closed in order to stifle any flames.
- Microwave heating of beverages can result in delayed eruptive boiling. Care must be taken when handling the container.
- The contents of feeding bottles and baby food jars shall be stirred or shaken and the temperature checked before consumption, in order to avoid burns.
- Eggs in their shell and whole hard-boiled eggs should not be heated in the appliance since they may explode, even after microwave heating has ended.

- To remove the shelf supports first pull the front of the shelf support and then the rear end away from the side walls. Install the shelf supports in the opposite sequence.
- The appliance should be cleaned regularly and any food deposits removed.
- Do not use a steam cleaner to clean the appliance.
- Do not use harsh abrasive cleaners or sharp metal scrapers to clean the glass door since they can scratch the surface, which may result in shattering of the glass.
- Failure to maintain the appliance in a clean condition could lead to deterioration of the surface that could adversely affect the life of the appliance and possibly result in a hazardous situation.

2. SAFETY INSTRUCTIONS

2.1 Installation

⚠ **WARNING!**
Only a qualified person must install this appliance.

- Remove all the packaging.
- Do not install or use a damaged appliance.
- Follow the installation instructions supplied with the appliance.
- Always take care when moving the appliance as it is heavy. Always use safety gloves and enclosed footwear.
- Do not pull the appliance by the handle.
- Install the appliance in a safe and suitable place that meets installation requirements.
- Keep the minimum distance from other appliances and units.
- Before mounting the appliance, check if the oven door opens without restraint.
- The appliance is equipped with an electric cooling system. It must be operated with the electric power supply.
- The built-in unit must meet the stability requirements of DIN 68930.

Cabinet minimum height (Cabinet under the work-top minimum height)	444 (460) mm
Cabinet width	560 mm
Cabinet depth	550 (550) mm
Height of the front of the appliance	455 mm

Height of the back of the appliance	440 mm
Width of the front of the appliance	595 mm
Width of the back of the appliance	559 mm
Depth of the appliance	567 mm
Built in depth of the appliance	546 mm
Depth with open door	882 mm
Ventilation opening minimum size. Opening placed on the bottom rear side	560x20 mm
Mains supply cable length. Cable is placed in the right corner of the back side	1500 mm
Mounting screws	3.5x25 mm

2.2 Electrical connection

⚠ **WARNING!**
Risk of fire and electric shock.

- All electrical connections should be made by a qualified electrician.
- The appliance must be earthed.
- Make sure that the parameters on the rating plate are compatible with the electrical ratings of the mains power supply.
- Always use a correctly installed shockproof socket.
- Do not use multi-plug adapters and extension cables.
- Make sure not to cause damage to the mains plug and to the mains cable. Should the mains cable need to be replaced, this must be carried out by our Authorised Service Centre.
- Do not let mains cables touch or come near the appliance door or the niche below the appliance, especially when it operates or the door is hot.
- The shock protection of live and insulated parts must be fastened in such a way that it cannot be removed without tools.
- Connect the mains plug to the mains socket only at the end of the installation. Make sure that there is access to the mains plug after the installation.
- If the mains socket is loose, do not connect the mains plug.
- Do not pull the mains cable to disconnect the appliance. Always pull the mains plug.
- Use only correct isolation devices: line protecting cut-outs, fuses (screw type fuses removed from the holder), earth leakage trips and contactors.
- The electrical installation must have an isolation device which lets you disconnect the appliance from the mains at all poles. The isolation device must have a contact opening width of minimum 3 mm.
- This appliance is supplied only with a main cable.

2.3 Use

⚠ **WARNING!**
Risk of injury, burns and electric shock or explosion.

- Do not change the specification of this appliance.
- Make sure that the ventilation openings are not blocked.
- Do not let the appliance stay unattended during operation.
- Deactivate the appliance after each use.
- Be careful when you open the appliance door while the appliance is in operation. Hot air can release.
- Do not operate the appliance with wet hands or when it has contact with water.
- Do not apply pressure on the open door.
- Do not use the appliance as a work surface or as a storage surface.
- Open the appliance door carefully. The use of ingredients with alcohol can cause a mixture of alcohol and air.
- Do not let sparks or open flames to come in contact with the appliance when you open the door.
- Do not put flammable products or items that are wet with flammable products in, near or on the appliance.
- Do not use microwave function to preheat the oven.

⚠ **WARNING!**
Risk of damage to the appliance.

- To prevent damage or discoloration to the enamel:
  – do not put aluminium foil directly on the bottom of cavity of the appliance.
  – do not put water directly into the hot appliance.
  – do not keep moist dishes and food in the appliance after you finish the cooking.
  – be careful when you remove or install the accessories.
- Discoloration of the enamel or stainless steel has no effect on the performance of the appliance.
- Use a deep pan for moist cakes. Fruit juices cause stains that can be permanent.
- Always cook with the appliance door closed.
- If the appliance is installed behind a furniture panel (e.g. a door) make sure the door is never closed when the appliance operates. Heat and moisture can build up behind a closed furniture panel and cause subsequent damage to the appliance, the housing unit or the floor. Do not close the furniture panel until the appliance has cooled down completely after use.

2.4 Care and cleaning

⚠ **WARNING!**
Risk of injury, fire, or damage to the appliance.

- Before maintenance, deactivate the appliance and disconnect the mains plug from the mains socket.
- Make sure the appliance is cold. There is the risk that the glass panels can break.
- Replace immediately the door glass panels when they are damaged. Contact the Authorised Service Centre.
- Be careful when you remove the door from the appliance. The door is heavy!

- Make sure the cavity and the door are wiped dry after each use. Steam produced during the operation of the appliance condensates on cavity walls and can cause corrosion.
- Clean regularly the appliance to prevent the deterioration of the surface material.
- Fat and food remaining in the appliance can cause fire and electric arcing when the microwave function operates.
- Clean the appliance with a moist soft cloth. Use only neutral detergents. Do not use abrasive products, abrasive cleaning pads, solvents or metal objects.
- If you use an oven spray, follow the safety instructions on its packaging.

2.5 Glassware use

Handling your glassware without an appropriate degree of care could result in breakage, chipping, cracking or severe scratching:

- Do not spill cold water or other liquids on the glassware because a sudden temperature drop may cause immediate breakage of the glass. Broken glass pieces may be extremely sharp and difficult to locate.
- Do not place hot glassware on a wet or cool surface, directly on countertop or metal surface, or in sink; or handle hot glassware with wet cloth.
- Do not use or repair any glassware that is chipped, cracked or severely scratched.
- Do not drop or hit glassware against a hard object or strike utensils against it.
- Do not heat empty or nearly empty glassware in microwave, or overheat oil or butter in microwave (use minimum amount of cooking time).

Allow hot glassware to cool on a cooling rack, a potholder or a dry cloth. Make sure that the glassware is cool enough before washing, refrigerating or freezing.
Avoid handling hot glassware (including ware with silicone gripping surfaces) without dry potholders.
Avoid microwave misuse (i.e. running the oven without any load or small load).

2.6 Internal lighting

⚠ **WARNING!**
Risk of electric shock.

- Concerning the lamp(s) inside this product and spare part lamps sold separately: These lamps are intended to withstand extreme physical conditions in household appliances, such as temperature, vibration, humidity, or are intended to signal information about the operational status of the appliance. They are not intended to be used in other applications and are not suitable for household room illumination.
- This product contains a light source of energy efficiency class G.
- Use only lamps with the same specifications.

2.7 Service

- To repair the appliance contact the Authorised Service Centre.
- Use original spare parts only.

2.8 Disposal

⚠ **WARNING!**
Risk of injury or suffocation.

- Contact your municipal authority for information on how to dispose of the appliance.
- Disconnect the appliance from the mains supply.

- Cut off the mains electrical cable close to the appliance and dispose of it.
- Remove the door catch to prevent children or pets from becoming trapped in the appliance.

3. PRODUCT DESCRIPTION

3.1 General overview

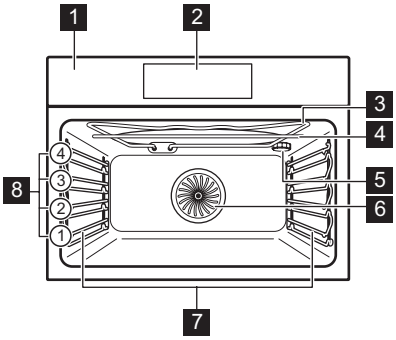

1	Control panel
2	Display
3	Heating element
4	Microwave generator
5	Lamp
6	Fan
7	Shelf support, removable
8	Shelf positions

3.2 Accessories

Wire shelf
For cookware, cake tins, roasts.

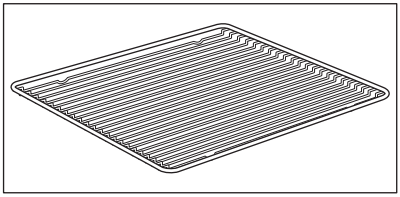

Grill- / Roasting pan
To bake and roast or as a pan to collect fat.

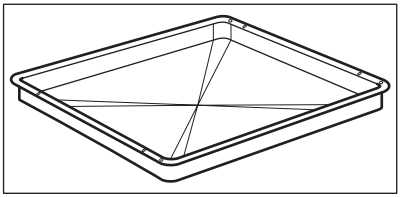

Microwave bottom glass plate
To prepare food in microwave mode.

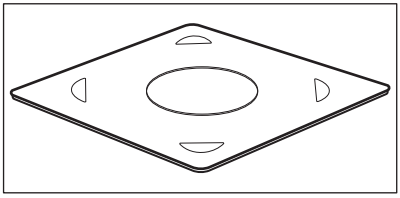

4. HOW TO TURN OVEN ON AND OFF

4.1 Control panel

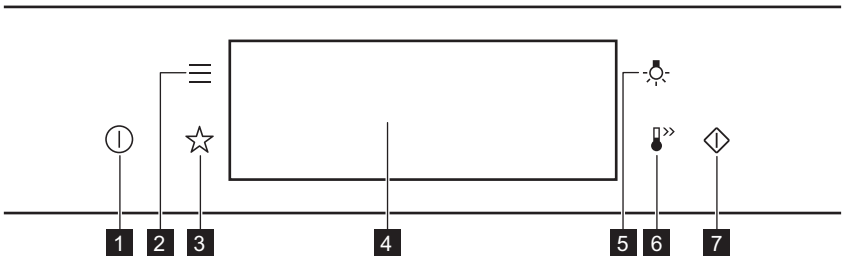

1	ON / OFF	Press and hold to turn the oven on and off.
2	Menu	Lists the oven functions.
3	Favourites	Lists the favourite settings.
4	Display	Shows the current settings of the oven.
5	Lamp switch	To turn the lamp on and off.
6	Fast Heat Up	To turn on and off the function: Fast Heat Up.
7	Microwave quick start	To turn on microwave function (1000 W and 30 seconds).

 **Press**	 **Move**	 **Press and hold**
Touch the surface with fingertip.	Slide fingertip over the surface.	Touch the surface for 3 seconds.

4.2 Display

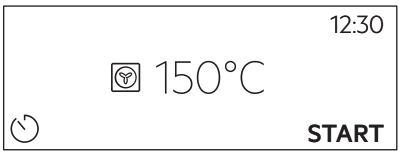	After turning on, the display shows the main screen with the heating function and the default temperature.
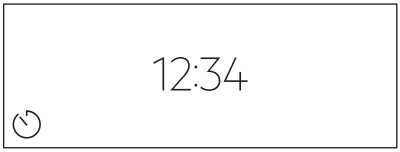	If you do not use the oven for 2 minutes, the display goes to standby.
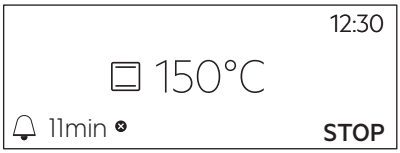	When you cook, the display shows the set functions and other available options.
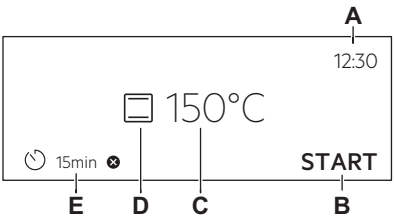	Display with key functions set. A. Time of day B. START/STOP C. Temperature / Microwave timer D. Heating functions E. Timer

Display indicators			
Basic indicators - to navigate on the display.			
OK To confirm the selection / setting.	To go one level back in the menu.	To undo the last action.	To turn the options on and off.
Sound alarm function indicators - when the set time of cooking ends, the signal sounds.			
The function is on.	STOP The function is on. Cooking stops automatically.	Sound alarm is off.	

Timer indicators	
To set the function: Delayed start.	To cancel the setting.

5. BEFORE FIRST USE

⚠ **WARNING!**
Refer to Safety chapters.

5.1 Initial Cleaning

		
Step 1	**Step 2**	**Step 3**
Remove all accessories and removable shelf supports from the oven.	Clean the oven and the accessories with a soft cloth, warm water and a mild detergent.	Place the accessories and the removable shelf supports in the oven.

5.2 First connection

The display shows welcome message after the first connection.
You have to set: Language, Display brightness, Key tones, Buzzer volume, Time of day.

6. DAILY USE

⚠ **WARNING!**
Refer to Safety chapters.

6.1 How to set: Heating functions

Step 1	Turn on the oven. The display shows the default heating function.
Step 2	Press the symbol of the heating function to enter the submenu.
Step 3	Select the heating function and press: OK. The display shows: temperature.
Step 4	Set: temperature. Press: OK.

Step 5	Press: START .
STOP - press to turn off the heating function.	
Step 6	Turn off the oven.

Take a shortcut!

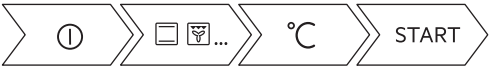

6.2 How to set: Microwave heating functions

Step 1	Remove all accessories and turn on the oven. Insert microwave bottom glass plate.
Step 2	Press the symbol of the heating function to enter the submenu.
Step 3	Select the microwave heating function and press: OK. The display shows: microwave power.
Step 4	Set: microwave power. Press: OK.
Step 5	Press: START .
STOP - press to turn off the function.	
Step 6	Turn off the oven.

The maximum time of microwave functions depends on microwave power you set:

MICROWAVE POWER	MAXIMUM TIME
100 - 600 W	59 minutes
More than 600 W	7 minutes

If you open the door, the function stops. To start it again, press START .

Take a shortcut!

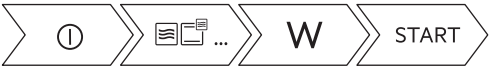

6.3 How to use: Microwave quick start

Step 1	Press and hold: ⏻. The microwave runs for 30 s.	
Step 2	To extend the cooking time:	
	Press on the running time value to go to the time settings. Set the cooking time.	Press **+30 s**.
The microwave can be switched on at any time with: Microwave quick start.		

6.4 How to set: Assisted Cooking

Every dish in this submenu has a recommended function and temperature. You can adjust the time and the temperature.
For some of the dishes you can also cook with:
- Weight Automatic

Step 1	Turn on the oven.
Step 2	Press: ☰.
Step 3	Press: ✕. Enter: Assisted Cooking.
Step 4	Choose a dish or a food type.
Step 5	Press: START .

Take a shortcut!



6.5 Heating functions

STANDARD

Heating function	Application
 **Grill**	To grill thin pieces of food and to toast bread.
 **Turbo Grilling**	To roast large meat joints or poultry with bones on one shelf position. To make gratins and to brown.
 **True Fan Cooking**	To bake on up to two shelf positions at the same time and to dry food. Set the temperature 20 - 40 °C lower than for Conventional Cooking.
 **Frozen Foods**	To make convenience food (e.g., french fries, potato wedges or spring rolls) crispy.
 **Conventional Cooking**	To bake and roast food on one shelf position.
 **Pizza Function**	To bake pizza. To make intensive browning and a crispy bottom.
 **Bottom Heat**	To bake cakes with crispy bottom and to preserve food.

SPECIALS

Heating function	Application
 **Preserving**	To preserve vegetables (e.g., pickles).

Heating function	Application
 **Dehydrating**	To dry sliced fruit, vegetables and mushrooms.
 **Plate Warming**	To preheat plates for serving.
 **Dough Proving**	To speed up the rising of the yeast dough. It prevents dough surface from drying and keeps the dough elastic.
 **Au Gratin**	For dishes such as lasagna or potato gratin. To make gratins and to brown.
 **Slow Cooking**	To prepare tender, succulent roasts.
 **Keep Warm**	To keep food warm.
 **Bread Baking**	Use this function to prepare bread and bread rolls with a very good professional-like result in terms of crispiness, colour and crust gloss.

MICROWAVE

Heating function	Application
 **Microwave**	Heating up, cooking, power range: 100 - 1000 W
 **Defrost**	Defrosting meat, fish, cakes, power range: 100 - 200 W

Heating function	Application
 **Reheat**	Heating up pre-prepared meals and delicate food, power range: 300 - 700 W
 **Liquid**	Heating up drinks and soups, power range: 800 - 1000 W

MICROWAVE COMBINATION

Heating function	Application
 **True Fan Cooking + MW**	Baking on one shelf position. The function with MW boost.
 **Conventional Cooking + MW**	Baking and roasting food on one shelf position. The function with MW boost.
 **Grill + MW**	To cook food in a short time and to brown it. The function with MW boost.
 **Turbo Grilling + MW**	To roast large pieces of meat on one level. To make gratins and to brown. The function with MW boost.

7. CLOCK FUNCTIONS

7.1 Clock functions description

Clock function	Application
Cooking time	To set the length of cooking. Maximum is 23 h 59 min. Maximum for combined functions (microwave + standard) is 119 min 59 sec.

Clock function	Application
End action	To set what happens when the timer ends counting.
Delayed start	To postpone the start and / or end of cooking.
Time extension	To extend cooking time.
Reminder	To set a countdown. Maximum is 23 h 59 min. This function has no effect on the operation of the oven.
Uptimer	Monitors how long the function operates. Uptimer - you can turn it on and off.

End action and Delayed start are not available for microwave functions.

7.2 How to set: Clock functions

How to set the clock	
Step 1	Press: Time of day.
Step 2	Set the time. Press: OK.

How to set cooking time	
Step 1	Choose the heating function and set the temperature.
Step 2	Press: ⏲.
Step 3	Set the time. Press: OK.

Take a shortcut!



How to choose end option	
Step 1	Choose the heating function and set the temperature.

How to choose end option	
Step 2	Press: ⏲.
Step 3	Set the cooking time.
Step 4	Press: ● ● ●.
Step 5	Press: End action.
Step 6	Choose the preferred: End action.
Step 7	Press: OK. Repeat the action until the display shows the main screen.

How to delay start of cooking	
Step 1	Set the heating function and the temperature.
Step 2	Press: ⏲.
Step 3	Set the cooking time.
Step 4	Press: ● ● ●.
Step 5	Press: Delayed start.
Step 6	Choose the value.
Step 7	Press: OK. Repeat the action until the display shows the main screen.

How to extend cooking time
When 10% of cooking time is left and the food seems not to be ready, you can extend cooking time. You can also change the heating function.
Press **+1min** to extend the cooking time.

How to change timer settings	
Step 1	Press: ⏲.

How to change timer settings	
Step 2	Set the timer value.
Step 3	Press: OK.
You can change the set time during cooking at any time.	

8. HOW TO USE: ACCESSORIES

8.1 Inserting accessories

Use only suitable cookware and material. Refer to "Hints and tips" chapter, Microwave suitable cookware and materials.
A small indentation at the top increases safety. The indentations are also anti-tip devices. The high rim around the shelf prevents cookware from slipping of the shelf.

Wire shelf: Push the shelf between the guide bars of the shelf support and make sure that the feet point down.	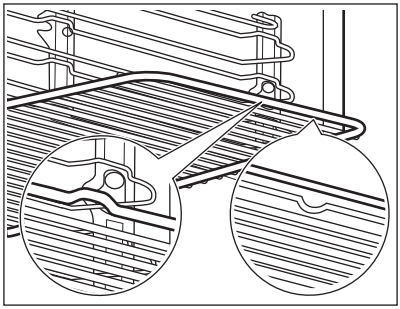
Deep pan: Push the tray between the guide bars of the shelf support.	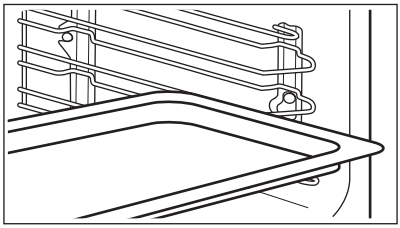

Wire shelf, Deep pan: Push the tray between the guide bars of the shelf support and the wire shelf on the guide bars above.	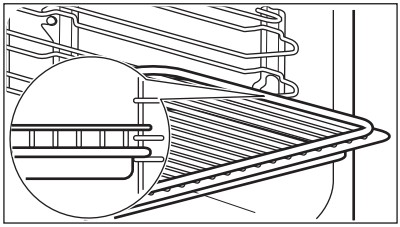
Microwave bottom glass plate: Use the microwave bottom glass plate only with microwave function. It is not suitable for combined microwave function (e.g. microwave grilling). Put the accessory on the bottom of the cavity. You can put the food directly on the microwave bottom glass plate.	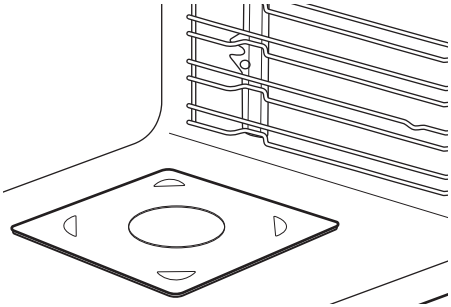

9. ADDITIONAL FUNCTIONS

9.1 How to save: Favourites

You can save your favourite settings, such as the heating function, the cooking time, the temperature or the cleaning function. You can save 3 favourite settings.

Step 1	Turn on the oven.
Step 2	Select the preferred setting.
Step 3	Press: ☰. Select: Favourites.
Step 4	Select: Save current settings.
Step 5	Press **+** to add the setting to the list of: Favourites. Press OK.

↺ - press to reset the setting.
⊗ - press to cancel the setting.

9.2 Function lock

This function prevents an accidental change of the heating function.

Step 1	Turn on the oven.
Step 2	Set a heating function.
Step 3	☆, - press at the same time to turn on the function.
To turn off the function repeat step 3.	

9.3 Automatic switch-off

For safety reasons the oven turns off after some time, if a heating function works and you do not change any settings.

(°C)	(h)
30 - 115	12.5
120 - 195	8.5
200 - 230	5.5

The Automatic switch-off does not work with the functions: Light, End time, Slow Cooking.

9.4 Cooling fan

When the oven operates, the cooling fan turns on automatically to keep the surfaces of the oven cool. If you turn off the oven, the cooling fan can continue to operate until the oven cools down.

10. HINTS AND TIPS

10.1 Cooking recommendations

ⓘ

The temperature and cooking times in the tables are guidelines only. They depend on the recipes and the quality and quantity of the ingredients used.
Your oven may bake or roast differently to the oven you had before. The hints below show recommended settings for temperature, cooking time and shelf position for specific types of the food.
If you cannot find the settings for a special recipe, look for the similar one.
For more cooking recommendations refer to cooking tables on our website. To find the Cooking Hints check the PNC number on the rating plate on the front frame of the oven cavity.

10.2 Microwave recommendations

Let's cook!
Place the food on the microwave bottom glass plate on the bottom of the cavity.
Place the food on a plate on the bottom of the cavity.
Turn or stir the food halfway through the defrosting and cooking time.
Stir liquid dishes from time to time.
Stir the food before serving.
Cover the food for cooking and reheating.
Put the spoon to the bottle or glass when heating drinks to ensure better heat distribution.
Put the food into the oven without packaging. The packaged ready meals can be put into the oven only when the packaging is microwave safe (check information on the packaging).



Microwave cooking
Cook food covered. If you want to keep a crust cook food without a cover.
Do not overcook the dishes by setting the power and time too high. The food can dry out, burn or cause fire.
Do not use the oven to cook eggs or snails in their shells, because they can burst. Pierce the yolk of fried egg before reheating it.
Pierce food with skin or peel several times before cooking.
Cut vegetables into similar-sized pieces.
After you turn off the oven, take the food out and let it stand for a few minutes to allow the heat distribute evenly.



Microwave defrosting
Put the frozen, unwrapped food on a small upturned plate with a container below it, or on a defrosting rack or plastic sieve so that the defrosting liquid can leak out.
Remove defrosted pieces subsequently.
To cook fruit and vegetables without defrosting them first, you can use a higher microwave power.

10.3 Microwave suitable cookware and materials

For the microwave use only suitable cookware and materials. Use below table as a reference. Check the cookware / material specification before use.

Cookware / Material			
Ovenproof glass and porcelain with no metal components, e.g. heat-proof glass	✓	✓	✓
Non-ovenproof glass and porcelain without any silver, gold, platinum or other metal decorations	✓	x	x
Glass and glass ceramic made of ovenproof / frost-proof material	✓	✓	✓

Cookware / Material			
Ovenproof ceramic and earthenware without any quartz or metal components and glazes which contain metal	✓	✓	✓
Ceramic, porcelain and earthenware with unglazed bottom or with small holes, e.g. on handles	x	x	x
Heat-resistant plastic up to 200 °C	✓	✓	x
Cardboard, paper	✓	x	x
Clingfilm	✓	x	x
Microwave clingfilm	✓	✓	x
Roasting dishes made of metal, e.g. enamel, cast iron	x	x	x
Baking tins, black lacquer or silicon-coated	x	x	x
Wire shelf	x	x	✓
Microwave glass bottom plate	✓	✓	x
Cookware for microwave use, e.g. crisp pan	x	✓	x

10.4 Recommended power settings for different kinds of food

The data in the table is for guidance only.

700 - 1000 W		
 Cooking vegetables	 Searing at the start of the cooking process	 Heating liquids

500 - 600 W			
 Cooking egg dishes	 Simmering stews	 Heating one-plate meals	 Defrosting and heating frozen meals

300 - 400 W				
 Melting cheese, chocolate, butter	 Simmering rice	 Heating baby food	 Cooking / Heating delicate food	 Continuing cooking

100 - 200 W			
 Defrosting bread	 Defrosting fruit and cakes	 Defrosting cheese, cream, butter	 Defrosting meat, fish

10.5 Cooking tables for test institutes

Information for test institutes

Tests according to IEC 60705.

Use wire shelf unless otherwise specified.					
MICROWAVE FUNCTION	POWER (W)	(kg)		(min)	
Sponge cake	600	0.475	Bottom	7 - 9	Turn container around by 1/4, halfway through the cooking time.
Meatloaf	400	0.9	2	25 - 32	Turn container around by 1/4, halfway through the cooking time.
Egg custard	500	1	Bottom	18	-
Meat defrosting	200	0.5	Bottom	7 - 8	Turn the meat upside down halfway through the cooking time.

Use the wire shelf.						
MICROWAVE COMBI FUNCTION		POWER (W)	(°C)		(min)	
Cake, 0.7 kg	Conventional Cooking + MW	100	200	2	23 - 27	Turn container around by 1/4, halfway through the cooking time.
Potato gratin, 1.1 kg	True Fan Cooking + MW	300	180	2	38 - 42	Turn container around by 1/4, halfway through the cooking time.
Chicken, 1.1 kg	Turbo Grilling + MW	400	230	1	35 - 40	Put the meat in round glass container and turn it upside down halfway through the cooking time.

11. CARE AND CLEANING

⚠ **WARNING!**
Refer to Safety chapters.

11.1 Notes on cleaning

 **Cleaning Agents**	Clean the front of the oven with a soft cloth with warm water and a mild detergent.
	Use a cleaning solution to clean metal surfaces.
	Clean stains with a mild detergent.

 **Everyday Use**	Clean the cavity after each use. Fat accumulation or other residue may cause fire. Clean the oven ceiling carefully from residue and fat.
	Do not store the food in the oven for longer than 20 minutes. Dry the cavity with a soft cloth after each use.

 **Accessories**	Clean all accessories after each use and let them dry. Use a soft cloth with warm water and a mild detergent. Do not clean the accessories in a dishwasher.
	Do not clean the non-stick accessories using abrasive cleaner or sharp-edged objects.

11.2 How to remove: Shelf supports

Remove the shelf supports to clean the oven.

Step 1	Turn off the oven and wait until it is cold.	
Step 2	Carefully pull the shelf supports up and out of the front catch.	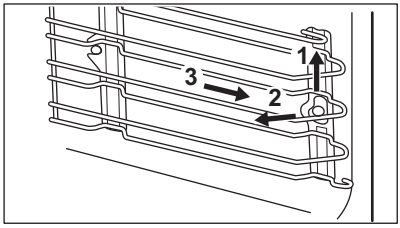
Step 3	Pull the front end of the shelf support away from the side wall.	
Step 4	Pull the supports out of the rear catch.	

Install the shelf supports in the opposite sequence.

11.3 How to replace: Lamp

⚠	**WARNING!** Risk of electric shock. The lamp can be hot.

Always hold the halogen lamp with a cloth to prevent grease residue from burning on the lamp.

Before you replace the lamp:		
Step 1	**Step 2**	**Step 3**
Turn off the oven. Wait until the oven is cold.	Disconnect the oven from the mains.	Put a cloth on the bottom of the cavity.

Top lamp

Step 1	Turn the glass cover to remove it.
Step 2	Clean the glass cover.
Step 3	Replace the lamp with a suitable 300 °C heat-resistant lamp.
Step 4	Install the glass cover.

12. TROUBLESHOOTING

⚠	**WARNING!** Refer to Safety chapters.

12.1 What to do if...

The oven does not turn on or does not heat up	
Possible cause	**Remedy**
The oven is not connected to an electrical supply or it is connected incorrectly.	Check if the oven is correctly connected to the electrical supply.

The oven does not turn on or does not heat up	
Possible cause	**Remedy**
The clock is not set.	Set the clock, for details refer to "Clock Functions" chapter, How to set: Clock functions.
The door is not closed correctly.	Fully close the door.
The fuse is blown.	Make sure the fuse is the cause of the problem. If the problem recurs, contact a qualified electrician.
The oven Child Lock is on.	Refer to "Menu" chapter, Submenu for: Options.

Components	
Description	**Remedy**
The lamp is burnt out.	Replace the lamp, for details refer to "Care and Cleaning" chapter, How to replace: Lamp.

12.2 How to manage: Error codes

When the software error occurs, the display shows error message.
In this section, you will find the list of the problems that you can handle on your own.

Code and description	Remedy
F240, F439 - the touch fields on the display do not work properly.	Clean the surface of the display. Make sure there is no dirt on the touch fields.
F908 - the oven system cannot connect with the control panel.	Turn the oven off and on.

When one of these error messages continues to appear on the display, it means a faulty subsystem may have been disabled. In such a case contact your dealer or an Authorized Service Centre. If one of these errors occurs, the rest of the oven functions will continue to work as usually.

Code and description	Remedy
F131 - the temperature of magnetron sensor is too high.	Turn the oven off and wait until it cools down. Turn the oven on again.

12.3 Service data

If you cannot find a solution to the problem yourself, contact your dealer or an Authorised Service Centre.
The necessary data for the service centre is on the rating plate. The rating plate is on the front frame of the oven cavity. Do not remove the rating plate from the oven cavity.

We recommend that you write the data here:	
Model (MOD.)	.....
Product number (PNC)	.....
Serial number (S.N.)	.....

13. ENERGY EFFICIENCY

13.1 Energy saving

The oven has features which help you save energy during everyday cooking.

Make sure that the oven door is closed when the oven operates. Do not open the oven door too often during cooking. Keep the door gasket clean and make sure it is well fixed in its position.
Use metal cookware to improve energy saving (only when you use a non-microwave function).
When possible, do not preheat the oven before cooking.
Keep breaks between baking as short as possible when you prepare a few dishes at one time.
Cooking with fan
When possible, use the cooking functions with fan to save energy.
Residual heat
If a programme with the Duration or End Time selection is activated and the cooking time is longer than 30 min, the heating elements automatically turn off earlier in some oven functions. The fan and lamp continue to operate. When you turn off the oven, the display shows the residual heat. You can use that heat to keep the food warm.
When the cooking duration is longer than 30 min, reduce the oven temperature to minimum 3 - 10 min before the end of cooking. The residual heat inside the oven will continue to cook.
Use the residual heat to warm up other dishes.
Keep food warm
Choose the lowest possible temperature setting to use residual heat and keep a meal warm. The residual heat indicator or temperature appears on the display.
Cooking with the lamp off
Turn off the lamp during cooking. Turn it on only when you need it.

14. MENU STRUCTURE

14.1 Menu

Press ☰ to open Menu.

Menu item		Application
Assisted Cooking		Lists automatic programmes.
Favourites		Lists the favourite settings.
Options		To set the oven configuration.
Settings	Setup	To set the oven configuration.
	Service	Shows the software version and configuration.

14.2 Submenu for: Options

Submenu	Application
Light	Turns the lamp on and off.
Child Lock	Prevents accidental activation of the oven. When the option is on, the text "Child Lock" appears on the display when you turn on the oven. To enable the oven use, choose the code letters in the alphabetical order. Access to the timer, the remote operation and the lamp is available with the Child Lock on.
Fast Heat Up	Shortens heat up time. It is available only for some of the oven functions.
Time indication	Turns the clock on and off.
Digital clock style	Changes the format of the displayed time indication.

14.3 Submenu for: Setup

Submenu	Description
Language	Sets the oven language.
Display brightness	Sets the display brightness.
Key tones	Turns the tone of the touch fields on and off. It is not possible to mute the tone for: ⏻.
Buzzer volume	Sets the volume of key tones and signals.
Time of day	Sets the current time and date.

14.4 Submenu for: Service

Submenu	Description
Demo mode	Activation / deactivation code: 2468
Software version	Information about software version.
Reset all settings	Restores factory settings.

15. IT'S EASY!

Before first use you have to set:				
Language	Display brightness	Key tones	Buzzer volume	Time of day

Familiarize yourself with the basic icons on the control panel and the display:				
⏻ ON / OFF	☰ Menu	☆ Favourites	⏲ Timer	START / STOP

Start using the oven				
Quick start	Turn on the oven and start cooking with the default temperature and time of the function.	**Step 1**	**Step 2**	**Step 3**
		Press and hold: ⏻.	☐ ... - select the preferred function.	Press: START .
Quick Off	Turn off the oven, any screen or message at any time.	⏻ - press and hold until the oven turns off.		
MW quick start	Start Microwave at any time with default settings: 30 sec / 1000W.	Press: ⏀.		

Start cooking				
Step 1	**Step 2**	**Step 3**	**Step 4**	**Step 5**
⏻ - press to turn on the oven.	☐ ... - select the heating function.	°C - set the temperature.	OK - press to confirm.	START - press to start cooking.

Get to know how to cook quickly				
Use the automatic programmes to prepare a dish quickly with the default settings:				
Assisted Cooking	**Step 1**	**Step 2**	**Step 3**	**Step 4**
	Press: ⏻.	Press: ☰.	Press: ✕ Assisted Cooking.	Choose the dish.

Use quick functions to set the cooking time	
10% Finish assist Use 10% Finish assist to add extra time when 10% of the cooking time is left.	To extend the cooking time press **+1min**.

16. TAKE A SHORTCUT!

Here you can see all the useful shortcuts. You can also find them in the dedicated chapters in the user manual.

How to set: Heating functions

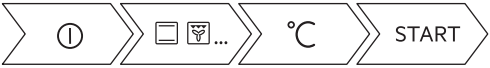

How to set: Assisted cooking



How to set: Cooking time



How to delay: Start and end of cooking



How to cancel: Set Timer



17. ENVIRONMENTAL CONCERNS

Recycle materials with the symbol ♺. Put the packaging in relevant containers to recycle it. Help protect the environment and human health by recycling waste of electrical and electronic appliances. Do not dispose of appliances marked with the symbol ⌛ with the household waste. Return the product to your local recycling facility or contact your municipal office.

www.aeg.com/shop



867371397-A-082022

UK CA

AEG