Electrolux

**electrolux.com/register**

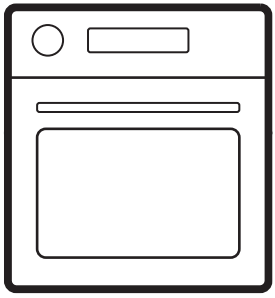

KOCDH76X

## INSTALLATION

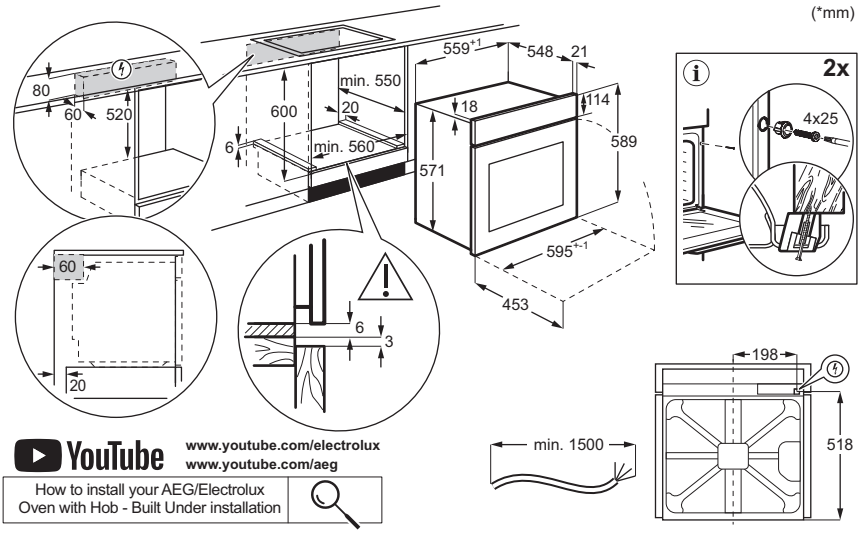


YouTube www.youtube.com/electrolux www.youtube.com/aeg

How to install your AEG/Electrolux Oven with Hob - Built Under installation

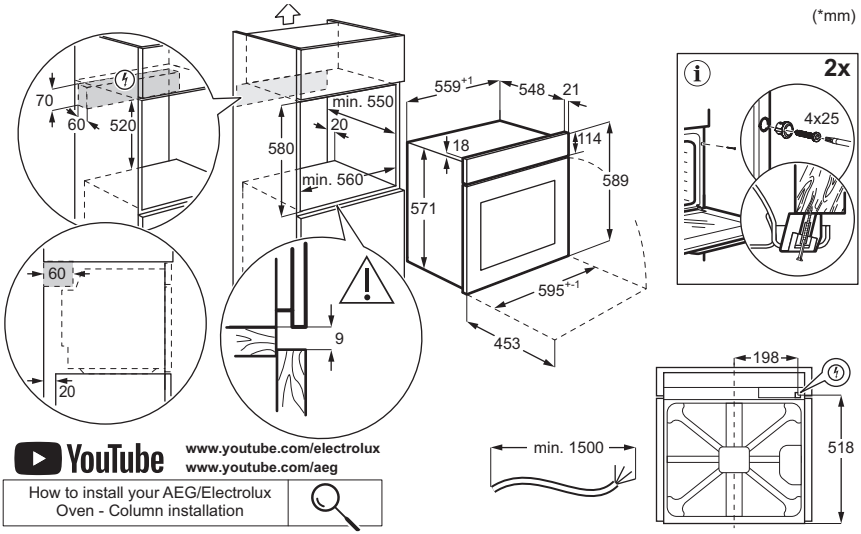


YouTube www.youtube.com/electrolux www.youtube.com/aeg

How to install your AEG/Electrolux Oven - Column installation

**1.** SAFETY INFORMATION..... **3**
**2.** SAFETY INSTRUCTIONS..... **4**
**3.** PRODUCT DESCRIPTION..... **7**
**4.** BEFORE FIRST USE..... **8**
**5.** DAILY USE..... **8**
**6.** HINTS AND TIPS..... **12**
**7.** CARE AND CLEANING..... **14**
**8.** TROUBLESHOOTING..... **15**
**9.** ENERGY EFFICIENCY..... **16**
**10.** ENVIRONMENTAL CONCERNS..... **17**

# 1. ⚠ SAFETY INFORMATION

Before the installation and use of the appliance read the supplied instructions carefully. The manufacturer is not responsible for any injuries or damage that result from incorrect installation or usage. Always keep the instructions in a safe and accessible location for future reference.

## 1.1 Children and vulnerable people safety

- This appliance can be used by children aged from 8 years and above and persons with reduced physical, sensory or mental capabilities or lack of experience and knowledge if they have been given supervision or instruction concerning the use of the appliance in a safe way and understand the hazards involved. Children of less than 8 years of age and persons with very extensive and complex disabilities shall be kept away from the appliance unless continuously supervised.
- Children should be supervised to ensure that they do not play with the appliance.
- Keep packaging away from children and dispose of it properly.
- WARNING: The appliance and its accessible parts become hot during use. Keep children and pets away during use and cooling.
- Activate the child safety device, if available.
- Children must not clean or maintain the appliance without supervision.

## 1.2 General Safety

- This appliance is for cooking purposes only.
- This appliance is designed for single household domestic use in an indoor environment.
- This appliance may be used in offices, hotel guest rooms, bed & breakfast guest rooms, farm guest

houses, and other similar accommodation where such use does not exceed average domestic usage levels.
- Do not use the appliance before installing it in the built-in structure.
- Disconnect the appliance from the power supply before carrying out any maintenance.
- If the supply cord is damaged, it must be replaced by the manufacturer, its authorised service centre or similarly qualified persons to avoid an electrical hazard.
- WARNING: Ensure that the appliance is switched off before replacing the lamp to avoid the possibility of electric shock.
- WARNING: The appliance and its accessible parts become hot during use. Care should be taken to avoid touching heating elements or the surface of the appliance cavity.
- Always use oven gloves to remove or insert accessories or ovenware.
- To remove the shelf supports first pull the front of the shelf support and then the rear end away from the side walls. Install the shelf supports in the opposite sequence.
- Do not use a steam cleaner to clean the appliance.
- Do not use harsh abrasive cleaners or sharp metal scrapers to clean the glass door since they can scratch the surface, which may result in shattering of the glass.

## 2. SAFETY INSTRUCTIONS

### 2.1 Installation

⚠ **WARNING!**
Only a qualified person must install this appliance.

- Remove all the packaging.
- Do not install or use a damaged appliance.
- Follow the installation instructions available on our website.
- Be careful when moving the appliance, as it is heavy. Use safety gloves and enclosed footwear.
- Do not pull the appliance by the handle.
- Install the appliance in a safe and suitable location that meets installation requirements.
- Keep the minimum distance from other appliances and units.
- Before mounting the appliance, ensure it is level and that the door opens without any restraint.

- The appliance is equipped with an electric cooling system. It must be operated with the electric power supply.

## 2.2 Electrical connection

**⚠ WARNING!**
Risk of fire and electric shock.

- All electrical connections should be made by a qualified electrician.
- Make sure the parameters on the rating plate are compatible with the electrical ratings of the mains power supply.
- The appliance must be earthed. Always use a correctly installed shockproof socket.
- Do not use multi-plug adapters and extension cables.
- Avoid damaging the mains plug and cable. If replacement is needed, it must be done by our Authorized Service Centre.
- Do not let mains cables touch or come near the appliance door or the niche below, especially when it operates or the door is hot.
- Shock protection of live and insulated parts must be fastened securely and should not be removable without tools.
- Connect the mains plug to the socket only at the end of installation. Ensure access to the mains plug after installation.
- If the mains socket is loose, do not connect the mains plug.
- Do not disconnect the appliance by pulling on the mains cable. Always pull on the mains plug.
- Use only correct isolation devices: line protecting cut-outs, fuses (screw type fuses removed from the holder), earth leakage trips and contactors.
- The electrical installation must have an isolation device that disconnects the appliance from the mains at all poles, with a contact opening width of at least 3 mm.
- This appliance is supplied with a main plug and a main cable.

| Cable types applicable for installation or replacement for Europe: |
|---|
| H07 RN-F, H05 RN-F, H05 RRF, H05 VV-F, H05 V2V2-F (T90), H05 BB-F |

For the section of the cable refer to the total power on the rating plate. You can also refer to the table:

| Total power (W) | Section of the cable ($mm^2$) |
|---|---|
| maximum 1,380 | 3x0.75 |
| maximum 2,300 | 3x1 |
| maximum 3,680 | 3x1.5 |

The earth cord (green / yellow cable) must be 2 cm longer than the brown phase and blue neutral cables.

## 2.3 Use

**⚠ WARNING!**
Risk of injury, burns and electric shock or explosion.

- Do not change the specification of the appliance.
- Ensure ventilation openings are not blocked.
- Do not let the appliance stay unattended during operation.
- Deactivate the appliance after each use.
- Be careful when opening the appliance door during operation, as hot air and flammable mixtures from alcohol ingredients can be released.
- Do not operate the appliance with wet hands or when it comes in contact with water.
- Do not apply pressure on the open door.
- Do not use the appliance as a work surface or as a storage surface.
- Keep sparks and open flames away from the appliance when the door is open.
- Use only approved glass and jars for preserving.
- Do not place flammable products near the appliance.

**⚠ WARNING!**
Risk of damage to the appliance.

- To prevent damage or discoloration to the enamel:
  - do not place ovenware or objects directly on the cavity bottom.
  - do not place aluminum foil directly on the cavity bottom.
  - do not put water directly into the hot appliance.
  - do not leave moist dishes and food in the appliance after cooking.
  - be careful when removing or installing accessories.

- Enamel or stainless steel discoloration does not affect performance of the appliance.
- Use a deep pan for moist cakes, as fruit juices can cause permanent stains.
- Always cook with the appliance door closed.
- If the appliance is installed behind a furniture panel, do not close the panel during use or until the appliance is fully cooled to prevent heat and moisture damage.
- Concerning the lamp(s) inside this product and spare part lamps sold separately: These lamps are intended to withstand extreme physical conditions in household appliances, such as temperature, vibration, humidity, or are intended to signal information about the operational status of the appliance. They are not intended to be used in other applications and are not suitable for household room illumination.
- This product contains a light source of energy efficiency class G.
- Use only lamps with the same specifications.
- To repair the appliance contact the Authorised Service Centre. Use original spare parts only.

## 2.4 Care and cleaning

**⚠ WARNING!**
Risk of injury, fire, or damage to the appliance.

- Turn off and unplug the appliance before maintenance.
- Ensure the appliance is cold to avoid glass breakage. If the door glass panels are damaged, contact the authorized service centre for replacement.
- Be careful when you remove the door from the appliance, it is heavy.
- Clean and dry the appliance, its cavity, and accessories after each use to prevent steam condensation, corrosion, and surface deterioration.
- Check the product regularly for signs of deterioration that may make it unsuitable for food contact, such as cracks, blisters, delamination, shrinkage, stickiness, corrosion, or other visible changes in texture or appearance. Follow cleaning and care instructions to prevent deterioration.
- Use a microfibre cloth, warm water, and neutral detergents for cleaning the appliance and accessories. Do not use abrasive products, pads, solvents, sharp-edged or metal objects.
- Follow safety instructions on packaging when using an oven spray.

**Steam Cooking**

- Released Steam can cause burns:
  - Do not open the appliance door during the steam cooking operation.
  - Open the appliance door carefully after steam cooking.

## 2.5 Disposal

**⚠ WARNING!**
Risk of injury or suffocation.

- Contact your municipal authority for information on how to dispose of the appliance.
- Disconnect the appliance from the mains, then cut off and dispose of the electrical cable.

# 3. PRODUCT DESCRIPTION

## 3.1 General overview

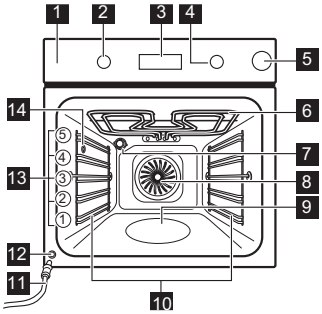


1 Control panel
2 Knob for the heating functions
3 Display
4 Control knob
5 Water tank
6 Heating element
7 Lamp
8 Fan
9 Cavity embossment - Aqua cleaning container
10 Shelf support, removable
11 Draining pipe
12 Water outlet valve
13 Shelf positions
14 Steam outlet

## 3.2 Control panel

| | |
|---|---|
| | Press to set timer functions. |
| | Press and hold to set the function: Fast Heat Up. |
| | Press to turn the appliance lamp on and off. |
| | Press and hold to set the function: Lock. |
| OK | Press to confirm your selection. |

**Display indicators**

| | |
|---|---|
| | The appliance is locked. |
| | Submenu: Assisted Cooking. |
| | Submenu: Cleaning. |
| | Submenu: Settings |
| | Fast Heat Up is activated. |
| | The water tank is empty. Refill the tank. |
| | The water tank is half full. |
| | The water tank is full. |
| | Steam cooking is activated. |
| | Minute minder is activated. |
| STOP | Cooking time is activated. |
| | Time Delayed Start is activated. |
| | Uptimer is activated. |
| | Progress bar - visually indicates when the appliance reaches the set temperature or when the cooking time comes to an end. |

**To turn on the appliance:**

1. Press the knobs. The knobs come out (selected models only).
2. Turn the knob for the heating functions to select a function.
3. Turn the control knob to adjust settings.

To turn off the appliance: turn the knob for the heating functions to the off position **0**.

# 4. BEFORE FIRST USE

## 4.1 Setting the time

After the first connection to the mains, wait until the display shows: **"00:00"** or **"12:00"** (depending on the model).

1. Turn the control knob to set the time.
2. Press OK.

## 4.2 Initial preheating and cleaning

1. Preheat the empty appliance to remove any odours. Ventilate the room.
2. Remove all accessories and shelf supports.
3. Set each function to maximum temperature and let the appliance operate for specified durations: 1 h, 15 min. Refer to Daily use.
4. Turn off the appliance and let it cool down.
5. Clean with a microfiber cloth, warm water, and mild detergent. Replace accessories and shelf supports.

# 5. DAILY USE

## 5.1 Cooking functions

| | |
|---|---|
| | **True Fan Cooking**: Even baking, tenderness, drying |
| | **Conventional Cooking / Aqua Clean**: Traditional baking / Cleaning |
| | **Humidity Low** (steam function): Meat, poultry, oven dishes, casseroles |
| | **Frozen Foods**: French fries, potato wedges, spring rolls |
| | **Pizza Function** (steam function up to 230°C): Baking pizza |
| | **Bottom Heat**: Baking cakes |
| | **Moist Fan Baking**: Baking |
| | **Grill**: Toasting, grilling |
| | **Turbo Grilling**: Roasting meat, browning |

The lamp may turn off automatically at a temperature below 80°C during some oven functions.

## 5.2 Setting: Heating functions

1. Turn the knob for the heating functions to select a heating function.
2. Turn the control knob to set the temperature.

Fast Heat Up - press and hold to shorten the heating time. It is available for some heating functions. Fan may turn on automatically.

## 5.3 Timer

1. Turn the knobs to select the cooking function and to set the temperature, if needed.
2. Press until the display shows a desired timer function:

**Minute minder**: Set a countdown. When the timer ends, the signal sounds.

STOP **Cooking time**: Set a countdown. When the timer ends, the signal sounds and the cooking stops.

**Time Delayed Start**: To postpone the start and / or end of cooking. When the timer ends, the signal sounds and the cooking stops.

3. Turn the control knob to set the time.
4. Press OK.
5. When the time ends, press OK and turn the knobs to the off position, if needed.

## 5.4 Steam Cooking

1. Press the water tank to open it.
2. Fill the water tank with cold tap water to the maximum level. Do not use other liquids.

Make sure not to exceed the maximum capacity of the steam system (approximately 350 ml when empty). If the tank is full, a symbol appears on the display and the signal sounds.

3. Push the water tank to its initial position.

4. You can set the steam cooking in two ways:
   - Turn the knob for the cooking functions to select and turn the control knob to set the temperature.
   - Turn the knob for the cooking functions to and turn the control knob to select . Press OK. Turn the control knob to select a function (S1 - S...) and if needed, set the temperature. Press OK twice.
5. Preheat the appliance before you insert the food. Refill the water tank during cooking if water tank indicator shows that the tank is empty.
6. When the cooking ends, turn the knob for the cooking functions to the off position to turn off the appliance. Carefully open the door. Released humidity can cause burns.
7. Always empty the water tank after each steam cooking to prevent scale buildup and to avoid malfunctions, such as water spilling from the steam outlet. Wait at least 60 min before emptying.

**Submenu: Steam Cooking**

| | Function | Description |
|---|---|---|
| **S1** | AirFry Plus | Combines steam and air frying for crispy, juicy, and healthier meals. |
| **S2** | Steam Regenerating | This function gently reheats leftovers with steam (110–130°C - moist reheat, 130–200°C - crispier reheat). |
| **S3** | Bread Baking | To bake bread. |

## 5.5 Emptying water tank

| Water tank indicator | |
|---|---|
| | The tank is full. |
| | The tank is half full. |
| | The tank is empty. Refill the tank. |

1. Turn off the appliance and make sure it is cold.
2. Connect the draining pipe **C** to the outlet valve **A** through the connector **B**.

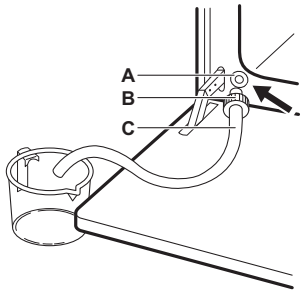


3. Keep the end of the pipe below the level of **A** and push **B** repeatedly to collect remaining water.
4. Detach **C** and **B** and dry the oven interior with a soft sponge.

## 5.6 Menu

Open the Menu to access Assisted Cooking dishes and settings.

1. Turn the knob for the cooking functions to .

The display shows , , , .

2. Turn the control knob and select the icon to enter submenu. Press OK.

## 5.7 Setting: Assisted Cooking

Assisted Cooking submenu consists of programmes that are designed for dedicated dishes. Programmes start with a suitable setting. You can adjust the time and the temperature during cooking.

1. Turn the knob for the heating functions to .
2. Turn the control knob to select . Press OK.
3. Turn the control knob to select a dish (P1 - P...). Press OK.
4. Turn the control knob to adjust the weight. Option is available for selected dishes. Press OK.
5. Place the food inside the appliance. Press OK.
6. When the function ends, check if the food is ready. Extend the cooking time, if needed.

**Submenu: Assisted Cooking**

| Legend | |
|---|---|
| | Weight adjustment available. |
| | Fill the water drawer with water for steam cooking. |
| | Preheat the appliance before you start cooking. |
| | Shelf level. Refer to Product description. |

The display shows **P** and a **number** of the dish that you can check in the table.

| | | |
|---|---|---|
| **P1** | **Roast beef, rare** | 1 - 1.5 kg; 4 - 5 cm thick<br>**2**; **baking tray**<br>Fry the meat for a few minutes in a hot pan. Insert to the appliance. |
| **P2** | **Roast beef, medium** | |
| **P3** | **Roast beef, well done** | |
| **P4** | **Steak, medium,** 180 - 220 g per piece; 3 cm thick<br>**3**; roasting dish on **wire shelf**<br>Fry the meat for a few minutes in a hot pan. Insert to the appliance. | |
| **P5** | **Beef roast / braised** (prime rib, thick flank), 1.5 - 2 kg<br>**2**; roasting dish on **wire shelf**<br>Fry the meat for a few minutes in a hot pan. Add liquid. Insert to the appliance. | |
| **P6** | **Roast beef, rare**[1)] | 1 - 1.5 kg; 4 - 5 cm thick<br>**2**; **baking tray**<br>Fry the meat for a few minutes in a hot pan. Insert to the appliance. |
| **P7** | **Roast beef, medium**[1)] | |
| **P8** | **Roast beef, well done**[1)] | |
| **P9** | **Fillet of beef, rare**[1)] | 0.5 - 1.5 kg; 5 - 6 cm thick<br>**2**; **baking tray**<br>Fry the meat for a few minutes in a hot pan. Insert to the appliance. |
| **P10** | **Fillet of beef, medium**[1)] | |
| **P11** | **Fillet of beef, done**[1)] | |
| **P12** | **Veal roast** (e.g. shoulder), 0.8 - 1.5 kg; 4 cm thick<br>**2**; roasting dish on **wire shelf**<br>Add liquid. Roast covered. | |
| **P13** | **Pork roast neck or shoulder,** 1.5 - 2 kg<br>**1**; roasting dish on **wire shelf**<br>Turn the meat after half of the cooking time. | |
| **P14** | **Pulled pork,** 1.5 - 2 kg [1)]<br>**2**; **baking tray**<br>Turn the meat after half of the cooking time to get an even browning. | |
| **P15** | **Pork loin, fresh,** 1 - 1.5 kg; 5 - 6 cm thick<br>**2**; roasting dish on **wire shelf**<br>Fry the meat for a few minutes in a hot pan. Insert to the appliance. | |
| **P16** | **Pork spare ribs,** 2 - 3 kg; use raw, 2 - 3 cm thin<br>**3**; **deep pan**<br>Add liquid to cover the bottom of a dish. Turn the meat after half of the cooking time. | |
| **P17** | **Lamb leg with bones,** 1.5 - 2 kg; 7 - 9 cm thick<br>**2**; roasting dish on **baking tray**<br>Add liquid. Turn the meat after half of the cooking time. | |
| **P18** | **Whole chicken,** 1 - 1.5 kg; fresh<br>**2**; casserole dish on **baking tray**<br>Turn the chicken after half of the cooking time to get an even browning. | |
| **P19** | **Half chicken,** 0.5 - 0.8 kg<br>**3**; **baking tray** | |
| **P20** | **Chicken breast,** 180 - 200 g per piece<br>**2**; casserole dish on **wire shelf**<br>Fry the meat for a few minutes in a hot pan. | |
| **P21** | **Chicken legs, fresh**<br>**3**; **baking tray**<br>If you marinated chicken legs first, set lower temperature and cook them longer. | |
| **P22** | **Duck, whole,** 2 - 3 kg<br>**2**; roasting dish on **wire shelf**<br>Put the meat on roasting dish. Turn the duck after half of the cooking time. | |
| **P23** | **Goose, whole,** 4 - 5 kg<br>**2**; **deep pan**<br>Put the meat on deep baking tray. Turn the goose after half of the cooking time. | |

| | |
|---|---|
| P24 | **Meat loaf,** 1 kg<br>**2**; **wire shelf** |
| P25 | **Whole fish, grilled,** 0.5 - 1 kg per fish<br>**2**; **baking tray**<br>Fill the fish with butter, spices and herbs. |
| P26 | **Fish fillet**<br>**3**; casserole dish on **wire shelf** |
| P27 | **Cheesecake**<br>**2**; ∅ 28 cm springform tin on **wire shelf** |
| P28 | **Apple cake**<br>**3**; **baking tray** |
| P29 | **Apple tart**<br>**2**; pie form on **wire shelf** |
| P30 | **Apple pie**<br>**1**; ∅ 22 cm pie form on **wire shelf** |
| P31 | **Brownies,** 2 kg of dough<br>**3**; **deep pan** |
| P32 | **Muffins**<br>**3**; muffin tray on **wire shelf** |
| P33 | **Loaf cake**<br>**2**; loaf pan on **wire shelf** |
| P34 | **Baked potatoes,** 1 kg<br>**2**; **baking tray**<br>Use whole potatoes with skin on. |
| P35 | **Wedges,** 1 kg<br>**3**; **baking tray** lined with baking paper<br>Cut potatoes into pieces. |
| P36 | **Grilled mixed vegetables,** 1 - 1.5 kg<br>**3**; **baking tray** lined with baking paper<br>Cut the vegetables into pieces. |
| P37 | **Croquettes, frozen,** 0.5 kg<br>**3**; **baking tray** |
| P38 | **Pommes, frozen,** 0.75 kg<br>**3**; **baking tray** |
| P39 | **Meat / vegetable lasagna with dry pasta sheets,** 1 - 1.5 kg<br>**1**; casserole dish on **wire shelf** |
| P40 | **Potato gratin** (raw potatoes), 1 - 1.5 kg<br>**1**; casserole dish on **wire shelf**<br>Rotate the dish after half of the cooking time. |
| P41 | **Pizza fresh, thin**<br>**2**; **baking tray** lined with baking paper |
| P42 | **Pizza fresh, thick**<br>**2**; **baking tray** lined with baking paper |
| P43 | **Quiche**<br>**2**; baking tin on **wire shelf** |
| P44 | **Baguette / Ciabatta / White bread,** 0.8 kg<br>**2**; **baking tray** lined with baking paper<br>More time needed for white bread. |
| P45 | **Whole grain / Rye / Dark bread,** 1 kg<br>**2**; **baking tray** lined with baking paper / loaf pan on **wire shelf** |

[1] Low temperature cooking.

## 5.8 Changing: Settings

1. Turn the knob for the heating functions to .
2. Turn the control knob to select . Press OK.
3. Turn the control knob to select the setting. Press OK.
4. Turn the control knob to adjust the value. Press OK.
5. Turn the knob for the heating functions to the off position to exit Menu.

**Submenu: Settings**

| | Setting | Value |
|---|---|---|
| 01 | Time of day | Change |
| 02 | Display brightness | 1 - 5 |
| 03 | Key tones | 1 - Beep, 2 - Click, 3 - Sound off |
| 04 | Buzzer volume | 1 - 4 |
| 05 | Uptimer | On / Off |

| | Setting | Value |
|---|---|---|
| **06** | Light | On / Off |
| **07** | Fast Heat Up | On / Off |
| **08** | Demo mode | Activation code: 2468 |
| **09** | Software version | Check |
| **10** | Reset all settings | Yes / No |

### 5.9 Lock

This function prevents an accidental change of the appliance function.

When activated while the appliance is in use, it locks the control panel, ensuring that the current cooking settings continue uninterrupted.

When activated while the appliance is off, it keeps the control panel locked, preventing the appliance from being turned on unintentionally.

- press and hold to turn on and off the function.

A signal sounds. - flashes 3 times when the lock is turned on.

### 5.10 Accessories

Accessories available depending on model. Scan the QR code to check how to use accessories supplied with your appliance. You can order optional accessories separately. For more information, please contact your local supplier.

Insert the accessory (wire shelf / tray) between the guide bars of the shelf support. Make sure that the shelf touches the back of the oven interior and the feet point down. A small indentation at the top increases safety and provides tilt protection. The rim around the shelf prevents cookware from slipping off the shelf.

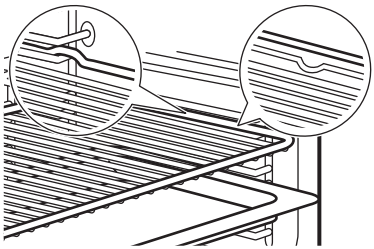

If your tray has a slope, position it towards the back of the oven interior.

If there is an inscription on the accessory, make sure it is facing you.

If you are using a tray with holes, place the tray / pan underneath to collect dripping liquids.

## 6. HINTS AND TIPS

### 6.1 Cooking recommendations

The temperature and cooking times in the tables are for guidance only. They depend on the recipes, quality and quantity of the ingredients used. If you cannot find the settings for a specific recipe, look for a similar one.

Count the shelf positions from the bottom of the oven floor.

**Symbols used in the tables:**

| | |
|---|---|
| | Food type |
| | Cooking function |
| °C | Temperature |
| | Shelf position |
| | Cooking time (min) |
| | Additional information |

## 6.2 Moist Fan Baking

For the best results follow suggestions listed in the table below.

| | °C | | | |
|---|---|---|---|---|
| Sweet rolls, 16 pieces | 180 | 2 | 20 - 30 | 1) |
| Rolls, 9 pieces | 180 | 2 | 30 - 40 | 1) |
| Pizza, frozen, 0.35 kg | 220 | 2 | 10 - 15 | 2) |
| Swiss Roll | 170 | 2 | 25 - 35 | 1) |
| Brownie | 175 | 3 | 25 - 30 | 1) |
| Soufflè, 6 pieces | 200 | 3 | 25 - 30 | 3) |
| Sponge flan base | 180 | 2 | 15 - 25 | 4) |
| Victoria sandwich | 170 | 2 | 40 - 50 | 5) |
| Poached fish, 0.3 kg | 180 | 3 | 20 - 25 | 1) |
| Whole fish, 0.2 kg | 180 | 3 | 25 - 35 | 1) |
| Fish fillet, 0.3 kg | 180 | 3 | 25 - 30 | 6) |
| Poached meat, 0.25 kg | 200 | 3 | 35 - 45 | 1) |
| Shashlik, 0.5 kg | 200 | 3 | 25 - 30 | 1) |
| Cookies, 16 pieces | 180 | 2 | 20 - 30 | 1) |
| Macaroons, 24 pieces | 180 | 2 | 25 - 35 | 1) |
| Muffins, 12 pieces | 170 | 2 | 30 - 40 | 1) |
| Savory pastry, 20 pieces | 180 | 2 | 25 - 30 | 1) |
| Short crust biscuits, 20 pieces | 150 | 2 | 25 - 35 | 1) |
| Tartlets, 8 pieces | 170 | 2 | 20 - 30 | 1) |
| Vegetables, poached, 0.4 kg | 180 | 3 | 35 - 45 | 1) |
| Vegetarian omelette | 200 | 3 | 25 - 30 | 6) |
| Mediterranean vegetables, 0.7 kg | 180 | 4 | 25 - 30 | 1) |

1) Use baking tray or dripping pan.
2) Use wire shelf.
3) Use ceramic ramekins on wire shelf.
4) Use flan base tin on wire shelf.
5) Use baking dish on wire shelf.
6) Use pizza pan on wire shelf.

## 6.3 Information for test institutes

Tests according to IEC 60350-1.

| | | °C | | |
|---|---|---|---|---|
| Small cakes, 20 per tray | | | | |
| | 3 | 150 - 170 | 35 - 40 | 1)2) |
| | 3 | 140 - 160 | 35 - 40 | 1)2) |
| | 2 and 4 | 130 - 150 | 45 - 50 | 1)2) |
| Apple pie, 2 tins Ø20 cm | | | | |
| | 2 | 180 | 70 - 90 | 3) |
| | 2 | 160 | 70 - 90 | 3) |
| Fatless sponge cake, cake mould Ø26 cm | | | | |
| | 2 | 170 | 40 - 50 | 3) |
| | 2 | 170 | 45 - 50 | 3)2) |
| | 1 and 3 | 170 | 50 - 60 | 3)2) |
| Shortbread | | | | |
| | 3 | 140 - 150 | 20 - 40 | 1) |
| | 2 and 4 | 140 - 150 | 25 - 45 | 1) |
| | 3 | 140 - 150 | 25 - 45 | 1) |
| Toast | | | | |
| | 4 | max. | 1 - 5 | 3)2) |

1) Use Baking tray.
2) Preheat the appliance for 10 minutes.
3) Use Wire shelf.

# 7. CARE AND CLEANING

## 7.1 Notes on cleaning

- Use a cleaning solution for metal surfaces.
- Clean and check the door gasket around the frame of the cavity.
- Use the liquid descaler recommended by the manufacturer to remove limestone residue.
- Moisture can condense in the appliance or on the door glass panels. To decrease the condensation, let the appliance work for 10 minutes before cooking. Do not store food in the appliance for longer than 20 minutes.
- Do not clean the accessories in a dishwasher.

## 7.2 Removing the shelf supports

1. Make sure the appliance is cold.
2. Pull the front of the shelf support away from the side wall.
3. Pull the rear end of the shelf support away from the side wall and remove it.
4. Put the shelf supports back to the initial position. Repeat the steps in the reverse order.

If the telescopic runners are supplied, their retaining pins must point to the front.

## 7.3 Aqua Clean

This cleaning procedure uses humidity to remove remaining fat and food particles from the appliance.

1. Pour water into the cavity embossment: 300 ml.
2. Select Menu ☰ / Cleaning ㎜
3. Press OK.

**Duration:** 30 min
When the cleaning ends the signal sounds. The appliance turns off.

4. Wait until the appliance is cold. Dry the cavity with a soft cloth.

## 7.4 Steam Cleaning

This cleaning procedure uses steam to remove remaining fat and food particles from the appliance.

1. Make sure that the appliance is cold.
2. Remove all accessories.
3. Clean the oven interior and the inner door glass with a dry soft cloth.
4. Turn the knob for the cooking functions to ☰ to enter Menu.
5. Turn the control knob to select ㎜ and press OK.
6. Fill the water tank with cold tap water to the maximum level (up to 350 ml).
7. Press OK. When the cleaning starts, the lamp is off.

**Duration:** 30 min
When the cleaning ends the signal sounds. The appliance turns off.

8. Wait until the appliance is cold. Dry the cavity with a soft cloth.

## 7.5 Cleaning the water tank

This cleaning procedure removes and prevents limescale buildup in the steam system.

1. Empty the water tank. Refer to Daily use, Emptying water tank.
2. Pour 250 ml of the manufacturer recommended liquid descaler into the water tank.
3. Wait for 60 min. Empty the water tank.
4. Pour 350 ml of water into the water tank to rinse the tank. Empty the water tank.
5. Clean the drain pipe with warm water and a mild detergent.

The descaling frequency depends on the water hardness and the frequency of steam cooking.

Contact your water supplier to check the water hardness level.

| Water hardness (°fH) | Steam usage | Clean the water tank every (months): |
|---|---|---|
| 0 - 15 (soft to medium) | Often ( ≥1 time/week) | 12 |
| | Rarely (≤1 time/month) | 24 |
| ≥16 (hard to very hard) | Often ( ≥1 time/week) | 6 |
| | Rarely (≤1 time/month) | 12 |

## 7.6 Removing and installing door

You can remove the oven door and the internal glass panels to clean them. Do not use the appliance without the glass panels.

1. Open the door fully and hold both hinges.
2. Lift and pull the latches until they click.

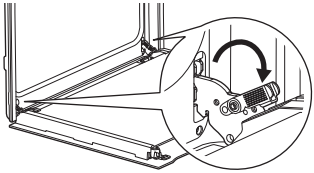

3. Close the oven door halfway to the first opening position. Then lift and pull to remove the door from its seat.

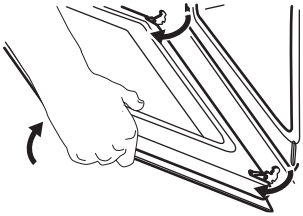

4. Put the door on a soft cloth on a stable surface.
5. Hold the door trim **A** on the top edge of the door at the two sides and push inwards to release the clip seal.

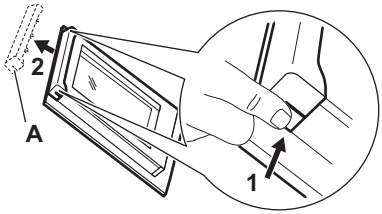


6. Pull the door trim to the front to remove it.
7. Hold the door glass panels on their top edge one by one and pull them up out of the guide. Make sure the glass slides out of the supports completely.

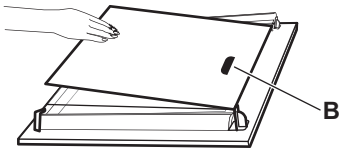


8. Clean the glass panels with water and soap. Dry the glass panels carefully. Do not clean the glass panels in the dishwasher.
9. After cleaning, install the glass panels and the oven door.

Make sure that you put the glass panels back in the correct sequence. Check for the symbol / printing on the side of the glass panel. The printing zone **B** (if present) must face the oven interior. If the door is installed correctly, you will hear a click when closing the latches.

## 7.7 Replacing the lamp

Disconnect the appliance from the mains and wait until it is cold.

Replace the lamp with a suitable 300 °C heat-resistant lamp.

**Back lamp**

1. Turn the glass cover to remove it.
2. Clean the glass cover.
3. Replace the lamp.
4. Install the glass cover.

# 8. TROUBLESHOOTING

If you cannot find a solution to the problem yourself, contact your dealer or an Authorised Service Centre. Service details are on the rating plate, located on the front frame. It is visible when you open the door. Do not remove the rating plate.

If the display shows an error code that is not in this table, turn the house fuse off and on to restart the appliance. If the error code recurs contact an Authorised Service Centre.

**You cannot activate or operate the appliance.** - The appliance is not connected to an electrical supply or it is connected incorrectly.

**The appliance does not heat up.**

- Lock is activated.
- Automatic switch-off is activated.

**The lamp does not work.** - The lamp is burnt out. Replace the lamp.

**The lamp is turned off.** - Moist Fan Baking - is activated.

**The door gasket is damaged.** - Do not use the appliance. Contact an Authorised Service Centre.

**There is the water leaks from the steam outlet.** - There is too much water in the water tank. Refer to Daily use, Emptying water tank.

**The water tank empty indicator is on.** - There is no water in the tank. Fill the water tank. If the indicator is still on refer to Care and cleaning, Cleaning the water tank.

**The steam cooking does not work.** - There is a lime residue in the steam outlet opening - Cleaning the water tank (refer to Care and cleaning) or if there is no water in the tank - fill the water tank.

**It takes more than three minutes to empty the water tank or the water leaks from the steam outlet opening.** - There is a lime residue in the water tank. Refer to Care and cleaning, Cleaning the water tank.

**The display shows "00:00".** - There was a power cut. Set the time of day.

# 9. ENERGY EFFICIENCY

## 9.1 Product Information Sheet and Product Information according to (EU) No 65/2014 and (EU) No 66/2014

| | |
|---|---|
| Supplier's name | Electrolux |
| Model identification | KOCDH76X 949494268 |
| Energy Efficiency Index | 81.2 |
| Energy efficiency class | A+ |
| Energy consumption with a standard load, conventional mode | 0.93 kWh/cycle |
| Energy consumption with a standard load, fan-forced mode | 0.69 kWh/cycle |
| Number of cavities | 1 |
| Heat source | Electricity |
| Volume | 72 l |
| Type of oven | Built-In Oven |
| Mass | 32.6 kg |

Appliance tested according to: EN IEC 60350-1.

## 9.2 Information requirements according to (EU) No 2023/826

| | |
|---|---|
| Power consumption in standby | 0.8 W |
| Maximum time needed for the equipment to automatically reach the applicable low power mode | 20 min |

Appliance tested according to: EN 50564.

## 9.3 Energy saving tips

- Keep the door closed during cooking and avoid opening it often.
- Keep the door gasket clean and make sure it is well fixed in its position.
- Use metal or dark, non-reflective cookware.
- Skip preheating unless needed.
- Minimize breaks between baking multiple dishes.
- When possible, use the cooking functions with fan to save energy (selected models only).
- Use residual heat to keep food warm. Reduce the appliance temperature to minimum 3 - 10 min before the end of cooking.
- Turn off the lamp during cooking unless needed.
- Moist Fan Baking (selected models only) - this function was used to comply with the energy efficiency class and ecodesign requirements (according to EU 65/2014 and EU 66/2014). Tests according to: IEC/EN 60350-1. The oven door should be closed during cooking so that the function is not interrupted and the oven operates with the highest energy efficiency possible. When you use this function the lamp automatically turns off. In some models it takes 30 sec.
- Automatic switch-off - for safety reasons, if the cooking function is active and no settings are changed, the appliance will turn off automatically after a certain period of time. To operate a cooking function longer, set the cooking time. Automatic switch-off does not apply with Time Delayed Start function or when the lamp is on.

– 12.5 h: 30-115 °C
– 8.5 h: 120-195 °C
– 5.5 h: 200-245 °C
– 3 h: 250-maximum °C

## 10. ENVIRONMENTAL CONCERNS

Recycle materials with the symbol . Put the packaging in relevant containers to recycle it. Help protect the environment and human health by recycling waste of electrical and electronic appliances. Do not dispose of appliances marked with the symbol with the household waste. Return the product to your local recycling facility or contact your municipal office.




CE

701140254-A-172026