DS15-545WH1

NEOMOUNTS DS15-545WH1 TABLET HOLDER DESK CLAMP 4.7-12.9" - UNIVERSAL - FULL MOTION

SPECIFICATIONS

GENERAL

Min. screen size*	4.7
Max. screen size*	12.9
Min. weight	0
Max. weight	1
Screens	1
Desk mount	Clamp

FUNCTIE

Type	Full motion
Height adjustment	40 cm
Depth adjustment	38 cm
Tilt (degrees)	270°
Swivel (degrees)	104°
Rotate (degrees)	360°
Height	62,5 cm
Width	6,4 cm
Depth	21 cm

INFORMATION

Color	White
Main material	Steel
Warranty	5 year

*Please note: The inch sizes stated are just an indication, combined with the weight and VESA sizes. The maximum weight and VESA size are absolute restrictions for the products and should not be exceeded.

Neomounts DS15-545WH1 Tablet holder desk clamp - 4.7-12.9" - universal - full motion - white

The Neomounts DS15-545WH1 is an universal tablet mount for tablets from 4,7" up to 12,9" with a weight capacity of 1 kg. The tablet mount has 3 pivoting points and is ideal for hands-free video calling, watching a movie, playing a game or to use a tablet as a second screen.

The integrated ball joint allows the mount to rotate 360° so you can switch between portrait and landscape position. Additionally, the clever tilt (270°) and swivel (104°) options allow the stand to further change to the ideal viewing angle. Soft rubber pads protect your device from any scratches and the solid base with anti-skid silicon pads ensure solid positioning of your device.

Neomounts®

DS15-545WH1

NEOMOUNTS DS15-545WH1 TABLET HOLDER DESK CLAMP 4.7-12.9" - UNIVERSAL - FULL MOTION

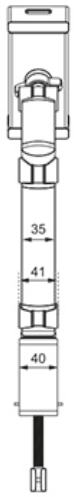

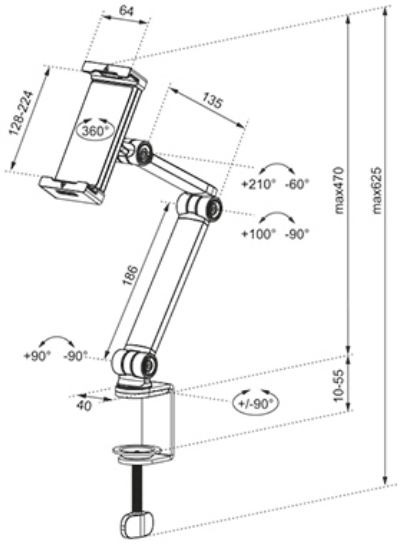

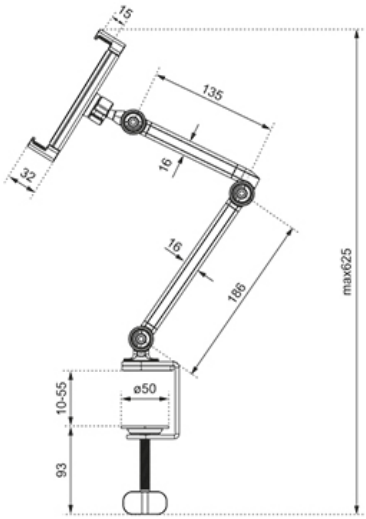

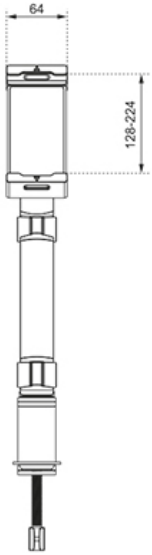

Neomounts

Measuring unit: mm