Electrolux

electrolux.com/register

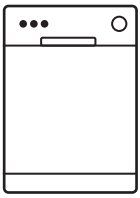

ESA47300SW

EN User Manual | **Dishwasher**

Welcome to Electrolux! Thank you for choosing our appliance.

Get usage advice, brochures, troubleshooting, service and repair information:
www.electrolux.com/support

Subject to change without notice.

CONTENTS

1. SAFETY INFORMATION.....2
2. SAFETY INSTRUCTIONS.....4
3. PRODUCT DESCRIPTION.....5
4. CONTROL PANEL.....6
5. PROGRAMMES.....7
6. OPTIONS.....9
7. SETTINGS.....9
8. BEFORE FIRST USE.....12
9. DAILY USE.....13
10. HINTS AND TIPS.....15
11. CARE AND CLEANING.....16
12. TROUBLESHOOTING.....18
13. TECHNICAL DATA.....21
14. ENVIRONMENTAL CONCERNS.....22

1. ⚠ SAFETY INFORMATION

Before the installation and use of the appliance, carefully read the supplied instructions. The manufacturer is not responsible for any injuries or damage that are the result of incorrect installation or usage. Always keep the instructions in a safe and accessible location for future reference.

1.1 Children and vulnerable people safety

- This appliance can be used by children aged from 8 years and above and persons with reduced physical, sensory or mental capabilities or lack of experience and knowledge if they have been given supervision or instruction concerning the use of the appliance in a safe way and understand the hazards involved. Children of less than 8 years of age and persons with very extensive and complex disabilities shall be kept away from the appliance unless continuously supervised.

- Children should be supervised to ensure that they do not play with the appliance.
- Keep detergents away from children.
- Keep children and pets away from the appliance when the door is open.
- Children shall not carry out cleaning and user maintenance of the appliance without supervision.

1.2 General Safety

- This appliance is for cleaning household-type dishes and tableware only.
- This appliance is designed for single household domestic use in an indoor environment.
- This appliance may be used in offices, hotel guest rooms, bed & breakfast guest rooms, farm guest houses and other similar accommodation where such use does not exceed (average) domestic usage levels.
- Do not change the specification of this appliance.
- The operating water pressure (minimum and maximum) must be between 0.05 (0.5) / 1 (10) MPa (bar).
- Follow the maximum number of 13 place settings.
- The appliance door should not be left in an open position to avoid the tripping hazard.
- If the supply cord is damaged, it must be replaced by the manufacturer, its Authorised Service Centre or similarly qualified persons in order to avoid a hazard.
- WARNING: Knives and other utensils with sharp points must be loaded in the basket with their points down or placed in a horizontal position.
- Before any maintenance operation, deactivate the appliance and disconnect the mains plug from the socket.
- Do not use high pressure water sprays and/or steam to clean the appliance.
- If the appliance has ventilation openings in the base, they must not be covered e.g. by a carpet.

- The appliance is to be connected to the water mains using the new supplied hose-sets. Old hose sets must not be reused.

2. SAFETY INSTRUCTIONS

2.1 Installation

> ⚠ **WARNING!**
> Only a qualified person must install this appliance.

- Remove all the packaging.
- Do not install or use a damaged appliance.
- Follow the installation instructions supplied with the appliance.
- Always take care when moving the appliance as it is heavy. Always use safety gloves and enclosed footwear.
- Do not install or use the appliance where the temperature is less than 0 °C.
- Install the appliance in a safe and suitable place that meets installation requirements.

2.2 Electrical connection

> ⚠ **WARNING!**
> Risk of fire and electric shock.

- Warning: this appliance is designed to be installed / connected to a grounding connection in the building.
- Make sure that the parameters on the rating plate are compatible with the electrical ratings of the mains power supply.
- Always use a correctly installed shockproof socket.
- Do not use multi-plug adapters and extension cables.
- Make sure not to cause damage to the mains plug and to the mains cable. Should the mains cable need to be replaced, this must be carried out by our Authorised Service Centre.
- Connect the mains plug to the mains socket only at the end of the installation. Make sure that there is access to the mains plug after the installation.
- Do not pull the mains cable to disconnect the appliance. Always pull the mains plug.

2.3 Water connection

- Do not cause damage to the water hoses.
- Before connection to new pipes, pipes not used for a long time, where repair work has been carried out or new devices fitted (water meters, etc.), let the water flow until it is clean and clear.
- Ensure that there are no visible water leaks during and after the first use of the appliance.
- If the water inlet hose is damaged, immediately close the water tap and disconnect the mains plug from the mains socket. Contact the Authorised Service Centre to replace the water inlet hose.

2.4 Use

- Do not put flammable products or items that are wet with flammable products in, near or on the appliance.
- Dishwasher detergents are dangerous. Follow the safety instructions on the detergent packaging.
- Do not drink and play with the water in the appliance.
- Do not remove the dishes from the appliance until the programme is complete. Some detergent may remain on the dishes.
- Do not store items or apply pressure on the open door of the appliance.
- The appliance can release hot steam if you open the door while a programme operates.

2.5 Service

- To repair the appliance contact the Authorised Service Centre. Use original spare parts only.
- Please note that self-repair or non-professional repair can have safety

consequences and might void the guarantee.
- The following spare parts are available for at least 7 years after the model has been discontinued: motor, circulation and drain pump, heaters and heating elements, including heat pumps, piping and related equipment including hoses, valves, filters and aquastops, structural and interior parts related to door assemblies, printed circuit boards, electronic displays, pressure switches, thermostats and sensors, software and firmware including reset software. The following spare parts are available for at least 10 years after the model has been discontinued: door hinge and seals, other seals, spray arms, drain filters, interior racks and plastic peripherals such as baskets and lids. The duration may be longer in your country. For further information, please visit our website.
- Please note that some of these spare parts are only available to professional repairers, and that not all spare parts are relevant for all models.
- Concerning the lamp(s) inside this product and spare part lamps sold separately: These lamps are intended to withstand extreme physical conditions in household appliances, such as temperature, vibration, humidity, or are intended to signal information about the operational status of the appliance. They are not intended to be used in other applications and are not suitable for household room illumination.

2.6 Disposal

⚠ WARNING!

Risk of injury or suffocation.

- Disconnect the appliance from the mains supply.
- Cut off the mains cable and discard it.
- Remove the door catch to prevent children and pets to get closed in the appliance.

3. PRODUCT DESCRIPTION

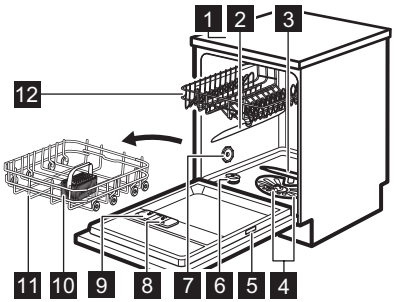

1 Worktop
2 Upper spray arm
3 Lower spray arm
4 Filters
5 Rating plate
6 Salt container
7 Air vent
8 Rinse aid dispenser
9 Detergent dispenser
10 Cutlery basket
11 Lower basket
12 Upper basket

4. CONTROL PANEL

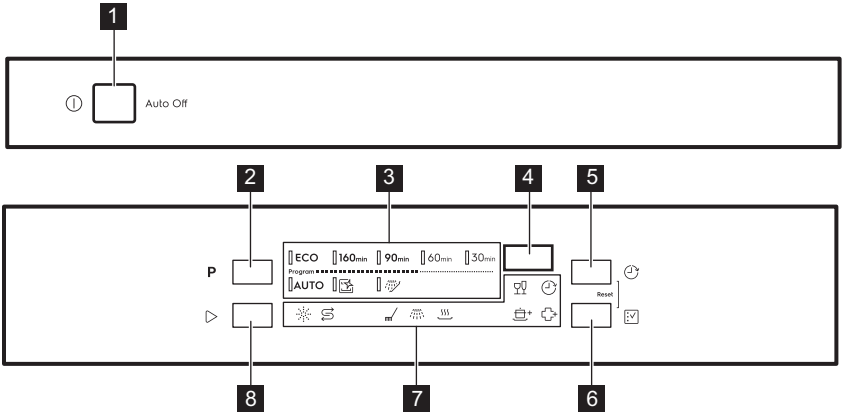

1 On/off button
2 **Program** button
3 Programme indicators
4 Display
5 **Delay** button
6 **Option** button
7 Indicators
8 **Start** button

4.1 Indicators

Indicator	Description
	Salt indicator. It is on when the salt container needs refilling. It is always off while the programme operates.
	Rinse aid indicator. It is on when the rinse aid dispenser needs refilling. It is always off while the programme operates.
	Washing phase indicator. It is on when the washing phase operates.
	Rinsing phase indicator. It is on when the rinsing phase operates.
	Drying phase indicator. It is on when you select a programme with the drying phase. It flashes when the drying phase operates.
	Delay indicator. It is on when you set the delay start.
	GlassCare indicator.
	ExtraPower indicator.
	ExtraHygiene indicator.

5. PROGRAMMES

The order of the programmes in the table may not reflect their sequence on the control panel.

Programme	Dishwasher load	Degree of soil	Programme phases	Options
ECO 1)	Crockery, cutlery, pots, pans	Normal, lightly dried-on	• Prewash • Dishwashing 55°C • Intermediate rinse • Final rinse 50°C • Drying • AirDry 2)	• ExtraPower • GlassCare • ExtraHygiene
160min	Crockery, cutlery, pots, pans	Normal to heavy, dried-on	• Prewash • Dishwashing 60°C • Intermediate rinse • Final rinse 60°C • Drying • AirDry 2)	• ExtraPower • GlassCare • ExtraHygiene
90min	Crockery, cutlery, pots, pans	Normal, lightly dried-on	• Dishwashing 60°C • Intermediate rinse • Final rinse 55°C • Drying • AirDry 2)	• ExtraPower • GlassCare • ExtraHygiene
60min	Crockery, cutlery	Fresh, lightly dried-on	• Dishwashing 60°C • Intermediate rinse • Final rinse 55°C • AirDry 2)	• ExtraPower • GlassCare • ExtraHygiene
30min	Crockery, cutlery	Fresh	• Dishwashing 45°C • Intermediate rinse • Final rinse 45°C • AirDry 2)	• ExtraPower • GlassCare • ExtraHygiene
AUTO 3)	Crockery, cutlery, pots, pans	All	• Prewash • Dishwashing 50 - 60°C • Intermediate rinse • Final rinse 60°C • Drying • AirDry 2)	
4)	None	Cleaning the appliance interior	• Cleaning 70°C • Intermediate rinse • Final rinse • AirDry 2)	

Programme	Dishwasher load	Degree of soil	Programme phases	Options
5)	All	All	• Prewash	

1) This programme offers the most efficient use of water and energy consumption for crockery and cutlery with normal soil. This is the standard programme for test institutes. This programme is used to assess compliance with the Ecodesign Comission Regulation (EU) 2019/2022.

2) Automatic door opening during the drying phase. Refer to "Settings" chapter.

3) The appliance senses the degree of soil and the quantity of items in the baskets. It automatically adjusts the temperature and the quantity of water, the energy consumption and the programme duration.

4) This programme is designed to clean the inside of the appliance effectively and efficiently. It removes limescale and grease buildup. The programme should be run at least once every 2 months with a descaler or a cleaning product designed for dishwashers and without any load.

5) With this programme, you can quickly rinse off food remains from dishes and prevent odours forming in the appliance. Do not use detergent with this programme.

5.1 Consumption values

Programme 1)2)	Water (l)	Energy (kWh)	Duration (min)
ECO	9.9	0.835	240
160min	11.6	1.170	160
90min	11.7	1.034	90
60min	12.0	0.990	60
30min	8.2	0.540	30
AUTO	11.5	1.169	170
	10.1	0.609	60
	4.3	0.013	15

1) The pressure and the temperature of the water, the variations of the mains supply, the options, the quantity of dishes and the degree of soil can change the values.

2) The values for programmes other than ECO are indicative only.

5.2 Information for test institutes

To receive the necessary information for conducting performance tests (e.g. according to: EN60436), send an email to:

info.test@dishwasher-production.com

In your request, include the product number code (PNC) from the rating plate.

For any other questions regarding your dishwasher, refer to the service book provided with your appliance.

6. OPTIONS

- Desired options must be activated every time before you start a programme. It is not possible to activate or deactivate options while a programme is running.
- The option button toggles between the available options and their possible combinations.
- Not all options are compatible with each other. If you select non compatible options, the appliance automatically deactivates one or more of them. Only the indicators of the still active options are on.
- If an option is not applicable to a programme, the related indicator is off or it flashes quickly for a few seconds and then goes out.
- Activating options can affect the water and energy consumption as well as the programme duration.

6.1 GlassCare

This option protects a delicate load, glassware in particular, from damaging. It prevents rapid changes in the dishwashing temperature of the selected programme and reduces it to 45 °C.

How to activate GlassCare

Press ☑ until the indicator is on.
The display shows the updated programme duration.

6.2 ExtraPower

This option improves the dishwashing results of the selected programme. It increases the wash temperature and duration.

How to activate ExtraPower

Press ☑ until the indicator is on.
The display shows the updated programme duration.

6.3 ExtraHygiene

This option provides better cleaning results by keeping the temperature between 65 and 70 °C for at least 10 minutes during the last rinsing phase.

How to activate ExtraHygiene

Press ☑ until the indicator is on.
The display shows the updated programme duration.

7. SETTINGS

7.1 Programme selection mode and user mode

When the appliance is in programme selection mode, you can set a programme and enter user mode.

You can also view the number of completed dishwashing cycles.

Settings available in the user mode:
- The level of water softener according to the water hardness.
- Activation or deactivation of the rinse aid empty notification.
- Activation or deactivation of the AirDry.
- Factory reset.

The saved settings remain valid until you change them again.

How to set the programme selection mode

The appliance is in programme selection mode when the programme indicator ECO is on and the display shows the programme duration.

After activation, the appliance is in programme selection mode by default. If not,

set the programme selection mode the following way:

Press and hold simultaneously ⏲ and ☑ until the appliance is in programme selection mode.

How to enter user mode

Make sure the appliance is in programme selection mode.

To enter user mode, press and hold simultaneously ⏲ and ☑ until the indicators ECO, 160min and 90min flash and the display is blank.

7.2 Water softener

The water softener removes minerals from the water supply, which would have a negative effect on the washing results and on the appliance.

The higher the content of these minerals, the harder your water is. Water hardness is measured in equivalent scales.

The water softener level should be adjusted according to the water hardness of your water supply. The adjustment is necessary regardless of the detergent type used to ensure good dishwashing results and to keep the salt indicator active. Your local water authority can advise you on the water hardness in your area. The default factory setting is level 5.

ⓘ

Multi-tabs containing salt are not effective enough to soften hard water.

Water hardness

German degrees (°dH)	French degrees (°fH)	mmol/l	mg/l (ppm)	Clarke degrees	Water softener level
47 - 50	84 - 90	8.4 - 9.0	835 - 904	58 - 63	10
43 - 46	76 - 83	7.6 - 8.3	755 - 834	53 - 57	9
37 - 42	65 - 75	6.5 - 7.5	645 - 754	46 - 52	8
29 - 36	51 - 64	5.1 - 6.4	505 - 644	36 - 45	7
23 - 28	40 - 50	4.0 - 5.0	395 - 504	28 - 35	6
19 - 22	33 - 39	3.3 - 3.9	325 - 394	23 - 27	5
15 - 18	26 - 32	2.6 - 3.2	255 - 324	18 - 22	4
11 - 14	19 - 25	1.9 - 2.5	185 - 254	13 - 17	3
4 - 10	7 - 18	0.7 - 1.8	70 - 184	5 - 12	2
<4	<7	<0.7	<70	< 5	1

The water softener undergoes an automatic regeneration process. [1)]

How to set the water softener level

Make sure the appliance is in user mode.

[1)] For the correct water softener operation, the resin of the softener device needs to be regenerated regularly. This process is automatic and is part of the normal dishwasher operation. The frequency of regeneration depends on the water softener level setting. The higher the level, the more frequent the regeneration. At high levels, regeneration occurs twice in a cycle: during dishwashing and after the final rinse. At lower levels, regeneration occurs only after the final rinse. The softener rinse occurs at the beginning of the successive cycle. At high levels, it additionally occurs at the end of dishwashing. The rinsing of the softener ends with a complete drain. The regeneration increases the duration of the programme by maximum 5 min, the water consumption by maximum 4 l, and the energy consumption by 2 Wh. In the currently applicable standard laboratory conditions with water hardness 2.5 mmol/l (water softener: level 3), the regeneration will occur every 62 l of used water. Water temperature, water pressure and variations of the mains supply can change the values.

1. Press **P**.
   - The indicator **ECO** still flashes.
   - The remaining indicators are off.
   - The display shows the current setting: e.g. 5 L = level 5.
2. Press **P** repeatedly to change the setting.
3. Press the on/off button to confirm the setting.

7.3 The rinse aid empty notification

The rinse aid helps to dry the dishes without streaks and stains. It is automatically released during the final rinse.

When the rinse aid chamber is empty, the rinse aid indicator turns on. If the drying results are satisfactory while using multi-tablets only, you can deactivate the notification for refilling the rinse aid. However, for best drying performance, always use rinse aid.

If standard detergent or multi-tablets without rinse aid are used, activate the notification to keep the rinse aid refill indicator active.

How to deactivate the rinse aid empty notification

Make sure the appliance is in user mode.

1. Press ▷.
   - The indicator **160min** still flashes.
   - The remaining indicators are off.
   - The display shows the current setting.
     - 0 d = the rinse aid empty notification is deactivated.
     - 1 d = the rinse aid empty notification is activated.
2. Press ▷ to change the setting.
3. Press the on/off button to confirm the setting.

7.4 AirDry

AirDry improves the drying results with less energy consumption. The appliance door opens automatically during the drying phase and remains ajar. Deactivating the function may reduce the drying performance.

AirDry is automatically activated with all programmes other than (if applicable).

The duration of the drying phase and the door opening time vary depending on the selected programme and options.

When AirDry opens the door, the display shows the remaining time of the running programme.

> ⚠ **CAUTION!**
>
> Do not try to close the appliance door within 2 minutes after automatic opening. This can cause damage to the appliance. If, afterwards, the door is closed for at least 3 minutes, the running programme ends.

How to deactivate AirDry

Make sure the appliance is in user mode.

1. Press ⏲.
   - The indicator **90min** still flashes.
   - The remaining indicators are off.
   - The display shows the current setting:
     - 0 0 = AirDry is deactivated.
     - 1 0 = AirDry is activated.
2. Press ⏲ to change the setting.
3. Press the on/off button to confirm the setting.

7.5 Factory reset

Factory reset restores the factory defaults. Before the reset, make sure the appliance is in user mode.

Press and hold ▷ and ☑ for 5 seconds.
The displays shows _ _ _ for about 5 seconds.
The appliance returns to programme selection mode.

> ⓘ
>
> Factory reset does not reset the cycle counter.

7.6 Cycle counter

You can view the number of completed dishwashing cycles in the cycle counter.

1. Press the on/off button to activate the dishwasher. Make sure that the appliance is in programme selection mode.
2. Press and hold ▷ and ⁝✓ for 5 seconds.

The displays shows **uC** and then the number of cycles.

Press any button to exit the cycle counter.

ⓘ

After reaching 65535, the cycle counter restarts.

8. BEFORE FIRST USE

1. **Adjust the level of the water softener according to the hardness of the water supply.**
2. Fill the salt container.
3. Fill the rinse aid dispenser.
4. Open the water tap.
5. Run a programme with detergent to remove any residues from the manufacturing process. Do not put dishes in the baskets.

After starting the programme, the appliance recharges the resin in the water softener for up to 5 minutes. The washing phase starts only after this procedure is complete. The procedure is repeated periodically.

8.1 The salt container

⚠ **CAUTION!**

Use only regeneration salt for dishwashers. Do not use kitchen salt.

The salt is used to recharge the resin in the water softener and to assure good washing results in daily use.

How to fill the salt container

1. Turn the cap of the salt container counterclockwise and remove it.
2. Put 1 litre of water in the salt container (only for the first time).
3. Fill the salt container with 1 kg of salt (until it is full).

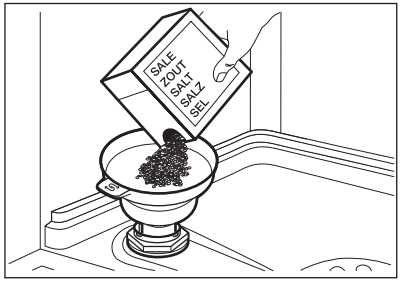

4. Carefully shake the funnel by its handle to get the last granules inside.
5. Remove the salt around the opening of the salt container.

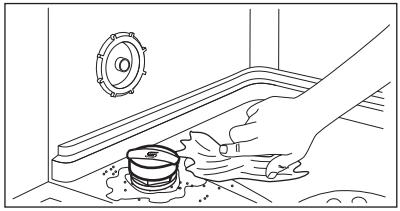

6. Turn the cap clockwise to close the salt container.

⚠ **CAUTION!**

Water and salt can come out of the salt container when you fill it. To prevent corrosion, fill the salt container and then immediately start a complete dishwashing cycle with detergent.

8.2 How to fill the rinse aid dispenser

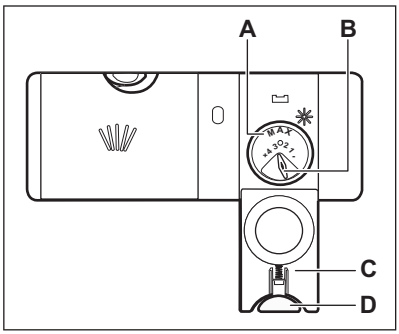

⚠ CAUTION!

The compartment (**A**) is for rinse aid only. Do not fill it with detergent.

⚠ CAUTION!

Only use rinse aid designed specifically for dishwashers.

1. Press the release button (**D**) to open the lid (**C**).
2. Fill the dispenser (**A**) until the rinse aid reaches the marking "MAX".
3. Remove the spilled rinse aid with an absorbent cloth to prevent excessive foam formation.
4. Close the lid. Make sure that the release button locks into position.

ⓘ

You can turn the selector of the released quantity (**B**) between position 1 (lowest quantity) and position 4 or 6 (highest quantity).

9. DAILY USE

1. Open the water tap.
2. Press the on/off button to activate the appliance.

Make sure that the appliance is in programme selection mode.

- If the salt indicator is on, fill the salt container.
- If the rinse aid indicator is on, fill the rinse aid dispenser.

3. Load the baskets.
4. Add the detergent.
5. Set and start a programme suitable for the type of load and the degree of soil.

9.1 Using the detergent

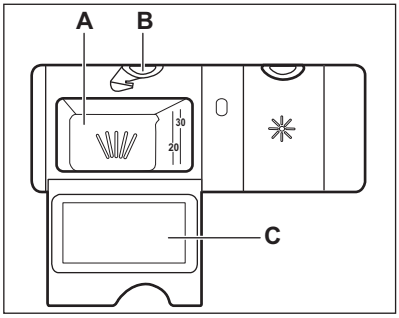

⚠ CAUTION!

Only use detergent specifically designed for dishwashers.

1. Press the release button (**B**) to open the lid (**C**).
2. Put the detergent, in powder or tablets, in the compartment (**A**).
3. If the programme has a prewash phase, put a small quantity of detergent on the inner part of the appliance door.
4. Close the lid. Make sure that the release button locks into position.

ⓘ

For information about the detergent dosage, refer to the manufacturer's instructions on the packaging of the product. Usually, 20 - 25 ml of gel detergent is adequate for washing a load with normal soil.

ⓘ

Do not fill the compartment (**A**) with more than 30 ml of gel detergent.

9.2 Setting and starting a programme

Auto Off function

This function saves energy by switching the appliance off when it is not operating.

The function comes into operation:
- When the programme is complete.
- After 5 minutes if a programme was not started.

Starting a programme

1. Press the on/off button to activate the appliance. Make sure that the appliance is in programme selection mode.
2. Close the appliance door.
3. Press **P** repeatedly until the indicator of the desired programme is on.

The display shows the programme duration.

4. Set applicable options if desired.
5. Press ▷ to start the programme.
   - The indicator of the running phase is on.
   - The programme duration counts down in minutes.

Starting a programme with delay start

1. Set a programme.
2. Press ⏲ repeatedly until the display shows the desired delay time (from 1 to 24 hours).
3. Press ▷ to begin the countdown.
   - The indicator ⏲ is on.
   - The remaining time counts down in hours. The final hour is displayed in minutes.

When the countdown is complete, the programme starts and the indicator of the running phase is on. The indicator ⏲ is off.

Opening the door while the appliance operates

Opening the door while a programme is running stops the appliance. It may affect the energy consumption and the programme duration. After closing the door, the appliance continues from the point of interruption.

ⓘ

If the door is opened for more than 30 seconds during the drying phase, the running programme ends. It does not happen if the door is opened by AirDry function.

ⓘ

Do not try to close the appliance door within 2 minutes after AirDry automatically opens it as this may cause damage to the appliance.
If, afterwards, the door is closed for at least 3 minutes, the running programme ends.

Cancelling the delay start while the countdown operates

When you cancel the delay start, you have to set a programme and options again.

Press and hold simultaneously ⏲ and ☑ until the appliance is in programme selection mode.

Cancelling the programme

Press and hold simultaneously ⏲ and ☑ until the appliance is in programme selection mode.
Make sure that there is detergent in the detergent dispenser before you start a new programme.

End of the programme

When the programme is complete, the Auto Off function switches the appliance off automatically.

All buttons are inactive except for the on/off button.

Close the water tap.

10. HINTS AND TIPS

10.1 General

Follow the hints below to ensure optimal cleaning and drying results in daily use and to protect the environment.

- Washing dishes in the dishwasher as instructed in the user manual usually consumes less water and energy than washing dishes by hand.
- Load the dishwasher to its full capacity to save water and energy. For best cleaning results, arrange items in the baskets as instructed in the user manual and do not overload the baskets.
- Do not pre-rinse dishes by hand. It increases the water and energy consumption. When needed, select a programme with a prewash phase.
- Remove larger residues of food from the dishes and empty cups and glasses before putting them inside the appliance.
- Make sure that items in the baskets do not touch or cover each other. Only then can the water completely reach and wash the dishes.
- Select a programme according to the type of load and the degree of soil. ECO offers the most efficient use of water and energy consumption.
- To prevent limescale buildup inside the appliance:
  - Refill the salt container whenever necessary.
  - Use the recommended dosage of the detergent and rinse aid.
  - Make sure that the current level of the water softener agrees with the hardness of the water supply.
  - Follow the instructions in "Care and cleaning" chapter.

10.2 Using salt, rinse aid and detergent

- Only use salt, rinse aid and detergent designed for dishwasher. Other products can cause damage to the appliance.
- In areas with hard and very hard water, we recommend to use basic dishwasher detergent (powder, gel, tablets containing no additional agents), rinse aid and salt separately for optimal cleaning and drying results.
- Detergent tablets do not fully dissolve with short programmes. To prevent detergent residues on the tableware, we recommend that you use tablets with long programmes.
- Always use the correct quantity of detergent. Insufficient dosage of detergent can result in poor cleaning results and hard-water filming or spotting on the items. Using too much detergent with soft or softened water results in detergent residues on the dishes. Adjust the amount of detergent based on the water hardness. Refer to the instructions on the detergent packaging.
- Always use the correct quantity of rinse aid. Insufficient dosage of rinse aid decreases the drying results. Using too much rinse aid results in bluish layers on the items.
- Make sure that the water softener level is correct. If the level is too high, the increased quantity of salt in the water might result in rust on cutlery.

10.3 What to do if you want to stop using multi-tablets

Before you start to use separately detergent, salt and rinse aid, complete the following steps:

1. Set the highest level of the water softener.
2. Make sure that the salt and rinse aid containers are full.
3. Start the shortest programme with a rinsing phase. Do not add detergent and do put dishes in the baskets.
4. When the programme is complete, adjust the water softener according to the water hardness in your area.
5. Adjust the released quantity of rinse aid.
6. Activate the rinse aid empty notification.

10.4 Loading the baskets

- Always use the whole space of the baskets.
- Use the appliance to wash dishwasher-safe items only.
- Do not wash in the appliance items made of wood, horn, aluminium, pewter and copper as they could crack, warp, get discoloured or pitted.
- Do not wash in the appliance items that can absorb water (sponges, household cloths).
- Put hollow items (cups, glasses and pans) with the opening facing downwards.
- Make sure that glass items do not touch each other.
- Put light items in the upper basket. Make sure that the items do not move freely.
- Put cutlery and small items in the cutlery basket.
- Move the upper basket upwards to accommodate large items in the lower basket.
- Make sure that the spray arms can move freely before you start a programme.

10.5 Before starting a programme

Before you start the selected programme, make sure that:

- The filters are clean and correctly installed.
- The cap of the salt container is tight.
- The spray arms are not clogged.
- There is enough salt and rinse aid (unless you use multi-tablets).
- The arrangement of the items in the baskets is correct.
- The programme is suitable to the type of load and the degree of soil.
- The correct quantity of detergent is used.

10.6 Unloading the baskets

1. Let the tableware cool down before you remove it from the appliance. Hot items can be easily damaged.
2. First remove items from the lower basket, then from the upper basket.

After the programme is completed, water can still remain on the inside surfaces of the appliance.

11. CARE AND CLEANING

WARNING!

Before maintenance, deactivate the appliance and disconnect the mains plug from the main socket.

Dirty filters and clogged spray arms decrease the washing results. Make a check regularly and, if necessary, clean them.

11.1 Internal cleaning

- Clean the appliance interior with a soft damp cloth.
- Do not use abrasive products, abrasive cleaning pads, sharp tools, strong chemicals, scourer or solvents.
- Wipe clean the door, including the rubber gasket, once a week.
- To maintain the performance of your appliance, use a cleaning product designed for dishwashers at least once every two months. Carefully follow the instructions on the packaging of the product.
- Use the automatic cleaning programme for optimal cleaning results.
- Using short-duration programmes regularly can cause grease and limescale buildup inside the appliance. Run long-duration programmes at least twice a month to prevent the buildup.

11.2 Removal of foreign objects

Check the filters and the sump after each use of the dishwasher. Foreign objects (e.g. pieces of glass, plastic, bones or toothpicks, etc) decrease the cleaning performance and can cause damage to the drain pump.

> ⚠ **CAUTION!**
>
> If unable to remove the foreign objects, contact an Authorised Service Centre.

1. Disassemble the filters system as instructed in this chapter.
2. Remove any foreign objects manually.
3. Reassemble the filters as instructed in this chapter.

11.3 External cleaning

- Clean the appliance with a moist soft cloth.
- Only use neutral detergents.
- Do not use abrasive products, abrasive cleaning pads or solvents.

11.4 Cleaning the filters

The filter system is made of 3 parts.

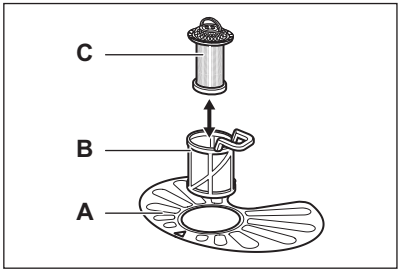

1. Turn the filter (**B**) counterclockwise and remove it.

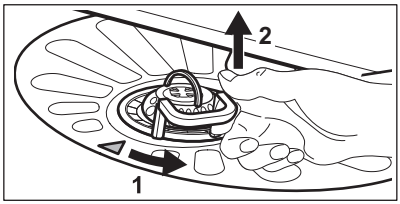

2. Remove the filter (**C**) out of filter (**B**).
3. Remove the flat filter (**A**).
4. Wash the filters.

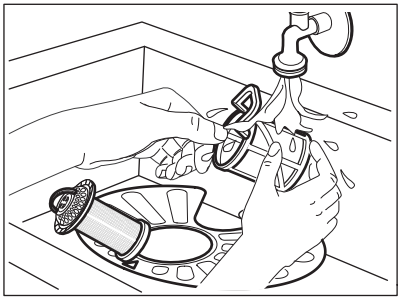

5. Make sure that there are no residues of food or soil in or around the edge of the sump.
6. Put back in place the flat filter (**A**). Make sure that it is correctly positioned under the 2 guides.



7. Reassemble the filters (**B**) and (**C**).
8. Put back the filter (**B**) in the flat filter (**A**). Turn it clockwise until it locks.

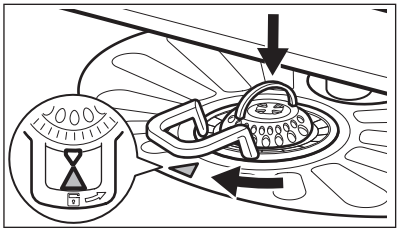

> ⚠ **CAUTION!**
>
> An incorrect position of the filters can cause bad washing results and damage to the appliance.

11.5 Cleaning the lower spray arm

1. To remove the lower spray arm, pull it upwards.

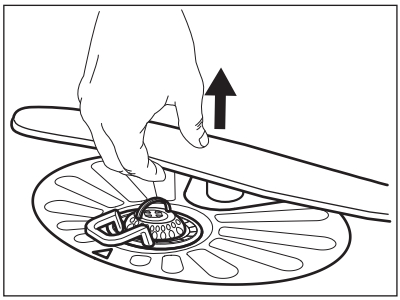

2. Wash the spray arm under running water. Use a thin pointed tool, e.g. a toothpick, to remove particles of soil from the holes. Run water through the holes to wash soil particles away from the inside.
3. To install the spray arm back, press it downwards.

11.6 Cleaning the upper spray arm

Do not remove the upper spray arm. If the openings in the spray arm are clogged, remove the remaining particles of soil with a thin pointed object, e.g. a toothpick.

12. TROUBLESHOOTING

⚠ WARNING!

Improper repair of the appliance may pose a danger to the safety of the user. Any repairs must be performed by qualified personnel.

The majority of problems that may occur can be solved without the need to contact an Authorised Service Centre.

Refer to the below table for information on possible problems.

With some problems, the display shows an alarm code.

Problem and alarm code	Possible cause and solution
You cannot activate the appliance.	• Make sure that the mains plug is connected to the mains socket. • Make sure that there is no damaged fuse in the fuse box.
The programme does not start.	• Make sure that the appliance door is closed. • Press the start button. • If the delay start is set, cancel the setting or wait for the end of the countdown. • The appliance recharges the resin inside the water softener. The duration of the procedure is approximately 5 minutes.
The appliance does not fill with water. The display shows **i10** or **i11**.	• Make sure that the water tap is open. • Make sure that the pressure of the water supply is not too low. For this information, contact your local water authority. • Make sure that the water tap is not clogged. • Make sure that the filter in the inlet hose is not clogged. • Make sure that the inlet hose has no kinks or bends.
The appliance does not drain the water. The display shows **i20**.	• Make sure that the sink spigot is not clogged. • Make sure that the interior filter system is not clogged. • Make sure that the drain hose has no kinks or bends.

Problem and alarm code	Possible cause and solution
The anti-flood device is on. The display shows **i30**.	• Close the water tap. • Make sure that the appliance is correctly installed. • Make sure the baskets are loaded as instructed in the user manual.
Malfunction of the water level detection sensor. The display shows **i41** - **i44**.	• Make sure that the filters are clean. • Switch the appliance off and on.
Malfunction of the wash pump or the drain pump. The display shows **i51** - **i59** or **i5A** - **i5F**.	• Switch the appliance off and on.
The temperature of the water inside the appliance is too high or malfunction of the temperature sensor occurred. The display shows **i61** or **i69**.	• Make sure that the temperature of the inlet water does not exceed 60°C. • Switch the appliance off and on.
Technical malfunction of the appliance. The display shows **iC0** or **iC3**.	• Switch the appliance off and on.
The level of water inside the appliance is too high. The display shows **iF1**.	• Switch the appliance off and on. • Make sure that the filters are clean. • Make sure that the outlet hose is installed at the right height above the floor. Refer to the installation instructions.
The appliance stops and starts more times during operation.	• It is normal. It provides optimal cleaning results and energy savings.
The programme lasts too long.	• If the delayed start is set, cancel the delay setting or wait for the end of the countdown.
The displayed programme duration is different than the duration in the consumption values table.	• The pressure and the temperature of the water, the variations of the mains supply, the options, the quantity of dishes and the degree of soil can change the programme duration.
The remaining time in the display increases and skips nearly to the end of programme time.	• This is not a defect. The appliance is working correctly.
Small leak from the appliance door.	• The appliance is not levelled. Loosen or tighten the adjustable feet (if applicable). • The appliance door is not centred on the tub. Adjust the rear foot (if applicable).
The appliance door is difficult to close.	• The appliance is not levelled. Loosen or tighten the adjustable feet (if applicable). • Parts of the tableware are protruding from the baskets.
The appliance door opens during the wash cycle.	• The AirDry function is activated. You can deactivate the function. Refer to **"Settings"**.
Rattling/knocking sounds from inside the appliance.	• The tableware is not properly arranged in the baskets. Refer to basket loading leaflet. • Make sure that the spray arms can rotate freely.

Problem and alarm code	Possible cause and solution
The appliance trips the circuit-breaker.	• The amperage is insufficient to supply simultaneously all the appliances in use. Check the socket amperage and the capacity of the meter or turn off one of the appliances in use. • Internal electrical fault of the appliance. Contact an Authorised Service Centre.

ⓘ

Refer to **"Before first use"**, **"Daily use"**, or **"Hints and tips"** for other possible causes.

Once you have checked the appliance, deactivate and activate the appliance. If the problem occurs again, contact an Authorised Service Centre.

For alarm codes not described in the table, contact an Authorised Service Centre.

⚠ **WARNING!**

We do not recommend using the appliance until the problem has been completely fixed. Unplug the appliance and do not plug it in again until you are certain that it operates correctly.

12.1 Dishwashing and drying results are not satisfactory

Problem	Possible cause and solution
Poor washing results.	• Refer to Daily use, Hints and tips and to the basket loading leaflet. • Use more intensive washing programme. • Activate the option ExtraPower to improve the washing results of a selected programme. • Clean spray arm jets and filters. Refer to Care and cleaning.
Poor drying results.	• Tableware was left for too long inside the closed appliance. Activate AirDry to set the automatic opening of the door and to improve the drying performance. • There is no rinse aid or the dosage is not sufficient. Fill the rinse aid dispenser or set the dosage to a higher level. • The quality of the rinse aid can be the cause. • Always use rinse aid, even with multi-tablets. • Plastic items may need to be towel dried. • The programme does not have the drying phase. Refer to the programme table.
Whitish streaks or bluish layers on glasses and dishes.	• The released quantity of rinse aid is too high. Adjust the dosage to a lower level. • The quantity of detergent is too high.
Stains and dry water drops on glasses and dishes.	• The released quantity of rinse aid is not sufficient. Adjust the dosage to a higher level. • The quality of the rinse aid can be the cause.
The interior of the appliance is wet.	• This is not a defect of the appliance. Humidity condensates on the appliance walls.
Unusual foam during washing.	• Use the detergent designed specifically for dishwashers. • Use a detergent from a different manufacturer. • Do not pre-rinse dishes under running water.

Problem	Possible cause and solution
Traces of rust on cutlery.	• There is too much salt in the water used for washing. Refer to the water softener setting. • Silver and stainless steel cutlery were placed together. Do not place silver and stainless steel items close together.
Residues of detergent in the dispenser at the end of the programme.	• The detergent tablet was stuck in the dispenser and was not washed away by water. • Water cannot wash away the detergent from the dispenser. Make sure that the spray arms are not blocked or clogged. • Make sure that items in the baskets do not impede the lid of the detergent dispenser from opening.
Odours inside the appliance.	• Refer to the Care and cleaning chapter. • Start the programme with a descaler or a cleaning product designed for dishwashers.
Limescale deposits on the tableware, on the tub and on the inside of the door.	• The level of salt is low, check the refill indicator. • The cap of the salt container is loose. • Your tap water is hard. Refer to the water softener setting. • Use salt and set regeneration of the water softener even when multi-functional tablets are used. Refer to the water softener setting. • Start the programme with a descaler designed for dishwashers. • If limescale deposits persist, clean the appliance with the suitable detergents. • Try a different detergent. • Contact the detergent manufacturer.
Dull, discoloured or chipped tableware.	• Make sure that only dishwasher-safe items are washed in the appliance. • Load and unload the basket carefully. Refer to the basket loading leaflet. • Place delicate items in the upper basket. • Activate the option GlassCare to ensure special care for glassware and delicate items.

Refer to Before first use, Daily use, or Hints and tips for other possible causes.

13. TECHNICAL DATA

Dimensions	Width / height / depth (mm)	598 / 850 / 622
Electrical connection **1)**	Voltage (V)	220 - 240
	Frequency (Hz)	50
Water supply pressure	Min. / max. MPa (bar)	0.05 (0.5) / 1 (10)
Water supply	Cold water or hot water (°C) **2)**	min. 5 - max. 60
Capacity	Place settings	13

1) Refer to the rating plate for other values.

2) If the hot water comes from alternative source of energy (e.g. solar panels), use the hot water supply to decrease energy consumption.

13.1 Link to the EU EPREL database

The QR code on the energy label supplied with the appliance provides a web link to the registration of this appliance in the EU EPREL database. Keep the energy label for reference together with the user manual and all other documents provided with this appliance.

It is also possible to find information related to the performance of the product in the EU EPREL database using the link https://eprel.ec.europa.eu and the model name and product number that you can find on the rating plate of the appliance. Refer to the "Product description" chapter.

14. ENVIRONMENTAL CONCERNS

Recycle materials with the symbol . Put the packaging in relevant containers to recycle it. Help protect the environment and human health by recycling waste of electrical and electronic appliances. Do not dispose of appliances marked with the symbol with the household waste. Return the product to your local recycling facility or contact your municipal office.

electrolux.com

156815362-A-152025

