User Guide

Quality, Design and Innovation

home.liebherr.com/fridge-manuals

LIEBHERR

Contents

1 Appliance at a glance..... 3
1.1 Scope of delivery..... 3
1.2 Overview of the appliance and equipment..... 3
1.3 Appliance range of use..... 4
1.4 Conformity..... 4
1.5 SVHC substances according to REACH regulation. 4
1.6 EPREL database..... 4

2 General safety instructions..... 4

3 Putting into operation..... 5
3.1 Switching on appliance..... 5
3.2 Inserting the components..... 6

4 Foods management..... 6
4.1 Storing food..... 6
4.2 Storage times..... 7

5 Saving energy..... 8

6 Controls..... 8
6.1 Controls and displays..... 8
6.1.1 Status display..... 8
6.1.2 Navigation..... 8
6.1.3 Display symbols..... 9
6.2 Control concept..... 9
6.2.1 Activating/deactivating the function..... 9
6.2.2 Selecting function value..... 9
6.2.3 Activating/deactivating settings..... 9
6.2.4 Selecting the setting value..... 9
6.2.5 Go to the Customer menu..... 10
6.3 Functions..... 10
Turn off appliance..... 10
WiFi..... 10
Temperature*..... 11
Temperature unit..... 11
BioFresh B-Value*..... 11
D-Value..... 12
SuperCool*..... 12
VarioTemp..... 12
SuperFrost..... 12
PartyMode..... 12
HolidayMode*..... 12
SabbathMode*..... 13
EnergySaver..... 13
HydroBreeze*..... 13
IceMaker / MaxIce*..... 14
Ice cubes*..... 15
TubeClean*..... 15
CleaningMode..... 15
Display brightness..... 15
Door alarm..... 15
Entry lock..... 15
Language..... 15
Info..... 16
Reminder..... 16
Reset..... 16
6.4 Fault messages..... 16
6.4.1 Warnings..... 16
6.4.2 Message..... 16
6.4.3 DemoMode..... 16

7 Features..... 17
7.1 Door rack..... 17
7.2 Shelves..... 17
7.3 Dividing shelf..... 17
7.4 VarioSafe*..... 17
7.5 Adjustable bottle shelf..... 18
7.6 Drawers..... 18
7.7 Fruit & Vegetable safe cover..... 19
7.8 Adjusting the moisture levels..... 20
7.9 HydroBreeze*..... 20
7.10 Glass shelves..... 21
7.11 IceMaker*..... 21
7.12 VarioSpace..... 21
7.13 Accessories..... 22

8 Maintenance..... 24
8.1 FreshAir carbon filter..... 24
8.2 Disassembling / assembling pull-out systems..... 24
8.3 Defrosting the appliance..... 25
8.4 Cleaning the appliance..... 25

9 Customer help..... 26
9.1 Technical specifications..... 26
9.2 Operating noises..... 27
9.3 Technical fault..... 27
9.4 Customer Services..... 28
9.5 Model plate..... 29

10 Shutting down..... 29

11 Disposal..... 29
11.1 Preparing appliance for disposal..... 29
11.2 Disposing of the appliance in an environmentally friendly manner..... 29

The manufacturer is continually working on the further development of all types and models. Please be aware that we reserve the right to make changes to the shape, equipment and technology.

Symbol	Explanation
	**Read instructions** Please read the information in these instructions carefully to understand all of the benefits of your new appliance.

Symbol	Explanation
	Full instructions on the internet You can find detailed instructions on the internet using the QR code on the front of these instruction or by entering the service number at **home.liebherr.com/fridge-manuals**. The service number can be found on the serial tag: 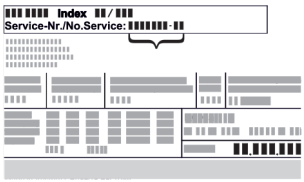 *Fig.* Example illustration
	Check appliance Check all parts for transport damage. If you have any complaints, please contact your agent or customer service.
	Differences These instructions apply to a range of models, so differences are possible. Sections that apply to certain models only are marked with an asterisk (*).
	Instructions and results Instructions are marked with a ▶. Results are marked with a ▷.
	Videos Videos about the appliances are available on the YouTube channels of Liebherr-Hausgeräte.

These operating instructions apply to:

CBN (sd)(sg)(b)(c)(d)(h)	57../ 76..
SBN (sd)(bs)(d)(h)	52..

Note
If your appliance has an N in its appliance designation, it is a NoFrost appliance.

1 Appliance at a glance

1.1 Scope of delivery

Check all parts for damage during transport. If you have any complaints, please contact your retailer or Customer Services (see 9.4 Customer Services) .

Your new appliance comes with the following parts:

- Standalone appliance
- Features (depending on the model)
- Installation materials (depending on the model)
- “Quick Start Guide”
- “Installation Guide”
- Service Brochure

1.2 Overview of the appliance and equipment

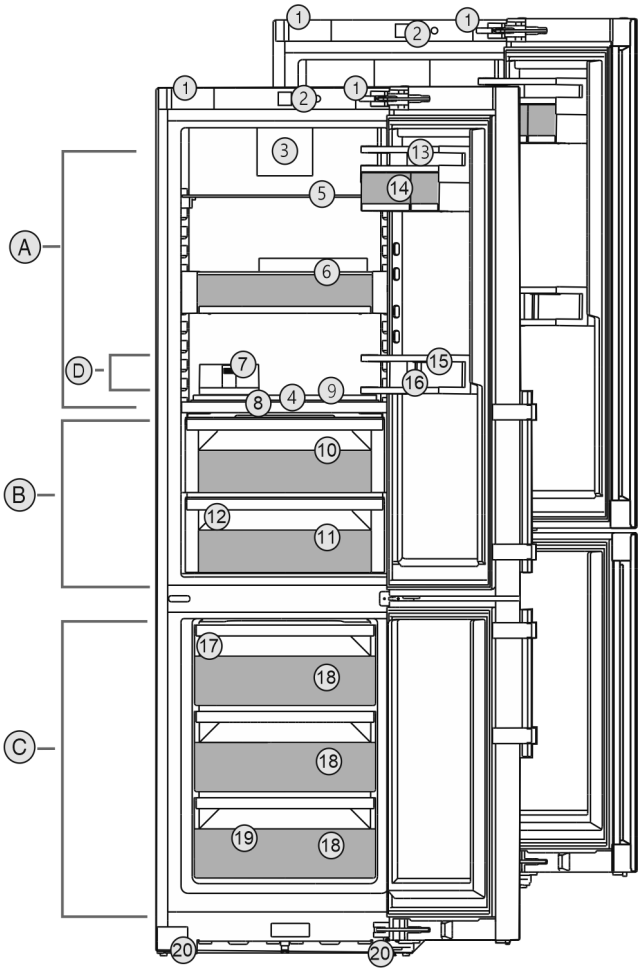

Fig. 1 Example illustration

Temperature range

(A) Fridge compartment
(B) BioFresh
(C) Freezer compartment
(D) Coldest zone

Equipment

(1) Transport handles
(2) Controls
(3) Fan with FreshAir activated charcoal filter
(4) HydroBreeze*
(5) Separable storage shelf
(6) VarioSafe*
(7) Butter dish*
(8) Lid for Fruit & Vegetable-Safe
(9) Adjustable bottle shelf
(10) Fruit & Vegetable-Safe
(11) Meat & Dairy-Safe
(12) Outlet
(13) Door shelf
(14) VarioBox
(15) Bottle rack*
(16) Bottle holder*
(17) IceMaker*
(18) Freezer compartment
(19) Serial tag
(20) Adjustable feet and the front, transport castors at the rear, carrying handle at the top (rear) and at the bottom (front)

Note
▶ Shelves, drawers and baskets are arranged for optimum energy efficiency when the appliance is delivered. Changing how the shelves, for example, are inserted in the fridge compartment does not have any impact on energy consumption.

1.3 Appliance range of use

Intended use

The appliance is only suitable for cooling food products in a domestic or household-like environment. This includes, for example, use:

- in staff kitchens, bed and breakfast establishments,
- by guests in country houses, hotels, motels and other accommodation,
- for catering and similar services in the wholesale trade.

The appliance is not suitable as a built-in unit.

All other types of use are not permitted.

Foreseeable misuse

The following applications are expressly forbidden:

- Storing and refrigerating medicines, blood plasma, laboratory preparations or similar substances and products based on the Medical Device Directive 2007/47/EC
- Use in areas at risk of explosions

Misusing the appliance may lead to damage to the goods stored or they may spoil.

Climate classifications

Depending on the climate classification the appliance is designed to operate in restricted ambient temperatures. The climate classification applying to your appliance is printed on the rating plate.

Note

▶ Keep to the specified ambient temperatures in order to guarantee that the appliance works properly.

Climate classification	for ambient temperatures of
SN	10 °C to 32 °C
N	16 °C to 32 °C
ST	16 °C to 38 °C
T	16 °C to 43 °C
SN-ST	10 °C to 38 °C
SN-T	10 °C to 43 °C

1.4 Conformity

The refrigerant circuit has been tested for leaks. The appliance complies with the applicable safety regulations and with the corresponding directives.

The full text of the EU Declaration of Conformity is available on the following website: www.Liebherr.com

The BioFresh compartment meets the requirements of a cold storage compartment as set out in DIN EN 62552:2020.

1.5 SVHC substances according to REACH regulation

You can check whether your appliance contains SVHC substances according to REACH regulation at the following link: home.liebherr.com/de/deu/de/liebherr-erleben/nachhaltigkeit/umwelt/scip/scip.html

1.6 EPREL database

Details about energy labelling and ecodesign requirements will be available on the European product database (EPREL) from 1st March 2021. You can access the product database at the following link: https://eprel.ec.europa.eu/ You will be asked to enter the model ID. You can find the model ID on the nameplate.

2 General safety instructions

Please keep these operating instructions in a safe place so you can refer back to them at any time.

If you pass the appliance on, please hand these operating instructions to the next user.

Read these operating instructions carefully before use to ensure safe and correct use of the appliance. Follow the instructions, safety instructions and warning messages included at all times. They are important for ensuring you can operate and install the appliance safely and without any problems.

Danger for the user:

- This device can be used by children and people with impaired physical, sensory or mental abilities or with a lack of experience and knowledge provided that they are supervised or have received instruction in the safe use of this device, and about the resulting hazards. Children must not play with this appliance. Cleaning and user maintenance work must not be carried out by children without adult supervision. Children aged between 3 and 8 are allowed to load and unload the appliance. Children below the age of 3 must be kept away from the appliance unless they are under continuous adult supervision.
- The socket must be easily accessible so that the appliance can be disconnected quickly from the electricity in an emergency. It must not be located in the area behind the appliance.
- When disconnecting the appliance from the supply, always take hold of the plug. Do not pull the cable.
- In the event of a fault pull out the mains plug or deactivate the fuse.

- Do not damage the mains power cable. Do not operate the appliance with a defective mains power cable.
- Only customer service or other specially trained staff may repair or perform other operations on the appliance.
- Only assemble, connect and dispose of the appliance according to the instructions.
- The manufacturer is not liable for damage caused by a faulty fixed water connection.*

Fire hazard:

- The coolant used (information on the model plate) is ecofriendly but also flammable. Any leaking coolant may ignite.
  - Do not damage the refrigerant circuit pipes.
  - Do not handle ignition sources inside the appliance.
  - Do not use electrical appliances inside the appliance (e.g. steam cleaners, heaters, ice cream makers, etc.).
  - If the refrigerant leaks: remove any naked flames or ignition sources from the vicinity of the leakage point. Properly air the room. Inform customer services.
- Do not store explosives or sprays using combustible propellants such as butane, propane, pentane, etc. in the appliance. To identify these spray cans, look for the list of contents printed on the can, or a flame symbol. Gases possibly escaping may ignite due to electrical components.
- Keep burning candles, lamps and other items with naked flames away from the appliance so that they do not set the appliance on fire.
- Please be sure to store alcoholic drinks or other packaging containing alcohol in tightly closed containers. Any alcohol that leaks out may be ignited by electrical components.

Danger of tipping and falling:

- Do not misuse the plinth, drawers, doors etc. as a step or for support. This applies particularly to children.

Danger of food poisoning:

- Do not consume food which has been stored too long.

Danger of frostbite, numbness and pain:

- Avoid prolonged skin contact with cold surfaces or refrigerated/frozen goods or take protective measures, e.g wear gloves.

Danger of injury and damage:

- Hot steam can lead to injury. Do not use electrical heating or steam cleaning equipment, open flames or defrosting sprays to defrost.
- Do not use sharp implements to remove the ice.

Risk of crushing:

- Do not hold the hinge when opening and closing the door. Fingers may get caught.

Symbols on the appliance:



This symbol may be located on the compressor. It relates to the oil in the compressor and makes reference to the risk that: Swallowing or inhaling can be fatal. This advice is only relevant to recycling. There is no danger in normal operation.



This symbol is located on the compressor and indicates the danger of flammable materials. Do not remove the sticker.



This or a similar sticker may be located on the rear of the appliance. This sticker indicates that there are vacuum insulation panels (VIP) or perlite panels in the door and/or housing. This advice is only relevant to recycling. Do not remove the sticker.

Please note the warning messages and other specific advice in the other chapters:

	DANGER	indicates an immediately hazardous situation which will lead to death or serious injuries if it is not avoided.
	WARNING	indicates a hazardous situation which may lead to death or serious injuries if it is not avoided.
	CAUTION	indicates a hazardous situation which may lead to minor or moderate injuries if it is not avoided.
	NOTICE	indicates a hazardous situation which may lead to damage to property if it is not avoided.
	Note	indicates useful instructions and tips.

3 Putting into operation

3.1 Switching on appliance

Ensure that the following conditions are met:

- ❑ Appliance is set up and connected according to installation instructions.
- ❑ All adhesive strips, adhesive and protective films as well as transport safety devices in and on the appliance are removed.
- ❑ All marketing leaflets are removed from the drawers.

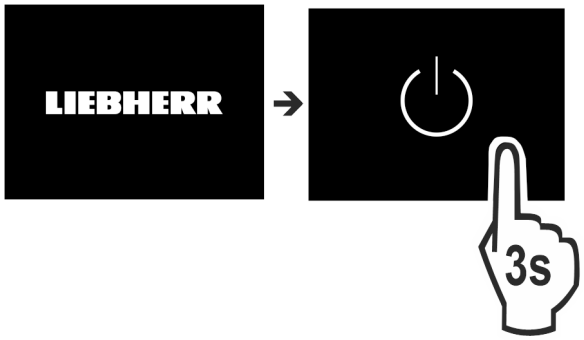

Fig. 2

▶ Switch on the appliance using the display.

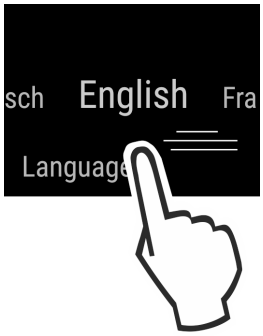

Fig. 3

▶ Select the language.
▷ The status display appears.

The appliance starts in DemoMode:

If the appliance starts in DemoMode, you can deactivate DemoMode within the next 5 minutes.

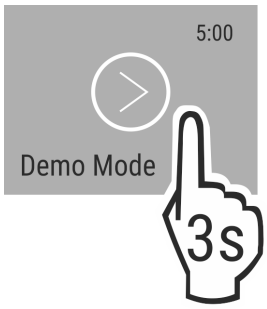

Fig. 4

▶ Press DemoMode for 3 seconds.
▷ DemoMode is deactivated.

Note
The manufacturer recommends:
▶ Place the food inside: Wait for around 6 hours until the set temperature is reached.
▶ **Store frozen foods** at -18 °C or colder.

3.2 Inserting the components

Note
Accessories can be purchased from the Liebherr-Hausgeräte store at home.liebherr.com/shop/de/deu/zubehor.html.

▶ Insert the supplied components to make the most of your appliance.

4 Foods management

4.1 Storing food

WARNING
Risk of fire
▶ Do not use any electrical appliances in the food area of the appliance unless recommended by the manufacturer.

Note
The energy consumption increases and the cooling power goes down if ventilation is not sufficient.
▶ Always keep air slots clear.

When storing food, always observe the following:
❑ Air vents on the inside rear wall are unobstructed.
❑ Air vents on the fan are unobstructed.*
❑ Food is in sealed packaging.
❑ Foods that easily absorb or give off smell or taste are stored in sealed containers or covered.
❑ Raw meat and fish are in clean, sealed containers to prevent them coming into contact with or dripping onto other foods.
❑ Liquids are in sealed containers.
❑ Foods are not stored too closely together, as the air needs to circulate.

Note
Failure to follow these guidelines can lead to food perishing.

4.1.1 Fridge section*

The natural air circulation creates a range of temperatures.

Arrange your food as follows:
▶ In the top section and in the door: butter and cheese, preserves and tubes.
▶ In the coldest zone *Fig. 1 (D)*: easily perishable food such as prepared meals.*

4.1.2 BioFresh

BioFresh helps certain fresh foods stay fresh for longer compared to conventional cooling methods.

In the case of foods with a minimum shelf life, the date indicated on the packaging still applies.

Note
If the temperatures drop below 0 °C foods may freeze to each other.
▶ Store cold-sensitive vegetables such as cucumbers, aubergines, courgettes, and cold-sensitive tropical fruit, in the fridge compartment.

Fruit & Vegetable-Safe

This provides a fresh storage climate with the lid closed. A moist climate is suitable for storing loose foods with a high moisture content (e.g. salad, vegetables, fruit).

The air moisture in the compartment depends on the moisture content of the items being stored and the number of times the door is opened. You can adjust the air moisture.

Arrange your food as follows:
▶ Store your loose fruit and vegetables.
▶ Excessive air moisture: Regulate the air humidity (see 7.8 Adjusting the moisture levels) .

*** Depending on model and options**

Meat & Dairy-Safe

Here a relatively dry storage climate is set. A dry climate is great for dry or packaged foods (e.g. dairy products, meat, fish, sausage).

Arrange your food as follows:

▶ Place the dry or packaged foods inside.

4.1.3 Freezer compartment

This provides a dry, frosty storage climate at -18 °C. A frosty climate is great for storing frozen food and frozen goods for several months, making ice cubes and freezing fresh food.

Freezing food

You can freeze as many kilograms of fresh food within 24 hours as indicated on the nameplate (see 9.5 Model plate) under "freezing capacity ... kg/24h".

So that the food is rapidly frozen through to the core, keep to the following quantities per pack:

- Fruit, vegetables up to 1 kg
- Meat up to 2.5 kg

Before freezing goods, please make sure of the following:

❑ SuperFrost is activated (see 6.3 Functions) when the amount of food to freeze exceeds approx. 2 kg.
❑ With a small amount of frozen goods: SuperFrost is activated approx. 6 hours prior.
❑ With the maximum amount of frozen goods: SuperFrost is activated approx. 24 hours prior.

Arrange your food as follows:

CAUTION
Risk of injury from glass fragments!
Drink bottles and cans may explode if frozen. This applies particularly to carbonated drinks.
▶ Only freeze drink bottles and cans when using the *bottle timer* function.

With a small amount of frozen goods:
▶ Place packaged groceries in the top drawer.
▶ If possible, place groceries at the back of the drawer near the rear wall.
With a maximum amount of frozen goods:
▶ Distribute packaged groceries across all drawers, but do not place any groceries in the bottom drawer.
▶ If possible, place groceries at the back of the drawer near the rear wall.
With a maximum amount of frozen goods:
▶ Once SuperFrost deactivates automatically, place food into the drawer.

Defrost the food

- In the fridge
- In the microwave
- In the stove/oven
- At room temperature

WARNING
Risk of food poisoning!
▶ Do not re-freeze thawed food.

▶ Only take out the food you need at the time.
▶ Cook defrosted food as soon as possible.

4.2 Storage times

Refer to the specified storage times as a guide.

In the case of foods with a minimum shelf life, the date indicated on the packaging still applies.

4.2.1 Fridge section*

Always follow the best-before date stated on the packaging.

4.2.2 BioFresh

Recommended storage periods in the Meat & Dairy-Safe*		
Butter	at 1 °C	up to 90 days
Hard cheese	at 1 °C	up to 110 days
Milk	at 1 °C	up to 12 days
Sausage, cold meats	at 1 °C	up to 8 days
Poultry	at 1 °C	up to 6 days
Pork	at 1 °C	up to 6 days
Beef	at 1 °C	up to 6 days
Game	at 1 °C	up to 6 days

Note

▶ Remember that high-protein foods perish quicker; shellfish and crustaceans do not last as long as fish, and fish does not last as long as meat.

Recommended storage periods in the Fruit & Vegetable-Safe*		
Vegetables, salads		
Artichokes	at 1 °C	up to 14 days
Celery	at 1 °C	up to 28 days
Cauliflower	at 1 °C	up to 21 days
Broccoli	at 1 °C	up to 13 days
Chicory	at 1 °C	up to 27 days
Lettuce	at 1 °C	up to 19 days
Peas	at 1 °C	up to 14 days
Kale	at 1 °C	up to 14 days
Carrots	at 1 °C	up to 80 days
Garlic	at 1 °C	up to 160 days
Turnip	at 1 °C	up to 14 days
Lettuce	at 1 °C	up to 13 days
Herbs	at 1 °C	up to 13 days
Leeks	at 1 °C	up to 29 days
Mushrooms	at 1 °C	up to 7 days
Radishes	at 1 °C	up to 10 days
Brussels sprouts	at 1 °C	up to 20 days
Asparagus	at 1 °C	up to 18 days
Spinach	at 1 °C	up to 13 days
Savoy	at 1 °C	up to 20 days
Fruit		
Apricots	at 1 °C	up to 13 days
Apples	at 1 °C	up to 80 days
Pears	at 1 °C	up to 55 days
Blackberries	at 1 °C	up to 3 days

Recommended storage periods in the Fruit & Vegetable-Safe*		
Dates	at 1 °C	up to 180 days
Strawberries	at 1 °C	up to 7 days
Figs	at 1 °C	up to 7 days
Blueberries	at 1 °C	up to 9 days
Raspberries	at 1 °C	up to 3 days
Currants	at 1 °C	up to 7 days
Sweet cherries	at 1 °C	up to 14 days
Kiwis	at 1 °C	up to 80 days
Peaches	at 1 °C	up to 13 days
Plums	at 1 °C	up to 20 days
Cranberries	at 1 °C	up to 60 days
Rhubarb	at 1 °C	up to 13 days
Gooseberries	at 1 °C	up to 13 days
Grapes	at 1 °C	up to 29 days

4.2.3 Freezer compartment

Recommended storage period for various types of food		
Ice cream	at -18 °C	2 to 6 months
Sausages, ham	at -18 °C	2 to 3 months
Bread, baked goods	at -18 °C	2 to 6 months
Game, pork	at -18 °C	6 to 9 months
Fatty fish	at -18 °C	2 to 6 months
Lean fish	at -18 °C	6 to 8 months
Cheese	at -18 °C	2 to 6 months
Poultry, beef	at -18 °C	6 to 12 months
Vegetables, fruit	at -18 °C	6 to 12 months

5 Saving energy

- Pay attention to good ventilation. Do not cover ventilation holes or grids.
- Always keep the fan air slits clear.
- Do not install the appliance in direct sunlight, next to an oven, radiator or similar.
- Energy consumption depends on the installation conditions, e.g. the ambient temperature (see 1.3 Appliance range of use) . A warmer ambient temperature can increase the energy consumption.
- Open the appliance for as short a time as possible.
- The lower the temperature is set the higher the energy consumption.
- Sort your food: home.liebherr.com/food.
- Keep all food properly packed and covered. This prevents frost from forming.
- Only take food out for as long as necessary so that it doesn't warm up too much.
- Inserting warm food: allow to cool down to room temperature first.
- Thaw frozen food in the refrigerator.*
- If you intend to be on holiday for a long time empty the refrigerator and switch it off.*
- For longer periods of absence, use HolidayMode (see HolidayMode*) .*

6 Controls

6.1 Controls and displays

The display gives you a quick overview of the temperature setting and the status of functions and settings. Select or adjust functions by activating/deactivating or selecting a value.

6.1.1 Status display

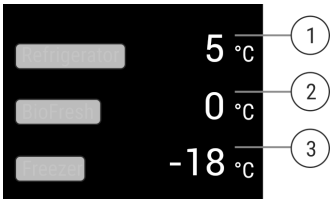

Fig. 5

(1) Temperature display of the fridge section*
(2) Temperature display BioFresh*
(3) Freezer compartment temperature display*

The Status display shows the set temperatures and is the home display. From there, you can navigate to the options and settings.

6.1.2 Navigation

Navigate in the menu to access the individual functions. An audible signal sounds after confirming a function or setting. If no selection is made after 10 seconds, the display switches to the Status display.

Navigation	Description
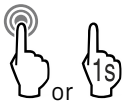	**Press briefly** Activate/deactivate function. Confirm selection. Open submenu.
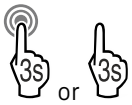	**Long press (3 seconds)** Activate/deactivate function. Increasing/decreasing bar appears in the display. Confirm selection. Reset appliance/values. Switch appliance on/off.
	**Swipe** Navigate in the menu. Search for values.
	**Briefly press "Back" symbol** Display goes back one level.
No action for 10 seconds	Display switches to the Status display.

*** Depending on model and options**

6.1.3 Display symbols

Display symbols provide information on the current appliance status:

Symbol	Appliance status
	**Standby** The appliance or temperature zone is switched off.
 	**Flashing number** Appliance is working. Temperature flashes until the set temperature is reached.
 	**Flashing symbol** Appliance is working. Setting is made.

6.2 Control concept

6.2.1 Activating/deactivating the function

You can activate/deactivate the following functions:

Symbol	Function
 *	SuperCool[x]*
	SuperFrost[x]
 *	IceMaker and MaxIce[x]*
	PartyMode[x]
 *	HolidayMode*
	EnergySaver
 *	HydroBreeze*
	VarioTemp

[x] When function is on, the appliance works harder. This means appliance noise when operating may be louder for a short while, and more energy will be consumed.

▶ Swipe left in the display until the function appears.
▶ Confirm selected function with a short tap.
▷ You hear the confirmation tone.
▷ Status appears in the menu.
▷ Function is on/off.

6.2.2 Selecting function value

With the following functions you can set a value in the submenu:

Symbol	Function
 *	**Cool:*** Setting the temperature* Turn on/off the temperature zone*
	**Freeze:** Setting the temperature Turn on/off the temperature zone
	**VarioTemp:** Setting the temperature Turn on/off the temperature zone

▶ Swipe left in the display until the function appears.
▶ Confirm selected function with a short tap.
▶ Select the setting value by swiping the display.
▶ Press briefly to confirm the selected value.

6.2.3 Activating/deactivating settings

You can activate/deactivate the following settings:

Symbol	Setting
	WiFi[1]
	Entry lock[2]
	SabbathMode[2]
	Cleaning Mode[2]
	Reminders[1]
	Reset[2]
	Switch off [2]

▶ Swipe left in the display until Settings  appears.
▶ Tap to confirm settings.
▶ Swipe until you see the setting you want.

[1] **Activate setting (shortpress)**
▶ Tap briefly to confirm.
▷ You hear the confirmation tone.
▷ Status appears in the menu.
▷ Setting is on / off.

[2] **Activate setting (longpress)**
▶ Press the selection for 3 seconds to confirm.
▷ You hear the confirmation tone.
▷ Status appears in the menu.
▷ Display changes.

6.2.4 Selecting the setting value

With the following settings you can set a value in the submenu:

Symbol	Settings
	Brightness

Symbol	Settings
	Door alarm
°C/°F	Temp. unit
	Language

▶ Swipe left in the display until Settings appears.
▶ Tap to confirm settings.
▶ Swipe until you see the setting you want.
▶ Tap briefly to confirm.
▶ Select the desired setting value by swiping the display.
▶ Tap briefly to confirm.
▷ You hear the confirmation tone.
▷ Status appears briefly in the submenu.
▷ Display switches back to the menu.

6.2.5 Go to the Customer menu

You can see the following settings in the Customer menu:

Symbol	Function
B5*	BioFresh B-Value [1]*
D1	D-Value [1]
*	TubeClean[2]*
5 *	Ice cubes[1]*
Software	Software

▶ Swipe left in the display until the settings appear.
▶ Tap settings.
▷ The submenu appears.
▶ Swipe left in the display until the appliance information appears.
▶ Press for 3 seconds.
▷ The input menu for a numerical code appears.
▶ Enter the numerical code 151.
▷ The customer menu appears.
▶ Swipe left in the display until the desired setting appears.

[1] **Select the value**
▶ Confirm with a short tap.
▷ You hear the confirmation tone.
▷ Status appears briefly in the display.
▷ Display switches back to the menu.

[2] **Activate the setting**
▶ To confirm, press the display for 3 seconds.
▷ You hear the confirmation tone.
▷ Status appears on the display.
▷ The symbol flashes as long as the appliance is working.

6.3 Functions

Turn off appliance

This setting turns off the whole appliance.

Switching off the entire appliance

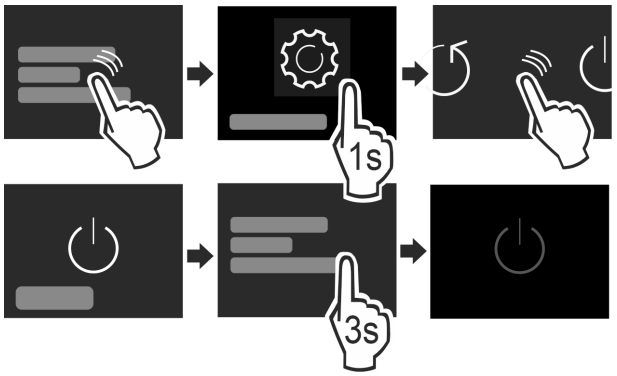

Fig. 6

▶ Turning off the IceMaker .*
▶ Activating/deactivating (see 6.2 Control concept) .
▷ Off: Display goes black.

WiFi

Use this function to connect your appliance to the WiFi. You can then operate it via the SmartDevice app on a mobile device. You can also use this function to disconnect or reset the WiFi connection. To connect your appliance to the WiFi, you need the SmartDeviceBox. For more information about the SmartDeviceBox and how to use the SmartDevice app:

Note
You cannot use the SmartDeviceBox in the following countries: Belarus, Kazakhstan, Russia. The SmartDevice function is not available.

Establishing a WiFi connection

Make sure that the following requirements are fulfilled:
❑ You have purchased and inserted a SmartDeviceBox.
❑ You have installed the SmartDevice app (see apps.home.liebherr.com).
❑ Registration in the SmartDevice app is completed.

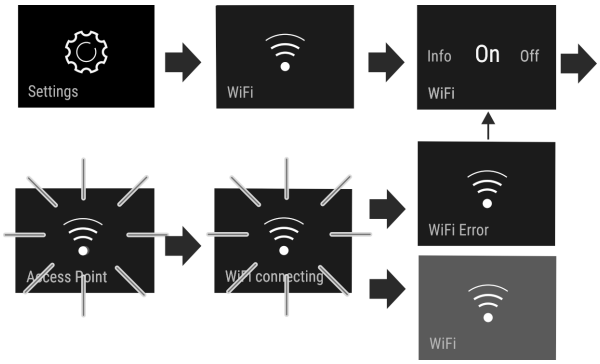

Fig. 7

▶ Activate the setting. (see 6.2 Control concept)
▷ Connection is established: Connecting appears. The symbol flashes.
▷ Connection is established: WiFi appears, the display turns blue.
▷ Connection failed: WiFi Error appears.

Disconnecting from the WiFi

▶ Deactivate the setting. (see 6.2 Control concept)

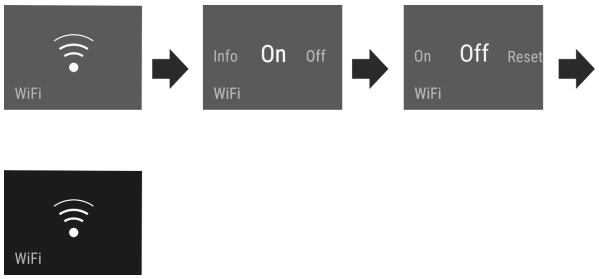

Fig. 8

▷ There is no connection: Symbol  is permanently visible.

Resetting the WiFi connection

▶ Reset settings. (see 6.2 Control concept)

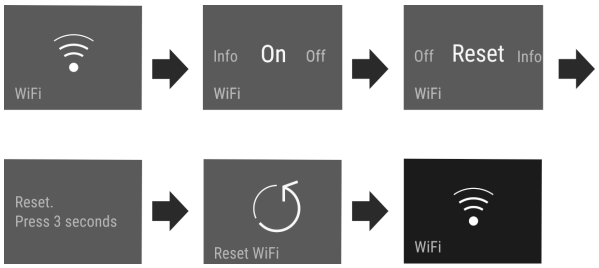

Fig. 9

▷ The connection and other settings are reset to the factory settings.

5 ℃ Temperature*

The temperature depends on the following factors:

- The amount of times the door is opened
- How long the door is open for
- The room temperature of the installation site
- The type, temperature and amount of food

Temperature zone*	Recommended setting*
5 ℃ Fridge section*	5 °C*
-18 ℃ Freezer compartment*	-18 °C*
0 ℃ BioFresh*	(see BioFresh B-Value*) *

Setting the temperature in the fridge compartment*

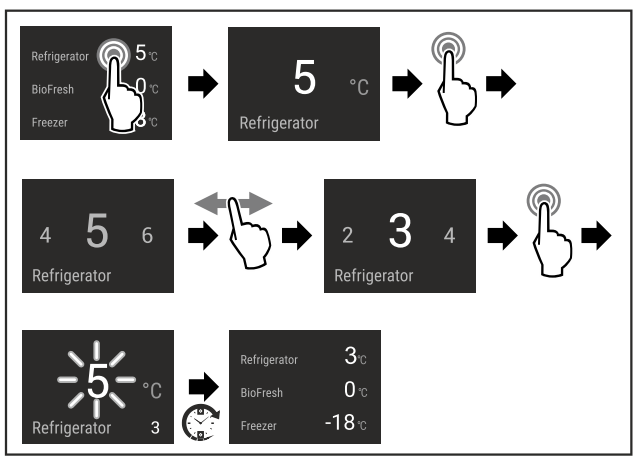

Fig. 10

▶ Complete the steps.

▷ Temperature is set.

Setting the temperature in the freezer compartment*

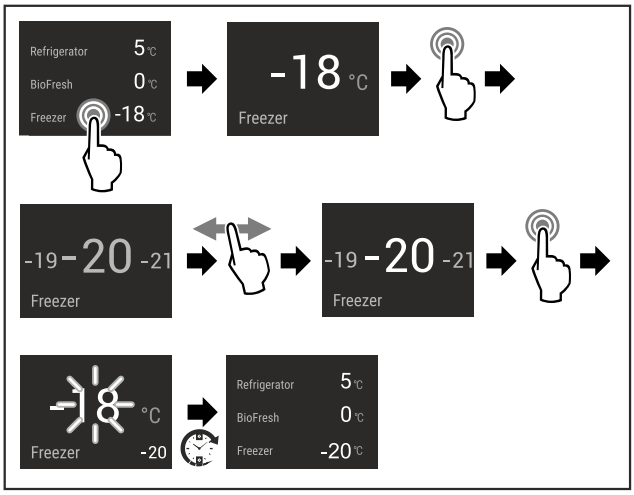

Fig. 11

▶ Complete the steps.

▷ Temperature is set.

Switching off a temperature zone*

You can switch off the fridge compartment separately.*

If you switch off the freezer compartment, all temperature zones are switched off.*

▶ Deactivate IceMaker. *

▶ Set the value. (see 6.2 Control concept) .

▷  appears.

Setting the temperature in the BioFresh*

You can set the temperature using the **BioFresh B-Value** in the customer menu. (see BioFresh B-Value*)

°C/°F Temperature unit

This setting enables you to switch between Celsius and Fahrenheit as the temperature unit.

Selecting the setting value

▶ Set the value (see 6.2 Control concept) .

B5 BioFresh B-Value*

When delivered, the temperature in the BioFresh compartment is set to **B5**. The status indicator on the display shows the appropriate target temperature in the BioFresh.

You can change this value slightly if a higher or lower ambient temperature makes it necessary. When setting the value, note:

Value	Description
B1	Lowest temperature
B1-B4	The temperature can drop to under 0 °C, so food can freeze easily.
B5	Default temperature
B9	Highest temperature

BioFresh B-Value

Choose the setting

▶ Set the size in the Customer menu (see 6.2 Control concept) .

D1 D-Value

The *D-Value* is preset for your appliance and may not be changed.*

SuperCool*

This function selects the lowest cooling temperature. This gives you colder storage temperatures.

This function is relevant to the fridge section *Fig. 1 (A)*

Use:

- Cool large amounts of food quickly.

Activating/deactivating the function

▶ Using the fridge section: activate the function when you add the goods.
▶ Activating/deactivating (see 6.2 Control concept) .

The function automatically turns off. The appliance goes back to normal mode. The temperature adjusts itself to the set level.

VarioTemp

This function allows you to use the freezer compartment *Fig. 1 (C)* as a variable temperature zone. You can set the temperature from -2 °C to 14 °C.

Liebherr recommends:

- Using the freezer compartment at temperatures between 4 °C and 9 °C to store food such as pre-prepared meals, cheese or preserves.
- Using the freezer compartment at 0 °C to store packaged fruit and vegetables.
- Using the freezer compartment at -2 °C to store fresh fish and seafood.
- Using the freezer compartment at temperatures between 10 °C and 14 °C to store foodstuffs sensitive to low temperatures, such as sweet potato, squash or tropical fruit, as well as any food or beverages that should not be too cold when consumed.

Activating/deactivating the function

▶ Activating/deactivating (see 6.2 Control concept) .
▷ *Fehler beim Erfassen! Element kann so nicht übersetzt werden! ID fehlt an user-interface: VarioTemp* function is active/inactive.

Setting the temperature

▶ Select the best temperature depending on the application.
▶ Set the value (see 6.2 Control concept) .
▷ The temperature gradually reaches the set value.

WARNING
Risk of food poisoning!
▶ Do not re-freeze thawed food.

▶ Cook defrosted food as soon as possible.

Cleaning the IceMaker*

When you switch on *Fehler beim Erfassen! Element kann so nicht übersetzt werden! ID fehlt an user-interface: VarioTemp*, you must clean the IceMaker.

▶ Clean the IceMaker with the *Fehler beim Erfassen! Element kann so nicht übersetzt werden! ID fehlt an user-interface: TubeClean* function (see 8.4.6 Cleaning the IceMaker*) .

SuperFrost

This function selects the lowest freezing temperature. This gives you colder storage temperatures.

This function refers to the freezer section *Fig. 1 (C)*.

Use:

- For storing more than 2 kg fresh food every day.
- Freezing fresh food quickly to the core.
- Increasing the cold reserves in the stored goods before defrosting the appliance.

Activating/deactivating the function

With a small amount to freeze:
▶ Activate 6 hours before use.
With a maximum amount to freeze:
▶ Activate 24 hours before use.
▶ Activating/deactivating (see 6.2 Control concept) .

The function automatically turns off. The appliance goes back to normal mode. The temperature adjusts itself to the set level.

PartyMode

This option offers an assortment of special functions and settings that are useful if you are having a party.

The following functions are on:

- *SuperCool**
- *SuperFrost*
- *IceMaker* and *MaxIce**

All the functions can be adjusted flexibly and separately. Changes are discarded when the function turns off.

Activating/deactivating the function

▶ Activating/deactivating (see 6.2 Control concept) .
▷ On: All functions are activated at the same time.
▷ Deactivated: Previously set temperatures are restored.

After 24 hours the function turns off automatically.

HolidayMode*

This function minimises the energy consumption during an extended absence. The temperature of the refrigerator compartment is set to 15 °C and this is displayed on the status screen when the temperature has been reached.*

The set freezer temperature remains unchanged.*

This function refers to the fridge section *Fig. 1 (A)*.*

Use:*

- Save energy if you plan to be away for a while.
- Avoid coming home to bad smells and mould.

Activating/deactivating the function*

▶ Empty everything from the fridge section.
▶ Activating/deactivating (see 6.2 Control concept) .
▷ On: Fridge temperature is raised.
▷ Off: the previously set temperature is restored.

SabbathMode*

With this function you can activate or deactivate the SabbathMode. If you activate this function, some electronic functions will be switched off. This allows your appliance to meet religious requirements on Jewish holidays such as the Sabbath and comply with STAR-K Kosher certification.

Appliance status with active SabbathMode
The status display continuously shows SabbathMode.
All functions in the display except the **Deactivate SabbathMode function** are locked.
Active functions remain active.
The display stays lit when you close the door.
The interior lighting is off.
Reminders are disabled. The set time intervals are paused.
Reminders and warnings are not displayed.
There is no door alarm.
There is no temperature alarm.
The IceMaker is out of operation.*
The defrost cycle only works for the specified time without taking account of appliance use.*
After a power failure, the appliance returns to SabbathMode.

Appliance status

Note
This appliance has certification from the “Institute for Science and Halacha”. (www.machonhalacha.co.il)

You can find a list of STAR-K-certified appliances at www.star-k.org/appliances.

Activating SabbathMode

WARNING
Danger of food poisoning from spoiled food!*
If you have SabbathMode activated and a power failure occurs, no message appears in the status display about the power failure. Once the power is restored, the appliance continues to operate in SabbathMode. The power failure may mean that food spoils and the consumption of this food could lead to food poisoning.
After a power failure:
▶ Do not consume food that was frozen and has thawed out.

▶ Call up the settings menu. (see 6.2 Control concept)
▶ Swipe left or right until corresponding function is displayed.

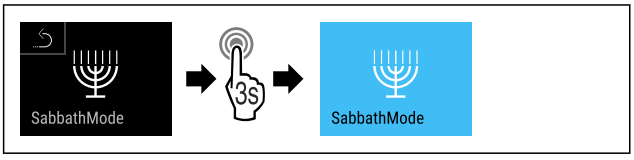

Fig. 12
▶ Complete the steps (see Fig. 2558) .
▷ SabbathMode is activated.
▷ Status display continuously shows SabbathMode.

Deactivating SabbathMode

▶ Call up the settings menu. (see 6.2 Control concept)
▶ Swipe left or right until corresponding function is displayed.

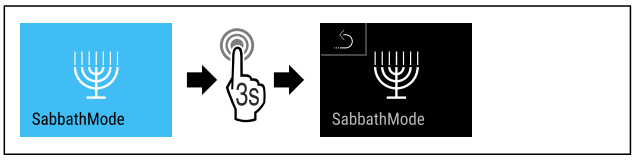

Fig. 13
▶ Complete the steps (see Fig. 2559) .
▷ SabbathMode is deactivated.

EnergySaver

This function activates or deactivates the energy-saving mode. When you activate this function, the energy consumption decreases and the temperature increases by 2 °C in the appliance. The food remains fresh, but the shelf life is shortened.

Temperature zone	Recommended setting	Temperature when EnergySaver activated
5 °C Fridge compartment*	5 °C*	7 °C*
-18 °C Freezer compartment*	-18 °C*	-16 °C*

Temperatures

Activating EnergySaver

▶ Swipe left or right until corresponding function is displayed.

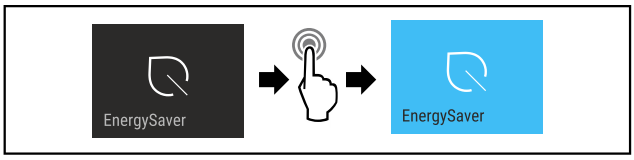

Fig. 14
▶ Complete the steps (see Fig. 2560) .
▷ Energy-saving mode is activated.

Deactivating EnergySaver

▶ Swipe left or right until corresponding function is displayed.

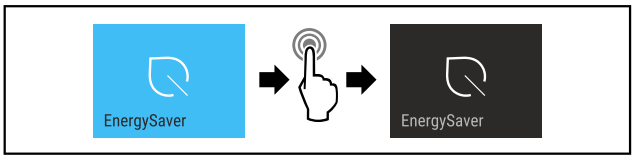

Fig. 15
▶ Complete the steps (see Fig. 2561) .
▷ Energy-saving mode is deactivated.

HydroBreeze*

HydroBreeze creates a fine mist in the drawer every 90 minutes for 4 seconds when the door is closed. This function is also activated when you open the door. The function is not activated when the appliance is delivered.

Use:

- For storing loose salad, vegetables and fruit with a high moisture content.

Choose from these options:

- 1: Duration of function while opening door 4 s
- 2: Duration of function while opening door 6 s
- 3: Duration of function while opening door 8 s
- Off: HydroBreeze is off.

Activating/deactivating the function

▶ Activating/deactivating (see 6.2 Control concept) .

IceMaker / MaxIce*

You can activate or deactivate ice cube production with the IceMaker function. Use the MaxIce function to increase the number of ice cubes in the IceMaker.

More information on the number of ice cubes:	(see 9.1 Technical specifications)
More information on the size of the ice cubes:	(see Ice cubes*)
More information on cleaning the lines of the IceMaker:	(see TubeClean*)

Activating IceMaker

Make sure that the following requirements are fulfilled:

❑ The water supply is established at the fixed water connection. See installation instructions.*
❑ IceMaker is put into operation. (see 7.11 IceMaker*)

▶ Swipe left or right until corresponding function is displayed.

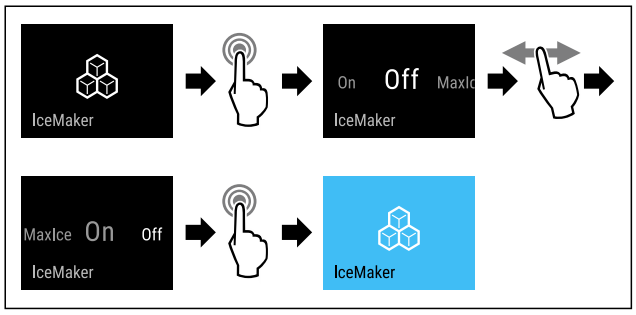

Fig. 16

▶ Complete the steps (see Fig. 2562) .

-or-

▶ Activate with the SmartDevice app.

▷ IceMaker is activated. It can take up to 24 hours for the IceMaker to produce the first ice cubes.

Activating the IceMaker with MaxIce

If you have not activated the IceMaker function before, make sure that the following requirements are met:

❑ The water supply is established at the fixed water connection. See installation instructions.*
❑ IceMaker is put into operation. (see 7.11 IceMaker*)

▶ Swipe left or right until corresponding function is displayed.

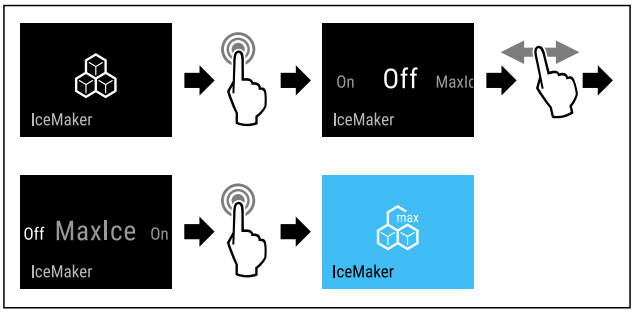

Fig. 17

▶ Complete the steps (see Fig. 2563) .

-or-

▶ Activate with the SmartDevice app.

▷ The IceMaker is activated with MaxIce.

Changing between the IceMaker and MaxIce

If you have activated the IceMaker and would like to change to MaxIce:

▶ Swipe left or right until corresponding function is displayed.

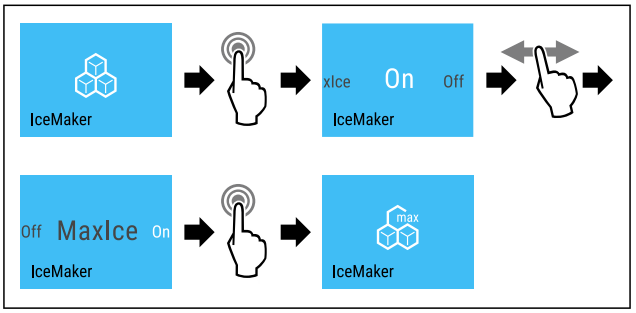

Fig. 18

▶ Complete the steps (see Fig. 2564) .
▷ The IceMaker is activated with MaxIce.

If you have activated MaxIce and would like to change to the IceMaker:

▶ Swipe left or right until corresponding function is displayed.

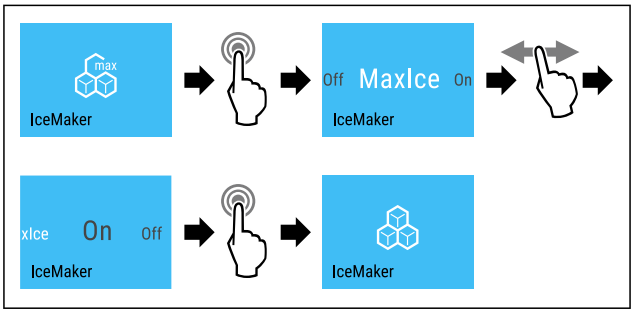

Fig. 19

▶ Complete the steps (see Fig. 2565) .
▷ IceMaker is activated.
▷ MaxIce is deactivated.

Deactivating the IceMaker / MaxIce

▶ Swipe left or right until corresponding function is displayed.

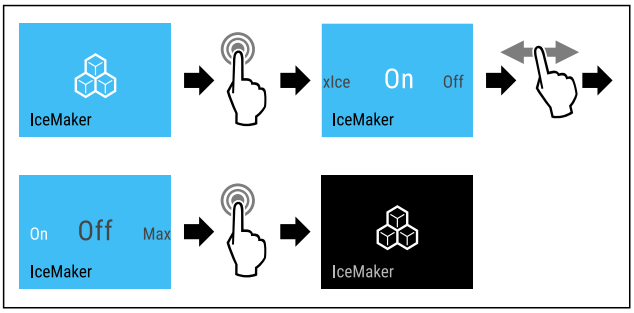

Fig. 20 Example illustration of the active IceMaker function

▶ Complete the steps (see Fig. 2566) .

-or-

▶ Deactivate with the SmartDevice app.

▷ IceMaker and MaxIce are deactivated.
▷ If ice cubes are currently being made, the system completes the process.
▷ The IceMaker goes off automatically.

5 Ice cubes*

Set the ice cube size.*

Choose the setting*

▶ Set the size in the Customer menu (see 6.2 Control concept) .

TubeClean*

This setting cleans the IceMaker pipes.*

Ensure that the following conditions are met:*

❑ IceMaker cleaning is ready (see 8.4.6 Cleaning the IceMaker*) .

Activating the setting*

▶ Activate the setting in the Customer menu (see 6.2 Control concept) .
▷ The rinse process is ready (max. 60 min.): Symbol flashes.
▷ Water pipes are rinsed: Symbol flashes.
▷ Rinsing process is complete: Function turns off automatically.

CleaningMode

Use this setting to easily clean the appliance.

This setting refers to the fridge section *Fig. 1 (A)*.

Use:

- Clean the fridge section by hand.

What happens on the appliance when this setting is on:

- The display permanently shows: CleaningMode.
- The fridge section is switched off.
- The internal light is on.
- Reminders and warnings are not shown. There is no acoustic signal.

Activating/deactivating settings

▶ Activating/deactivating the setting (see 6.2 Control concept) .
▷ On: fridge section is off. Light stays on.
▷ Off: preset temperature is restored.

After 60 min the setting turns off automatically. The appliance then continues running in normal mode.

Display brightness

Set the brightness level of the display.

You can set the following brightness levels:

- 40%
- 60%
- 80%
- 100%

Choose the setting

▶ Set the level (see 6.2 Control concept) .

Door alarm

Set the time before the door alarm (see Close the door) sounds.

The options are as follows:

- 1 min
- 2 min
- 3 min
- Off

Choose the setting

▶ Set the time (see 6.4 Fault messages) .

Entry lock

This setting prevents unintentional use of the appliance, e.g. by children.

Use:

- Avoid settings being changed unintentionally.
- Avoid the appliance being switched off unintentionally.
- Avoid the temperature being changed unintentionally.

Activating/deactivating settings

▶ Activating/deactivating. (see 6.2 Control concept)



Language

This setting lets you choose the language of the display.

Choose from the following languages:

- German
- English
- French
- Spanish
- Italian
- Dutch
- Czech
- Polish
- Portuguese
- Russian
- Chinese

Activating/deactivating settings

▶ Activating/deactivating (see 6.2 Control concept) .



Info

This setting allows the appliance information to be read out as well as access to the customer menu.

It provides the following information:

- Model name
- Index
- Serial number
- Service number

Show appliance data

▶ Swipe in the display until Settings appears.
▶ Confirm the display.
▶ Swipe in the display until About appears.
▶ Read the appliance info.



Reminder

Reminders are given out acoustically by a beep and visually by a symbol in the display. The signal gets louder until the alert stops.



Replace FreshAir active carbon filter

This message appears when the air filter needs replacing.
▶ Change the air filter every six months.
▶ Confirm the message with OK.
▷ The service interval resets.
▷ The air filter guarantees the air quality in the fridge.

Activating the setting

▶ Activating/deactivating (see 6.2 Control concept) .



Reset

This function resets all settings to the factory settings. All settings that you have made thus far will be reset to their original values.

Activating the setting

▶ Activate (see 6.2 Control concept) .

6.4 Fault messages

Fault messages appear in the display. There are two categories of fault message:

Category	Meaning
Message	Reminder of general procedures. You can carry out these procedures to eliminate the message.
Warning	Appears when there are malfunctions. A signal sounds in addition to the display. The signal becomes louder until you acknowledge by tapping the display. You can eliminate simple defects yourself. For more serious defects, you must contact customer service.

6.4.1 Warnings



Close the door

This message appears if the door is open for too long.

You can set how long it takes for this message to appear .
▶ Stop alarm: Confirm the message.
-or-
▶ Close the door.



Power cut

This message appears if the freezer temperature increased due to a power cut. After the power is restored, the appliance continues to work at the set temperature.
▶ Stop alarm: Confirm the message.
▷ Temperature alert appears (see Temperature alarm) .



Temperature alarm

This message appears if the freezer temperature does not match the set temperature.

Variations in temperature could be because:

- Hot, fresh food was inserted.
- Too much warm room air flowed in when rearranging and removing food.
- The power was cut off for a while.
- The appliance is faulty.

When the fault is eliminated the appliance continues to work at the set temperature.
▶ Confirm the display.
▷ The highest temperature is shown.
▶ Confirm display again.
▷ The status display is displayed.
▷ The current temperature is shown.



Error

This message appears if there is a fault with the appliance. An appliance component indicates a fault.
▶ Open the door.
▶ Note down the fault code.
▶ Confirm the message.
▷ The signal tone stops.
▷ The status display appears.
▶ Close the door.
▶ Contact customer service. (see 9.4 Customer Services)

6.4.2 Message



Insert IceMaker drawer*

This message appears if the IceMaker drawer is open.
▶ Push in the IceMaker drawer.
▷ The message disappears.
▷ The IceMaker produces ice cubes.

6.4.3 DemoMode

If “D” appears on the display, demo mode is on. This option is designed for retailers, as it turns off all the cooling functions.

Stopping DemoMode

If you see the following running in the display:
▶ Confirm the display within the countdown.
▷ DemoMode is off.
If the timer is not running:
▶ Unplug the appliance.
▶ Plug the appliance in again.
▷ DemoMode is off.

7 Features

7.1 Door rack

7.1.1 Move/remove the door rack

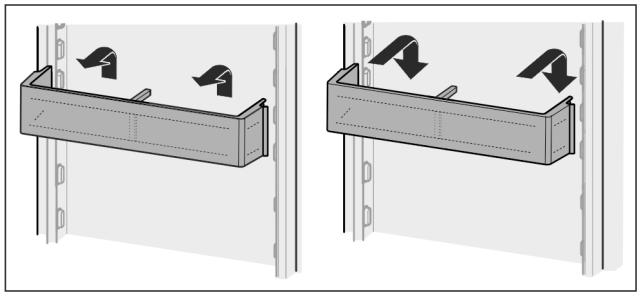

Fig. 21

▶ Slide the rack upwards.
▶ Pull forwards.
▶ Re-insert it in reverse order.

7.1.2 Disassembling the door rack

The door rack can be taken apart for cleaning.

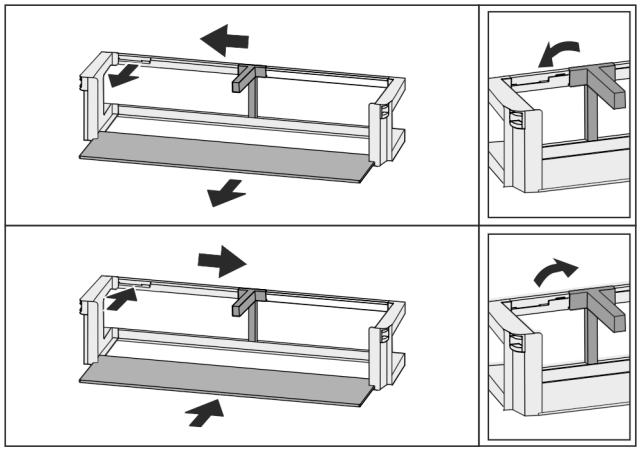

Fig. 22

▶ Disassemble the door rack.

7.2 Shelves

7.2.1 Adjusting/removing the shelves

The shelves are prevented from being pulled out accidentally by pull out stops.

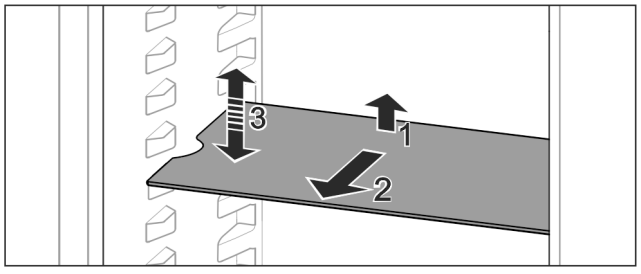

Fig. 23

▶ Lift the shelf and pull forward.
▷ Line up the side runner.
▶ Adjust the height of the shelf: Lift or lower it to the desired height and slide it in.

-or-

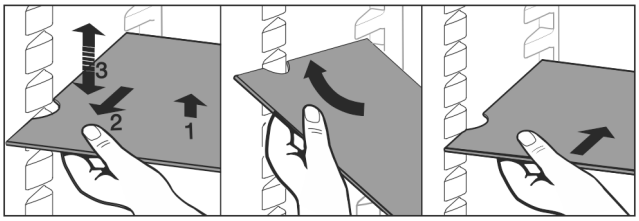

Fig. 24

▶ Remove the shelf completely: Pull it out to the front.

▶ Easier removal: Set the shelf at an angle.
▶ Insert the shelf again: Slide it in all the way.
▷ The pull-out stoppers point downwards.
▷ The pull-out stoppers are behind the front support.

7.3 Dividing shelf

7.3.1 Using the dividing shelf

The shelves are prevented from being pulled out accidentally by pull out stops.

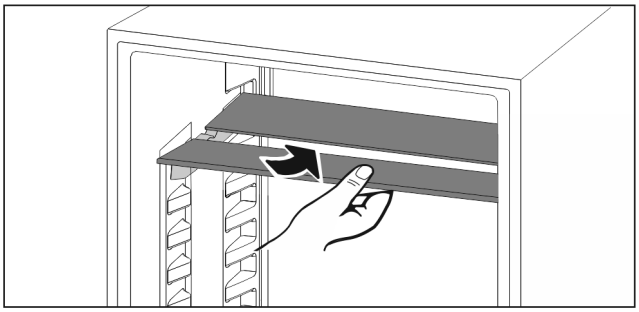

Fig. 25

▶ Push the dividing shelf underneath as shown.

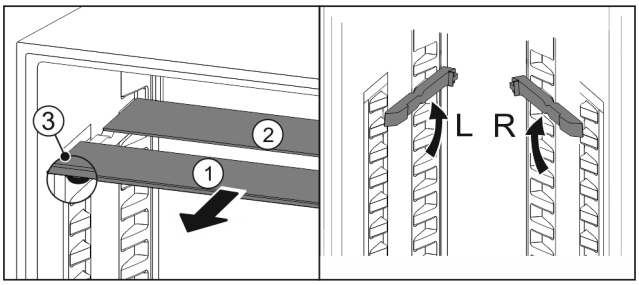

Fig. 26

Adjusting the height:

▶ Pull the glass panels out *Fig. 26 (1)* from the front, one at a time.
▶ Release the support rails and click in at the height you want.
▶ Slide in the glass panels one at a time.
▷ Flat pull-out stoppers at the front, right behind the support rails.
▷ High pull-out stoppers at the back.

Using both shelves:

▶ Hold the glass panel with one hand and pull it to the front.
▷ The glass panel *Fig. 26 (1)* and trim strip are at the front.
▷ The stops *Fig. 26 (3)* point down.

7.4 VarioSafe*

The VarioSafe provides space for compact foodstuffs and packages, pots and glasses.

7.4.1 Using the VarioSafe

You can remove the drawer and slide it back in at 2 different heights. This is handy for storing taller items in the drawer.

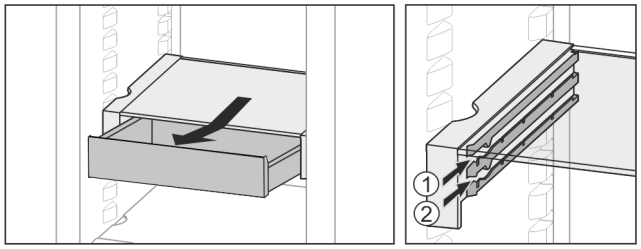

Fig. 27

▶ Remove the drawer.
▶ Slide back at the height you want *Fig. 27 (1)* or *Fig. 27 (2)*.

7.4.2 Repositioning the VarioSafe

You can shift the height of the entire VarioSafe.

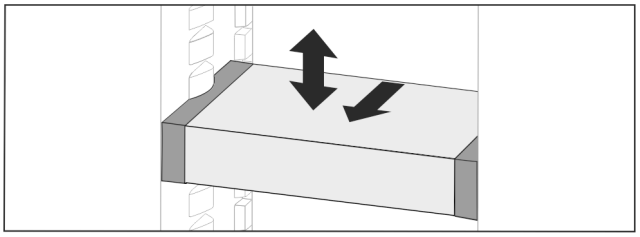

Fig. 28

▶ Pull forwards.
▷ Line up the side runner.
▶ Lift or lower to the height you want.
▶ Slide to the rear.

7.4.3 Removing the entire VarioSafe

You can remove VarioSafe as a whole unit.
▶ Pull forwards.
▷ Line up the side runner.

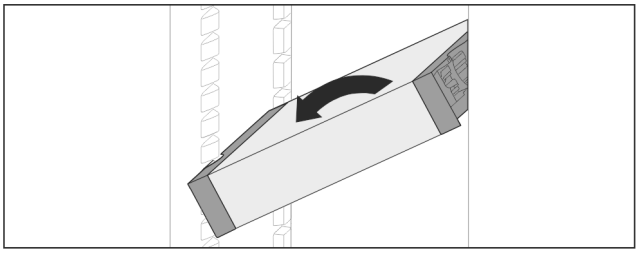

Fig. 29

▶ Tip to the side and pull towards you.

7.4.4 Disassembling the VarioSafe

You can take the VarioSafe apart for cleaning.

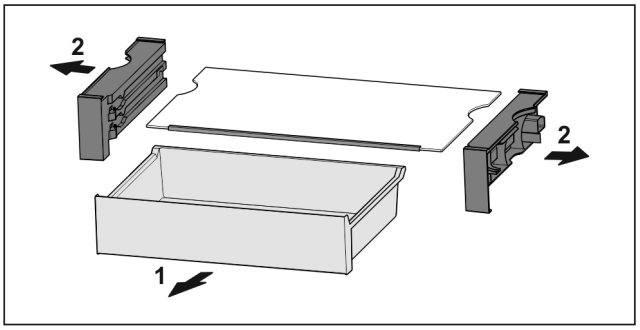

Fig. 30

▶ Disassembling the VarioSafe

7.5 Adjustable bottle shelf

7.5.1 Using the bottle shelf

In the bottom of the fridge section you can either use the variable bottle shelf or the glass panel.

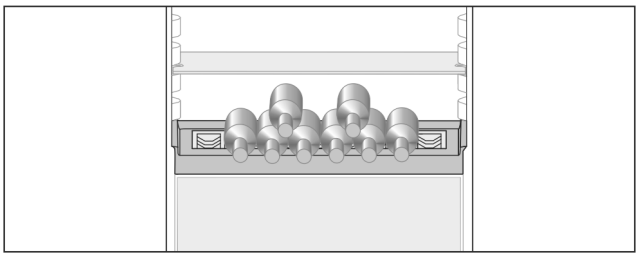

Fig. 31

▶ Remove the glass panel and store in a safe place.
▶ Lay bottles with their base towards the rear wall.

Note
If the bottles are protruding over the front of the bottle shelf:
▶ Move the lower door rack up a place.

7.5.2 Removing the bottle shelf

You can remove the bottle shelf for cleaning.
▶ Remove the glass panel above the bottle shelf.

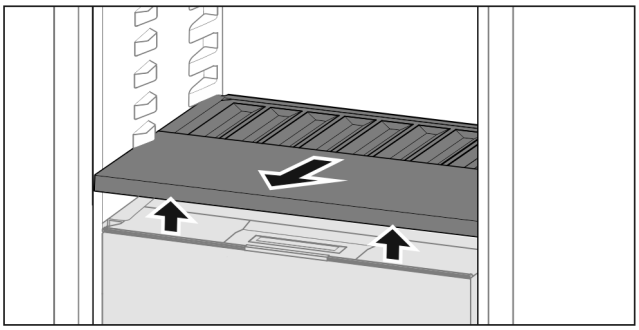

Fig. 32

▶ Lift the bottle shelf at the front and pull out.

Note
Liebherr recommends the following:*
Do not place any goods on the drawer cover below.*

7.5.3 Inserting the bottle shelf

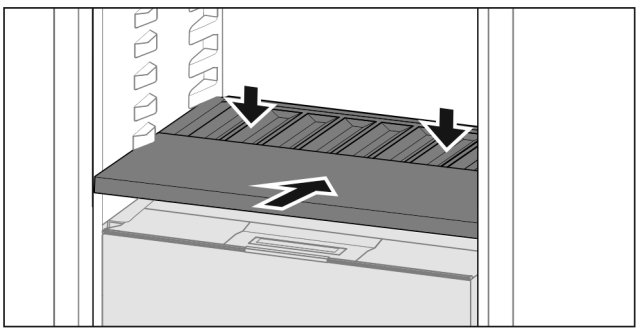

Fig. 33

▶ Slide in the bottle shelf until it engages and push down.
▷ The lugs at the back of the bottle shelf are connected automatically.
▷ LED comes on.

7.6 Drawers

You can remove the drawers for cleaning.

*** Depending on model and options**

You can remove the drawers to use VarioSpace.

The way to remove/insert the drawers varies depending on the pull-out system. Your appliance can contain various pull-out systems.

Note
The energy consumption increases and the cooling power goes down if ventilation is not sufficient.
▶ Leave the bottom drawer in the appliance!
▶ Always leave the fan air vents clear on the back wall!

7.6.1 Drawer on telescopic rails

The drawer runs on extendible rails (telescopic rails). There are fully extendible telescopic rails and telescopic rails with partial pull-out. Drawers which are fully extendible can be pulled out fully from the appliance. Drawers with partial pull-out cannot be removed fully from the appliance. The system in your appliance depends on the type of appliance.

Fully extendible

If you have fully extendible rails, there is a clamp located at the back on the left and right of the rail.

Removing drawer

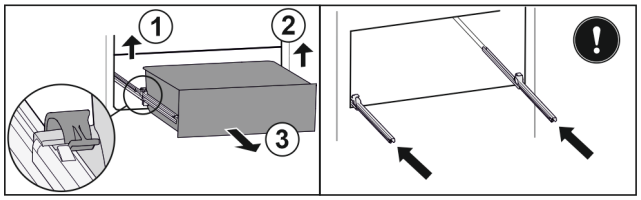

Fig. 34

▶ Pull out drawer as far as it will go.
▶ Lift left clamp and simultaneously pull drawer forwards on the left. *Fig. 34 (1)*
▶ Lift right clamp and simultaneously pull drawer forwards on the right. *Fig. 34 (2)*
▶ Remove drawer to the front. *Fig. 34 (3)*
▶ Slide rails in.

Inserting drawer

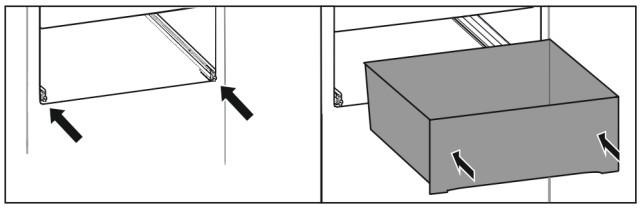

Fig. 35

▶ Slide rails in.
▶ Place drawer on rails.
▶ Slide in drawer to the back.
▷ Drawer latches in audibly at the back.

Partial pull-out freezer compartment*

Note
If the magnet on the top drawer in the freezer compartment is damaged or removed, the door sensors will malfunction.
▶ Do not damage or remove the magnet.

Removing drawer

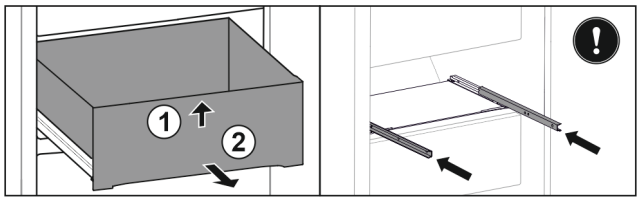

Fig. 36

If the drawer is in the top freezer:
▶ Pull out drawer as far as it will go.
▶ Lift up drawer at the front. *Fig. 36 (1)*
▶ Remove drawer to the front. *Fig. 36 (2)*
▶ Slide rails in.

-or-

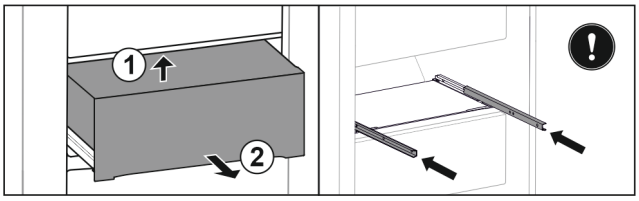

Fig. 37

If the drawer is in the middle part of the freezer compartment:
▶ Pull out drawer half-way.
▶ Lift drawer from below. *Fig. 37 (1)*
▶ Remove drawer to the front. *Fig. 37 (2)*
▶ Slide rails in.

Inserting drawer

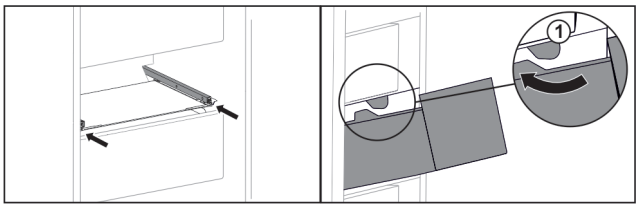

Fig. 38

▶ Slide rails in.
▶ Guide drawer around the stoppers *Fig. 38 (1)*.
▶ Place drawer on rails.
▶ Slide in drawer to the back.

7.7 Fruit & Vegetable safe cover

You can remove the compartment cover for cleaning.

7.7.1 Removing the compartment cover*

Ensure that the following conditions are met:
❑ Bottle shelf is removed (see 7.5 Adjustable bottle shelf) .

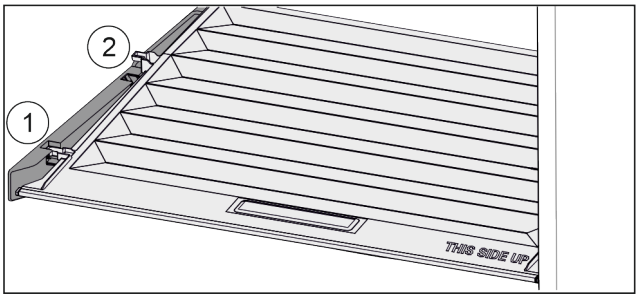

Fig. 39

When the drawers are removed:
▶ Pull the lid up at the front to the opening in the retaining parts *Fig. 39 (1)*.
▶ Lift from the back and pull it up and out *Fig. 39 (2)*.

7.7.2 Inserting the compartment cover

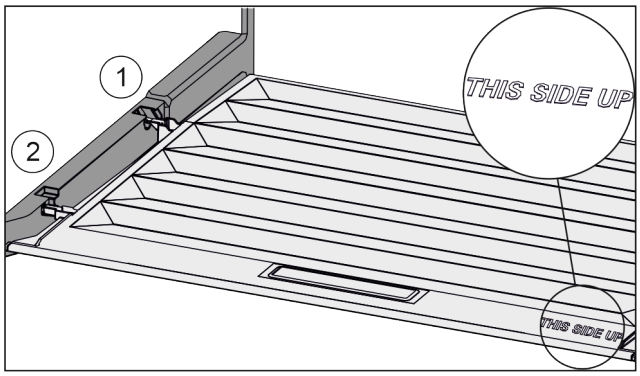

Fig. 40

If the text THIS SIDE UP points upwards:

▶ Insert the lip of the cover over the opening of the rear bracket *Fig. 40 (1)* and click into place *Fig. 40 (2)*.
▶ Position the cover where you want it (see 7.8 Adjusting the moisture levels) .

7.8 Adjusting the moisture levels

You can adjust the moisture in the drawer yourself by adjusting the compartment cover.

The compartment lid is attached to the drawer and can be hidden by a shelf or additional drawers.

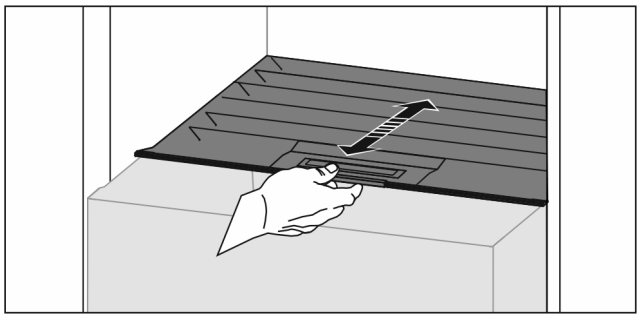

Fig. 41

Low air humidity

▶ Open the drawer.
▶ Slide the compartment cover forwards.
▷ With the drawer closed: Gap between the cover and the compartment.
▶ Switch off HydroBreeze.*
▷ The air moisture in the Safe decreases.

High air moisture

▶ Open the drawer.
▶ Slide the cover back.
▷ With the drawer closed: The cover seals the compartment.
▶ Activate the HydroBreeze.*
▷ The air moisture in the Safe increases.

If there is too much moisture in the compartment:

▶ Choose the setting “low air moisture”.

-or-

▶ Remove any excess moisture with a cloth.

Note

You can apply the “low air moisture” setting to the Fruit & Vegetable-Safe and the Meat & Dairy-Safe.

▶ Set the “low air moisture” option.

7.9 HydroBreeze*

HydroBreeze emits a mist over the refrigerated goods to provide moisture every time the door is opened.

The HydroBreeze and its water tank are located in the adjustable bottle shelf.

Ensure that the following conditions are met:

- The water tank is clean (see 8.4.4 Clean the components) .
- The water tank is properly engaged.
- Moisture is set to “high moisture” (see 7.8 Adjusting the moisture levels) .
- HydroBreeze is on (see HydroBreeze*) .

7.9.1 Fill the water tank

WARNING

Unclean water!
Contaminants.

▶ Only fill with drinking water.
▶ The HydroBreeze is off: empty water tank.
▶ The HydroBreeze is no longer in use: empty water tank.

NOTICE

Sugar-content liquids!
Damage to HydroBreeze.

▶ Only fill with drinking water.

Note

Only use filtered, decarbonised water for the best quality drinking water and to make the HydroBreeze, work smoothly.

This water quality can be achieved using a table water filter of the kind available in trade retail outlets.

▶ Only ever fill the water tank with filtered, decarbonised drinking water.

The water tank is built into the adjustable bottle shelf (see 1.2 Overview of the appliance and equipment) .

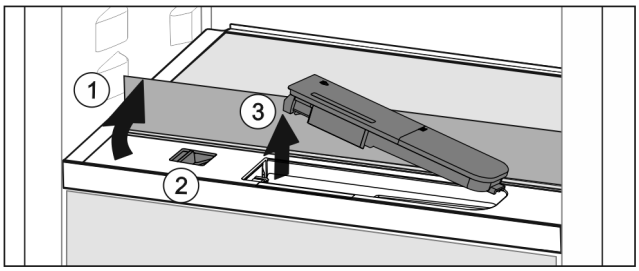

Fig. 42

▶ Press on the back-left corner of the front glass plate.
▷ The glass panel folds up at the front.
▶ Lift the glass panel and fold towards the rear until it clicks into place *Fig. 42 (1)*.
▷ Glass panel stands upright.
▶ Slide the slider *Fig. 42 (2)* to the left.
▷ The water tank jumps out of its recess.
▶ Remove the water tank *Fig. 42 (3)*.
▶ Cleaning the water tank (see 8.4.4 Clean the components) .

Square opening:

▶ Fill with drinking water up to the marker.
▶ Insert the water tank into the recess, bottom first.
▶ Slowly lower the front part and push the tank in.
▷ The water tank is clicked into place.

7.9.2 Dismantling the water tank

You can take the water tank apart for cleaning.

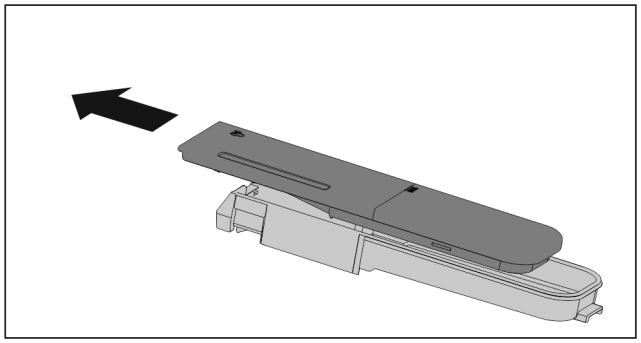

Fig. 43

▶ Dismantling the water tank.

7.10 Glass shelves

You can remove the glass shelves under the drawers for cleaning.

You can remove the glass shelves under the drawers to use VarioSpace.

7.10.1 Removing / inserting the glass shelf

Make sure that the following requirements are fulfilled:

❑ Glass shelf under the drawer: The drawer has been removed. (see 7.6 Drawers)

Removing glass shelf

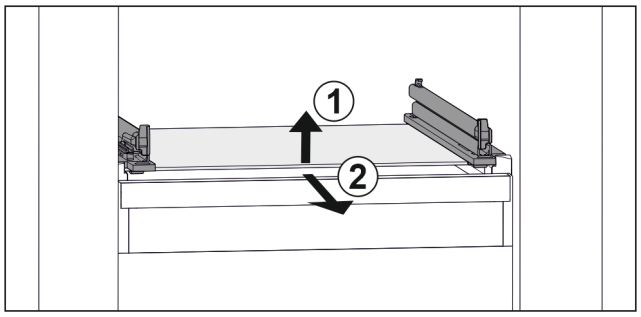

Fig. 44 Example illustration of glass shelf

▶ Lift glass shelf at the front. *Fig. 44 (1)*

▶ Take out glass shelf to the front. *Fig. 44 (2)*

Inserting glass shelf

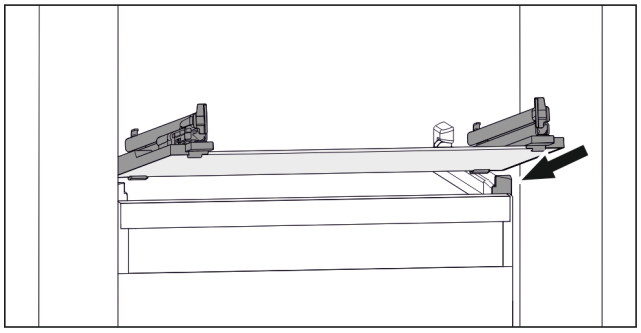

Fig. 45 Example illustration of glass shelf

▶ Position glass shelf at an angle behind the stoppers. (see Fig. 2591)

▶ Lower glass shelf.

▶ Slide in glass shelf to the back.

7.11 IceMaker*

The IceMaker will produce ice cubes for household use only.

Ensure that the following conditions are met:

- IceMaker is cleaned (see 8 Maintenance) .
- IceMaker drawer is cleaned.
- IceMaker drawer is fully inserted.

7.11.1 Producing ice cubes

The volume depends on the freezing temperature. The colder the temperature, the more ice cubes the system can produce in a certain time period.

After the IceMaker is turned on for the first time, it can take up to 24 hours for the first ice cubes to be made.

▶ Activate the IceMaker function (see 6.2 Control concept) .

▶ To make a high number of ice cubes: Activate the MaxIce function (see 6.2 Control concept) .

▶ To make a high number of ice cubes: Move the divider in the IceMaker drawer or remove it completely.*

▶ Distribute the ice cubes evenly in the drawer to increase the capacity.

▶ Closing the drawer: IceMaker starts making ice cubes again automatically.

Note

When a certain level is reached in the IceMaker drawer, it stops producing ice cubes. The IceMaker does not fill the drawer all the way to the top.

7.11.2 Using the drawer with the IceMaker deactivated*

If you deactivate the IceMaker, then you can use the entire IceMaker drawer as a freezer drawer.

▶ Deactivate IceMaker. (see 6.3.15.4 Deactivating the IceMaker / MaxIce)

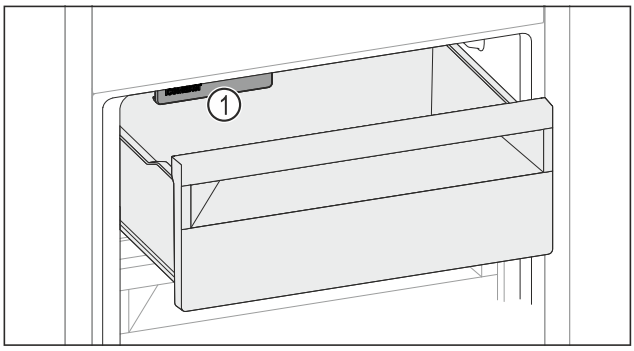

Fig. 46

▶ Place food in drawer.

If you put food in the left side of the drawer:

▶ Watch out for the IceMaker *Fig. 46 (1)*.

7.12 VarioSpace

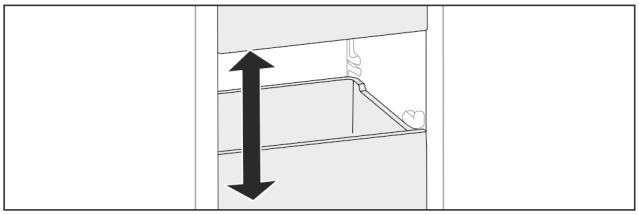

Fig. 47

You can remove drawers and glass panels from your appliance. This provides more room for large food items such as poultry, joints of meat, large game, and tall baked products. You can then freeze these items whole for later preparation.

▶ Note the weight limits on the drawers and glass panels (see 9.1 Technical specifications) .

7.13 Accessories

7.13.1 Butter dish*

Opening/closing the butter dish

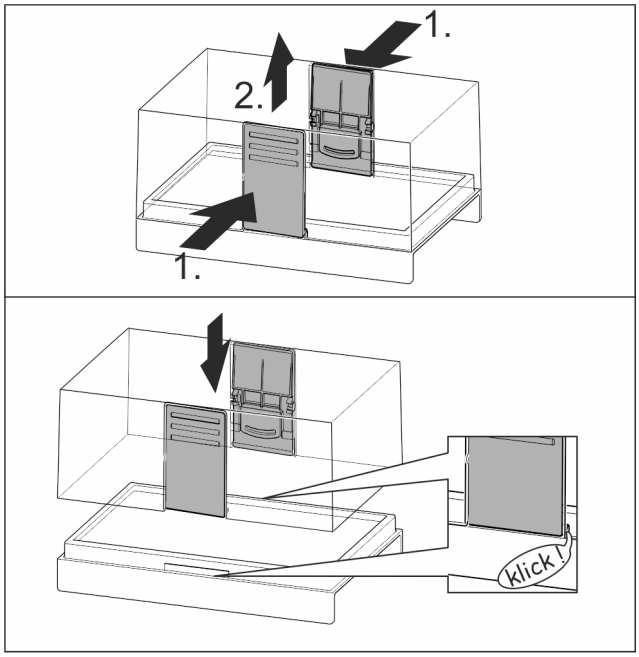

Fig. 48

Dismantling the butter dish

You can take the butter dish apart for cleaning.

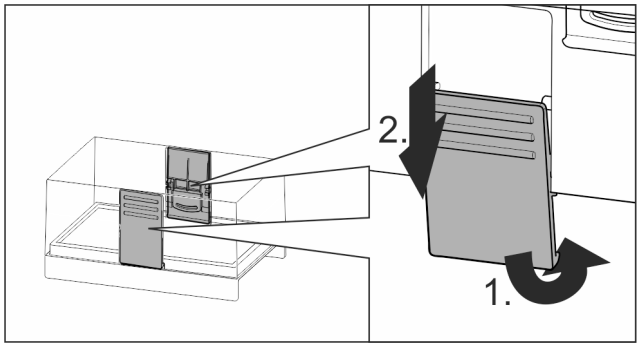

Fig. 49

▶ Disassembling the butter dish.

7.13.2 Egg rack*

You can pull out and turn the egg rack. You can use both sides of the egg rack so you can label specifics like the purchase date.

Using the egg rack

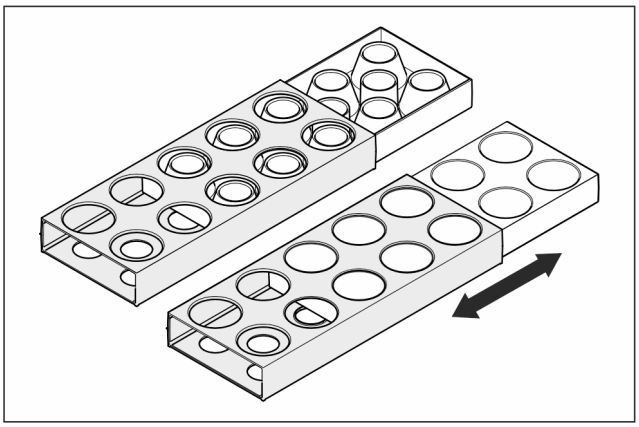

Fig. 50

▶ Top layer: for storing hen eggs.
▶ Bottom layer: for storing quail eggs.

7.13.3 Bottle holder*

Using the bottle holder

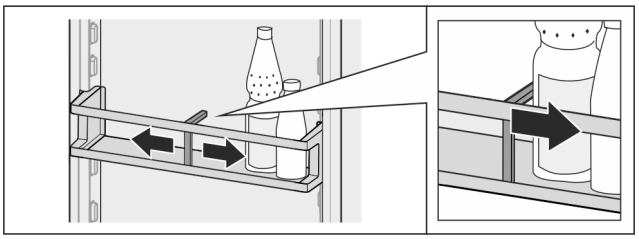

Fig. 51

▶ Push the bottle holder onto the bottles.
▷ The bottles are prevented from falling over.

Removing the bottle holder

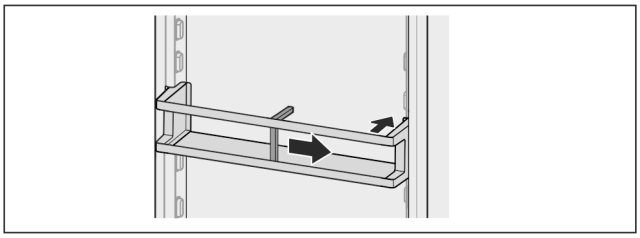

Fig. 52

▶ Move the bottle holder all the way to the right.
▶ Push the bottle holder to the back to remove.

7.13.4 FlexSystem*

Using the FlexSystem

The FlexSystem helps you store and organise your food in a clear and flexible way. It lets you clearly divide your food into fruit, vegetables or by use-by dates, for example.

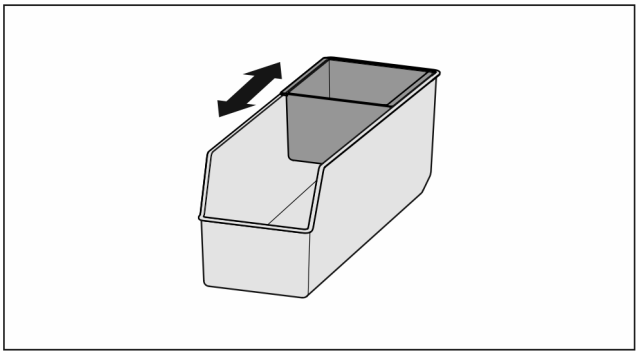

Fig. 53

▶ Move the inner shell.

Removing the FlexSystem

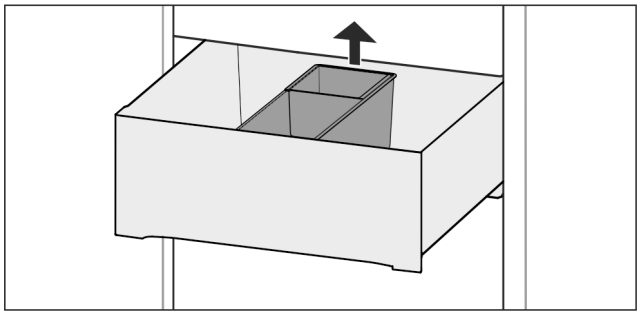

Fig. 54

▶ Lift the FlexSystem from the back.
▶ Pull up and out.

Inserting the FlexSystem

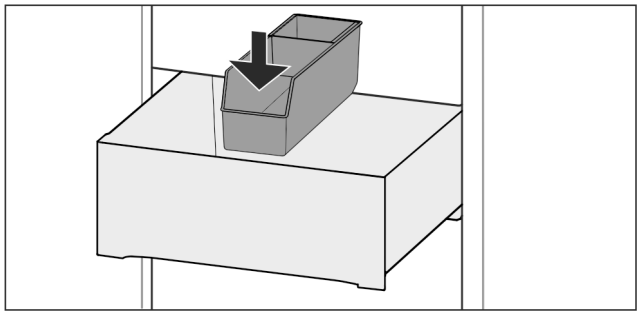

Fig. 55

▶ Insert the FlexSystem front-first.
▶ Lower the rear part.

Disassembling the FlexSystem

You can take the FlexSystem apart for cleaning.

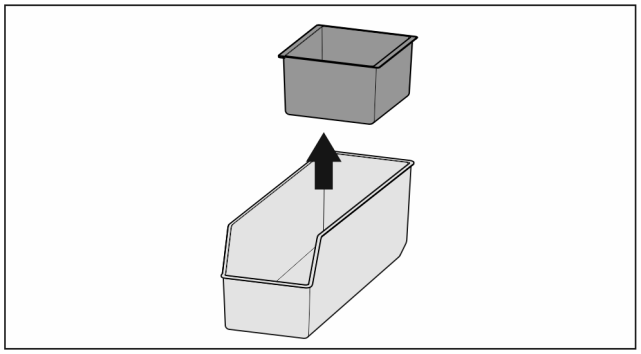

Fig. 56

▶ Disassembling the FlexSystem

7.13.5 Freezer pack

Freezer packs prevent the temperature rising too quickly should there be a power cut.

The freezer packs are in the drawer.

Using the freezer pack

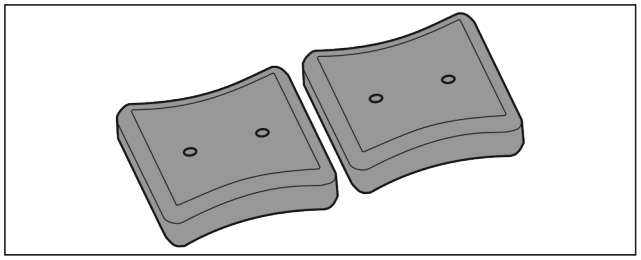

Fig. 57

When the freezer packs are fully frozen:

▶ Place on the frozen goods in the top, front part of the freezer.

7.13.6 Ice cube tray with cover*

Using the ice cube tray

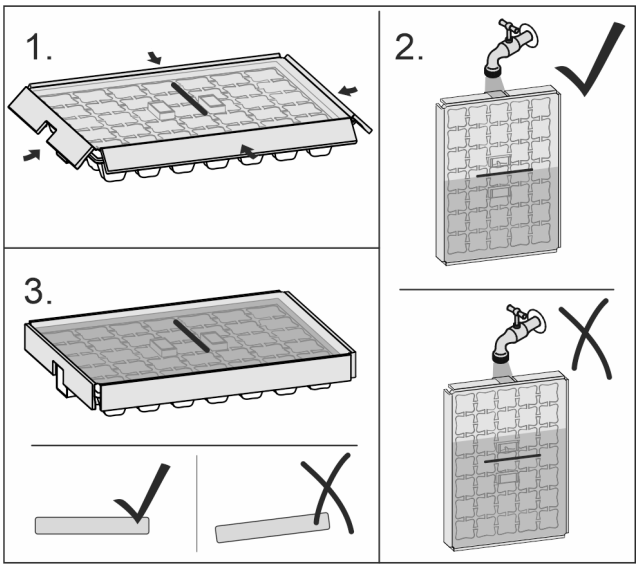

Fig. 58

When the water is frozen:

▶ Hold ice cube tray under hot water for a short time.
▶ Remove the lid.
▶ Gently turn the ends of the ice cube tray in opposite directions.
▶ Release the ice cubes.

Dismantling the ice cube tray

You can take the ice cube tray apart for cleaning.

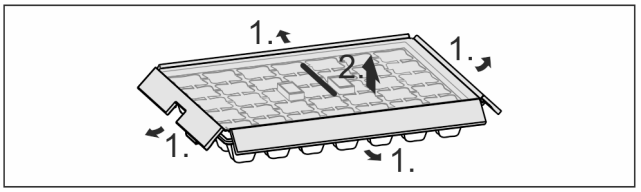

Fig. 59

▶ Disassembling the ice cube tray.

7.13.7 Flexible ice compartment divider*

The IceMaker's ice cube drawer has a flexible ice compartment divider. This allows you to store larger quantities of ice cubes or additional food items as needed. You can move or remove the ice compartment divider.

Moving in the flexible ice compartment divider

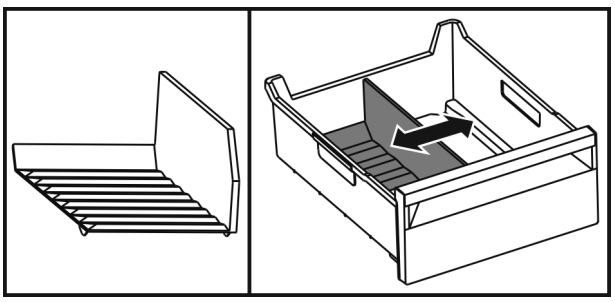

Fig. 60 Example illustration of the ice compartment divider

▶ Move the ice compartment divider to the desired position.

Removing the flexible ice compartment divider

Make sure that the following requirements are fulfilled:

❑ Ice cube drawer is removed. (see 7.6 Drawers)

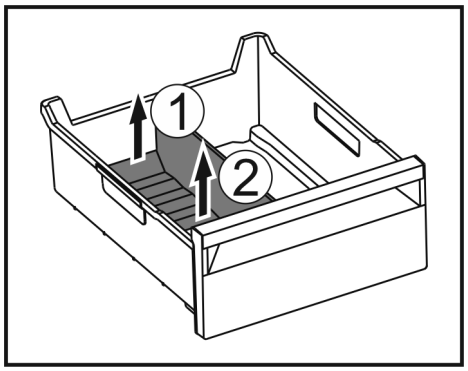

Fig. 61

▶ Lift the rear part of the ice compartment divider. *Fig. 61 (1)*

▶ Remove the ice compartment divider upwards. *Fig. 61 (2)*

Putting in the flexible ice compartment divider

Make sure that the following requirements are fulfilled:

❑ Ice cube drawer is removed. (see 7.6 Drawers)

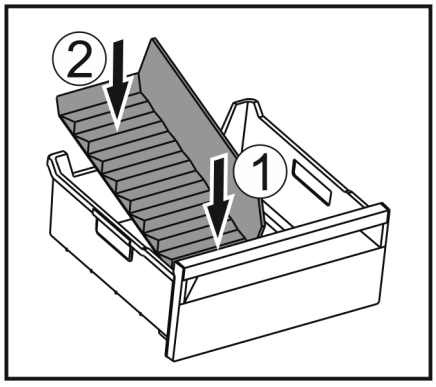

Fig. 62

▶ Insert the front part of the ice compartment divider. *Fig. 62 (1)*

▶ Lower the rear part of the ice compartment divider to the drawer bottom. *Fig. 62 (2)*

8 Maintenance

8.1 FreshAir carbon filter

The FreshAir carbon filter is in the compartment above the fan.

It guarantees the best air quality.

❑ Replace the carbon filter every 6 months.
When the reminder is set, a message on the display prompts you to change it.

❑ The carbon filter can be disposed of with the regular household waste.

Note

FreshAir activated charcoal filters can be purchased from the Liebherr-Hausgeräte store at home.liebherr.com/shop/de/deu/zubehor.html.

8.1.1 Removing the FreshAir carbon filter

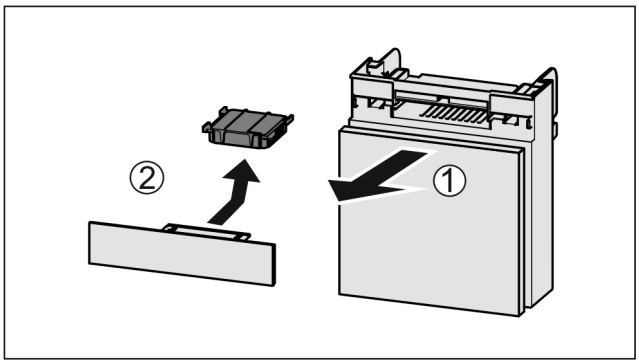

Fig. 63

▶ Pull out the compartment *Fig. 63 (1)*.

▶ Remove the carbon filter *Fig. 63 (2)*.

8.1.2 Inserting the FreshAir carbon filter

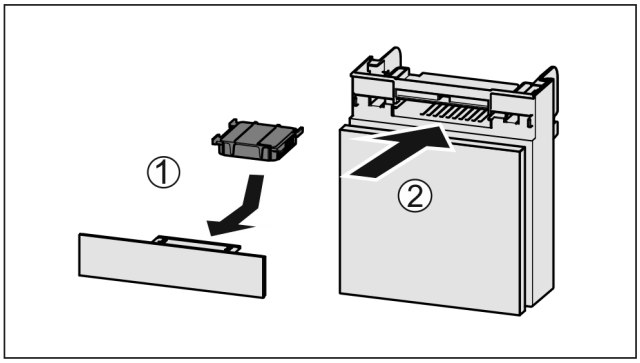

Fig. 64

▶ Insert the carbon filter as shown in the diagram *Fig. 64 (1)*.

▷ The carbon filter clicks into place.
If the carbon filter is pointing downwards:

▶ Push the compartment in *Fig. 64 (2)*.

▷ The carbon filter is now ready for use.

8.2 Disassembling / assembling pull-out systems

8.2.1 Notes on disassembly

You can disassemble some of the pull-out systems for cleaning. Your appliance can contain a variety of pull-out systems.

The following pull-out systems can be disassembled or cannot be disassembled:

Pull-out system	can be disassembled / cannot be disassembled
Fully extendible	cannot be disassembled
Partial pull-out freezer compartment*	can be disassembled (see 8.2.2.1 Partial pull-out freezer compartment*) *

8.2.2 Drawer on telescopic rails

Partial pull-out freezer compartment*

Disassembling pull-out system

Make sure the following prerequisites are met:

❑ Drawer has been removed.

❑ Glass shelf has been removed. (see 7.10 Glass shelves)

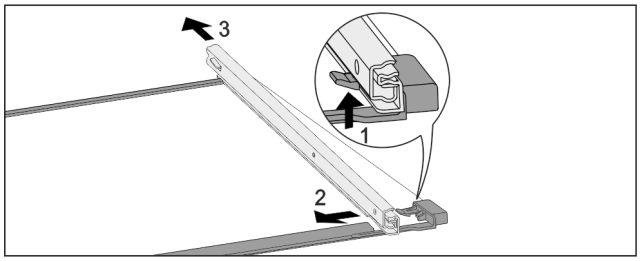

Fig. 65 Glass shelf with rails

- ▶ Push up front click-in hooks. *Fig. 65 (1)*
- ▶ Move the pull-out rails to the side *Fig. 65 (2)* and to the rear *Fig. 65 (3)*.

Installing pull-out system

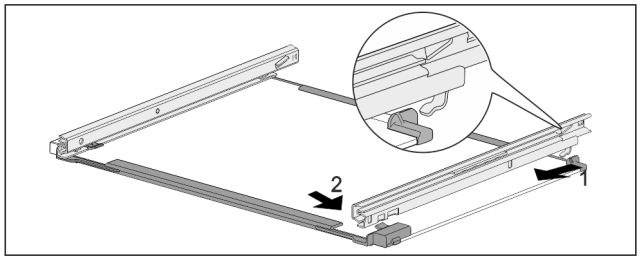

Fig. 66 Glass shelf with rails

- ▶ Hook in rail at the back. *Fig. 66 (1)*
- ▶ Hook in rail at the front. *Fig. 66 (2)*

8.3 Defrosting the appliance

8.3.1 Defrosting the fridge compartment*

8.3.1 Defrosting the BioFresh compartment*

Defrosting is performed automatically. The water from the thawing process drains through the outlet and evaporates.

- ▶ Clean the drain opening regularly (see 8.4 Cleaning the appliance) .

8.3.2 Defrosting the freezer compartment with NoFrost*

Defrosting is performed automatically with the NoFrost system. The moisture is deposited on the evaporator, is periodically defrosted and evaporates.

The appliance does not need to be defrosted.

8.4 Cleaning the appliance

8.4.1 Ready

WARNING
Danger of electric shock!
- ▶ Remove the refrigerator connector or interrupt the power supply.

WARNING
Risk of fire
- ▶ Do not damage the refrigeration circuit.

- ▶ Empty the appliance.
- ▶ Remove mains connector.

-or-

- ▶ Activate CleaningMode. (see CleaningMode)

8.4.2 Clean the housing

NOTICE
Improper cleaning!
Damage to the appliance.
- ▶ Only use soft cleaning cloths and ph-neutral all-purpose cleaners.
- ▶ Do not uses abrasive sponges or steel wool which may cause scratches.
- ▶ Do not use any sharp or abrasive cleaning agents, nor any that contain sand, chloride or acid.

WARNING
Risk of injury and damage as a result of hot steam!
Hot steam can lead to burns and can damage the surfaces.
- ▶ Do not use any steam cleaners!

- ▶ Wipe the housing down with soft, clean cloth. If very dirty, use lukewarm water with a neutral cleaner. Glass surfaces can also be cleaned with glass cleaner.

8.4.3 Cleaning the interior

NOTICE
Improper cleaning!
Damage to the appliance.
- ▶ Only use soft cleaning cloths and ph-neutral all-purpose cleaners.
- ▶ Do not uses abrasive sponges or steel wool which may cause scratches.
- ▶ Do not use any sharp or abrasive cleaning agents, nor any that contain sand, chloride or acid.

- ▶ Plastic surfaces: clean by hand with a soft clean cloth, lukewarm water and a little detergent.
- ▶ Metal surfaces: clean by hand with a soft clean cloth, lukewarm water and a little detergent.
- ▶ Drain hole: remove deposits using a thin item (for example a cotton bud).

8.4.4 Clean the components

NOTICE
Improper cleaning!
Damage to the appliance.
- ▶ Only use soft cleaning cloths and ph-neutral all-purpose cleaners.
- ▶ Do not uses abrasive sponges or steel wool which may cause scratches.
- ▶ Do not use any sharp or abrasive cleaning agents, nor any that contain sand, chloride or acid.

Clean with a soft, clean cloth, lukewarm water and some detergent:

- VarioSafe*
- Fruit & Vegetable safe cover*
- Drawer
  Please note: Do not remove the magnet on the drawer. The magnet ensures the functionality of the IceMaker.*
- Divider in the IceMaker drawer*
- Adjustable bottle shelf
- FlexSystem*

Clean with a damp cloth:

- Retractable rails
  Please note: The grease in the tracks is used for lubrication and must not be removed!

Wash in the dishwasher up to 60 °C:

- Door rack
- Bottle rack*
- Shelf

- Dividing shelf
- Holder of the dividing shelf
- HydroBreeze water tank and water tank lid*
- Egg rack*
- Butter dish*
- Ice cube tray*
- Ice cube scoop*

▶ To disassemble components: see the relevant section.
▶ Clean the components.

8.4.5 Cleaning the HydroBreeze*

Cleaning is required in the following cases:

❑ Initial operation
❑ HydroBreeze is off for more than 48 hours.
❑ Refill the water tank.

Ensure that the following conditions are met:

❑ HydroBreeze is off (see HydroBreeze*) .
❑ Water tank has been removed and cleaned in the dishwasher.

▶ Wipe out the recess with a damp cloth.
▶ Insert the water tank.
▶ Activate the HydroBreeze.

8.4.6 Cleaning the IceMaker*

There are various options for cleaning the IceMaker.

Cleaning is required in the following cases:

❑ Initial operation
❑ If out of use for more than 5 days.*

Ensure that the following conditions are met:

❑ IceMaker drawer is emptied.
❑ IceMaker drawer is in place.
❑ The IceMaker is activated. (see 6.2 Control concept)

First use or after a long period of non-use

Clean the IceMaker with the TubeClean function.

▶ Place a 1.5 l empty container (max. height 10 cm) into the drawer under the IceMaker.
▶ Activate the TubeClean function. (see 6.2 Control concept)
▷ The rinse process is prepared (max. 60 min.): Symbol flashes.
▷ Water pipes are rinsed: Symbol flashes.
▷ Rinsing process is complete: Function turns off automatically.
▶ Remove the IceMaker drawer and remove the container.
▶ Clean the IceMaker drawer with warm water and a little detergent.
▶ Push the IceMaker drawer in.
▷ The system starts making ice cubes automatically.
▶ Dispose of any ice cubes that were made 24 hours after the first ice cubes.

If cleaning is required

Clean the IceMaker by hand.

▶ Remove the IceMaker drawer and clean with warm water and a little detergent.
▶ Push the IceMaker drawer in.
▷ The system starts making ice cubes automatically.

8.4.7 After cleaning

▶ Wipe the appliance and the components dry.
▶ Connect and switch on the appliance.
▶ Activate SuperFrost (see 6.3 Functions) .
The temperature is cold enough:
▶ Place the food inside.
▶ Repeat cleaning regularly.

9 Customer help

9.1 Technical specifications

Temperature range	
Cooling*	3 °C to 9 °C*
BioFresh*	0 °C to 3 °C*
Freeze	-26 °C to -15 °C

Maximum freezing quantity/24 h	
Freezer compartment	See “Freezing capacity .../24 h” on the type plate

Maximum component capacity			
Features	Appliance width 550 mm (see installation instructions, appliance dimensions)	Appliance width 600 mm (see installation instructions, appliance dimensions)	Appliance width 700 mm (see installation instructions, appliance dimensions)
Partial pull-out freezer compartment* (see 7.6.1 Drawer on telescopic rails) *	12 kg*	15 kg*	--*

Maximum size baking tray*	
Width	466 mm
Depth	386 mm
Height	50 mm

Ice cube production with IceMaker*	
Ice cube production/24 h	At a temperature of -18 °C: 1.2 kg of ice cubes
Maximum ice cube production/24 h	With the MaxIce function on: 1.5 kg of ice cubes

Time required to reach various temperatures with VarioTemp		
Initial temperature	Target temperature	Time required to reach target temperature
-18 °C	0 °C	>8 h
-18 °C	8 °C	>12 h
8 °C	14 °C	>6 h
14 °C	-18 °C	>4 h

Lighting	
Class[1]	Light source
This product contains one or more energy efficiency class G light sources.	LED

1 The appliance may contain light sources with different energy efficiency classes. The lowest energy efficiency class is indicated.

9.2 Operating noises

The appliance makes different noises when it is on.

- At **higher temperatures** the appliance uses less energy but works for longer. It is **quieter**.
- At **lower temperatures** the food is cooled faster. It is **louder**.

  Examples:
  - Functions on (see 6.3 Functions)
  - Fan running
  - Food recently added
  - High ambient temperature
  - Door open for a while

Noise	Possible cause	Type of noise
Bubbling and splashing	Coolant flowing into the cooling circuit.	Normal operating noise
Hissing	Coolant sprays into the cooling circuit.	Normal operating noise
Humming	The appliance is cooling. The volume depends on the cooling output.	Normal operating noise
Suction noises	Soft-closing door is being opened and closed.	Normal operating noise

Noise	Possible cause	Type of noise
Humming and rustling	The fan is running.	Normal operating noise
Clicking	Components are switched on and off.	Normal switching noise
Rattling or humming	Valves or flaps are working.	Normal switching noise

Noise	Possible cause	Type of noise	Lifting
Vibration	Improper setup	Defective noise	Level the appliance using the adjustable feet.
Rattling	Components, items inside the appliance	Defective noise	Secure components. Leave enough space between the items.

9.3 Technical fault

Your appliance is designed and built to ensure it works reliably and has a long service life. In the unlikely event that a fault occurs during operation, please check whether it is due to an operating error. If so, you will be charged for the callout and repair costs even if it falls within the warranty period.

You can fix the following faults yourself.

9.3.1 Appliance function

Defect	Cause	Remedy
The appliance is not working.	→ The appliance is not switched on.	▶ Switch the appliance on.
	→ The power plug is not properly plugged into the socket.	▶ Check the power plug.
	→ There is something wrong with the power outlet fuse.	▶ Check the fuse.
	→ Power cut	▶ Keep the appliance closed. ▶ Protecting food: Lay freezer packs on top of the food or use another freezer if the power is off for a prolonged period. ▶ Do not re-freeze defrosted food,
	→ The appliance plug does not fit the appliance properly.	▶ Check the appliance plug.
Temperature is not cold enough.	→ The appliance door is not closed properly.	▶ Close the appliance door.
	→ Not enough ventilation.	▶ Keep ventilation grille clear, and clean it.
	→ The ambient temperature is too high.	▶ Solution: (see 1.3 Appliance range of use) .

Defect	Cause	Remedy
	→ The appliance was opened too many times or for too long.	▶ Wait to see if the required temperature corrects itself. If not, contact Customer Service (see 9.4 Customer Services) .
	→ Too much fresh food was placed inside without SuperFrost.	▶ Solution: (see SuperFrost)
	→ The temperature is set incorrectly.	▶ Turn down the temperature and check after 24 hours.
	→ The appliance is too close to a heat source (oven, radiator, etc).	▶ Move the appliance or the heat source.
The door seal is defective or needs to be replaced for another reason.	→ The door seal can be replaced. It can be replaced without the need for special tools.	▶ Contact Customer Services (see 9.4 Customer Services) .
The appliance builds up too much ice or condensation.	→ The door seal may have slipped out of its groove.	▶ Check that the door seal is well fitted in the groove.
The appliance is hot to touch on the outside*.	→ The heat of the refrigeration circuit is used to avoid condensation.	▶ This is normal.

9.3.2 Features

Defect	Cause	Remedy
You cannot activate the IceMaker.*	→ The appliance and therefore the IceMaker are not connected.	▶ Connect the appliance (see the Installation Guide).
The IceMaker is not producing ice cubes.*	→ The IceMaker is not on.	▶ Activate the IceMaker.
	→ The drawer of the IceMakers is not connected properly.	▶ Push the drawer in correctly.
	→ The water connection is not open.	▶ Open the water connection.*
HydroBreeze is not keeping refrigerated goods moist.*	→ The HydroBreeze is not on.	▶ Activate the HydroBreeze.
	→ There is not enough water in the water tank.	▶ Fill the water tank.
	→ There is dirt in front of the concentrator.	▶ Clean the HydroBreeze.
	→ The water tank is not clicked into place properly.	▶ Click the water tank into place.
	→ The cover of the Fruit & Vegetable-Safe is in “low air moisture” mode.	▶ Set the Fruit & Vegetable-Safe to the “high air moisture” mode.
The internal light does not come on.	→ The appliance is not switched on.	▶ Switch the appliance on.
	→ The door was open for longer than 15 minutes.	▶ Interior lighting turns off automatically after approx. 15 min. with the door open.
	→ The LED interior light is faulty or the lid is damaged.	▶ Contact customer service (see 9.4 Customer Services) .

9.4 Customer Services

First check if you can fix the error yourself (see 9 Customer help) . If you can't, contact Customer Services.

Please refer to the enclosed “Liebherr-Service” brochure for the address.

WARNING
Unprofessional repair!
Injuries.
- ▶ Have any repairs and action - not expressly specified - on the appliance and mains cable carried out by service personnel only. (see 8 Maintenance)
- ▶ A damaged mains cable may only be replaced by the manufacturer, the manufacturer's Customer Service or a similarly qualified person.
- ▶ In the case of appliances with an IEC connector, the change may be made by the customer.

9.4.1 Contact Customer Services

Make sure you have the following appliance data at the ready:

- ❑ Appliance name (model and index)
- ❑ Service no. (Service)
- ❑ Serial no. (S no.)

▶ Look up the appliance information on the display (see Info) .

-or-

▶ Referring to appliance info on the nameplate (see 9.5 Model plate) .

▶ Note down the appliance information.
▶ Notify Customer Services of the following: Give us the appliance data.
▷ This will help us to provide you with a faster, more accurate service.
▶ Follow any further instructions given by Customer Services.

9.5 Model plate

The model plate is behind the drawers on the inside of the appliance.

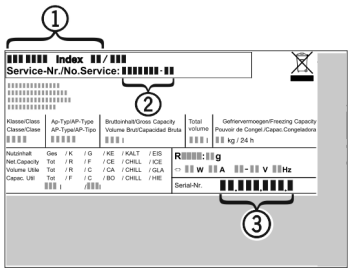

Fig. 67

(1) Appliance description **(3)** Serial no.
(2) Service no.

▶ Note the data on the model plate.

10 Shutting down

▶ Empty the appliance.
▶ Turn off the IceMaker .*
▶ Turn off the appliance .
▶ Remove mains connector.
▶ Remove appliance connector if required: Remove and move from left to right at the same time.
▶ Clean the appliance (see 8.4 Cleaning the appliance) .
▶ Leave the door open to avoid bad smells building up.

11 Disposal

11.1 Preparing appliance for disposal

Li-Ion

Liebherr uses batteries in some of its appliances. In the EU, for environmental reasons, legislation obliges the end user to remove these batteries before disposing of old appliances. If your appliance contains batteries, a corresponding notice is attached.

Lamps — If you can remove the lamps yourself without destroying them, also remove these before disposal.

▶ Take the appliance out of operation.
▶ Appliances with batteries: remove the batteries. For description, see **Maintenance** chapter.
▶ If possible: remove lamps without destroying them.

11.2 Disposing of the appliance in an environmentally friendly manner



The appliance still contains valuable materials and must be disposed of separately from unsorted municipal waste.





Dispose of batteries separately from the old appliance. To do this, you can return the batteries free of charge to retailers as well as recycling centres and collection centres for recyclable materials.

Lamps — Dispose of removed lamps via the respective collection systems.

For Germany: — You can dispose of the appliance free of charge via the class 1 collection containers at the local recycling and recyclable material collection centres. When purchasing a new fridge/freezer, if the sales area > 400 m^2, retailers will also take back the old appliance free of charge.

WARNING
Leaking coolant and oil!
Fire. The coolant contained in the appliance is eco-friendly, but also flammable. The oil contained in the appliance is flammable. Escaping coolant and oil can ignite if the concentration is high enough and in contact with an external heat source.
▶ Do not damage the pipelines of the coolant circuit and the compressor.

▶ Transport the appliance without damaging it.
▶ Dispose of batteries, lamps and the appliance according to the above specifications.



home.liebherr.com/fridge-manuals

EN fridge/freezer with BioFresh

Issue date: 20230511

Part number index: 7080470-00

Liebherr-Hausgeräte Marica EOOD
Bezirk Plovdiv
4202 Radinovo
Bulgarien