Electrolux

electrolux.com/register

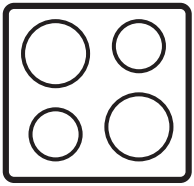

EHF6140ISK

EN User Manual | **Hob**

WE'RE THINKING OF YOU

Thank you for purchasing an Electrolux appliance. You've chosen a product that brings with it decades of professional experience and innovation. Ingenious and stylish, it has been designed with you in mind. So whenever you use it, you can be safe in the knowledge that you'll get great results every time.
Welcome to Electrolux.
Visit our website to:



Get usage advice, brochures, trouble shooter, service and repair information:
www.electrolux.com/support



Register your product for better service:
www.registerelectrolux.com



Buy Accessories, Consumables and Original spare parts for your appliance:
www.electrolux.com/shop

CUSTOMER CARE AND SERVICE

Always use original spare parts.
When contacting our Authorised Service Centre, ensure that you have the following data available: Model, PNC, Serial Number.
The information can be found on the rating plate.

⚠ Warning / Caution-Safety information

ⓘ General information and tips

Environmental information

Subject to change without notice.

CONTENTS

1. SAFETY INFORMATION..... 2
2. SAFETY INSTRUCTIONS..... 5
3. INSTALLATION.....7
4. PRODUCT DESCRIPTION.....9
5. DAILY USE.....9
6. HINTS AND TIPS..... 10
7. CARE AND CLEANING..... 11
8. TROUBLESHOOTING..... 11
9. TECHNICAL DATA..... 12
10. ENERGY EFFICIENCY.....12
11. ENVIRONMENTAL CONCERNS.....13

1. ⚠ SAFETY INFORMATION

Before the installation and use of the appliance, carefully read the supplied instructions. The manufacturer is not responsible for any injuries or damage that are the result of incorrect

installation or usage. Always keep the instructions in a safe and accessible location for future reference.

1.1 Children and vulnerable people safety

- This appliance can be used by children aged from 8 years and above and persons with reduced physical, sensory or mental capabilities or lack of experience and knowledge if they have been given supervision or instruction concerning the use of the appliance in a safe way and understand the hazards involved. Children of less than 8 years of age and persons with very extensive and complex disabilities shall be kept away from the appliance unless continuously supervised.
- Children should be supervised to ensure that they do not play with the appliance.
- Keep all packaging away from children and dispose of it appropriately.
- WARNING: The appliance and its accessible parts become hot during use. Keep children and pets away from the appliance when in use and when cooling down.
- If the appliance has a child safety device, it should be activated.
- Children shall not carry out cleaning and user maintenance of the appliance without supervision.

1.2 General Safety

- This appliance is for cooking purposes only.
- This appliance is designed for single household domestic use in an indoor environment.
- This appliance may be used in, offices, hotel guest rooms, bed & breakfast guest rooms, farm guest houses and other similar accommodation where such use does not exceed (average) domestic usage levels.
- WARNING: The appliance and its accessible parts become hot during use. Care should be taken to avoid touching heating elements.

- WARNING: Unattended cooking on a hob with fat or oil can be dangerous and may result in fire.
- Never use water to extinguish the cooking fire. Switch off the appliance and cover flames with e.g. a fire blanket or lid.
- WARNING: The appliance must not be supplied through an external switching device, such as a timer, or connected to a circuit that is regularly switched on and off by a utility.
- CAUTION: The cooking process has to be supervised. A short term cooking process has to be supervised continuously.
- WARNING: Danger of fire: Do not store items on the cooking surfaces.
- Metallic objects such as knives, forks, spoons and lids should not be placed on the hob surface since they can get hot.
- Do not use the appliance before installing it in the built-in structure.
- Do not use a steam cleaner to clean the appliance.
- If the glass ceramic surface / glass surface is cracked, switch off the appliance and unplug it from the mains. In case the appliance is connected to the mains directly using junction box, remove the fuse to disconnect the appliance from power supply. In either case contact the Authorised Service Centre.
- If the supply cord is damaged, it must be replaced by the manufacturer, an authorized Service or similarly qualified persons in order to avoid a hazard.
- WARNING: Use only hob guards designed by the manufacturer of the cooking appliance or indicated by the manufacturer of the appliance in the instructions for use as suitable or hob guards incorporated in the appliance. The use of inappropriate guards can cause accidents.

2. SAFETY INSTRUCTIONS

2.1 Installation

⚠ WARNING!

Only a qualified person must install this appliance.

⚠ WARNING!

Risk of injury or damage to the appliance.

- Remove all the packaging.
- Do not install or use a damaged appliance.
- Follow the installation instructions supplied with the appliance.
- Keep the minimum distance from other appliances and units.
- Always take care when moving the appliance as it is heavy. Always use safety gloves and enclosed footwear.
- Seal the cut surfaces of the cabinet with a sealant to prevent moisture from causing swelling.
- Protect the bottom of the appliance from steam and moisture.
- Do not install the appliance next to a door or under a window. This prevents hot cookware from falling from the appliance when the door or the window is opened.
- If the appliance is installed above drawers make sure that the space, between the bottom of the appliance and the upper drawer is sufficient for air circulation.
- The bottom of the appliance can get hot. Make sure to install a separation panel made from plywood, kitchen carcass material or other non-flammable materials under the appliance to prevent access to the bottom.
- The separation panel has to cover the area under the hob completely.

2.2 Electrical Connection

⚠ WARNING!

Risk of fire and electric shock.

- All electrical connections should be made by a qualified electrician.
- The appliance must be earthed.
- Before carrying out any operation make sure that the appliance is disconnected from the power supply.
- Make sure that the parameters on the rating plate are compatible with the electrical ratings of the mains power supply.
- Make sure the appliance is installed correctly. Loose and incorrect electricity mains cable or plug (if applicable) can make the terminal become too hot.
- Use the correct electricity mains cable.
- Do not let the electricity mains cable tangle.
- Make sure that a shock protection is installed.
- Use the strain relief clamp on the cable.
- Make sure the mains cable or plug (if applicable) does not touch the hot appliance or hot cookware, when you connect the appliance to a socket.
- Do not use multi-plug adapters and extension cables.
- Make sure not to cause damage to the mains plug (if applicable) or to the mains cable. Contact our Authorised Service Centre or an electrician to change a damaged mains cable.
- The shock protection of live and insulated parts must be fastened in such a way that it cannot be removed without tools.
- Connect the mains plug to the mains socket only at the end of the installation. Make sure that there is access to the mains plug after the installation.
- If the mains socket is loose, do not connect the mains plug.
- Do not pull the mains cable to disconnect the appliance. Always pull the mains plug.
- Use only correct isolation devices: line protecting cut-outs, fuses (screw type fuses removed from the holder), earth leakage trips and contactors.
- The electrical installation must have an isolation device which lets you disconnect the appliance from the mains at all poles. The isolation device must have a contact opening width of minimum 3 mm.

2.3 Use

⚠ WARNING!

Risk of injury, burns and electric shock.

- Do not change the specification of this appliance.
- Remove all the packaging, labelling and protective film (if applicable) before first use.
- Make sure that the ventilation openings are not blocked.
- Do not let the appliance stay unattended during operation.
- Set the cooking zone to “off” after each use.
- Do not put cutlery or saucepan lids on the cooking zones. They can become hot.
- Do not operate the appliance with wet hands or when it has contact with water.
- Do not use the appliance as a work surface or as a storage surface.
- If the surface of the appliance is cracked, disconnect immediately the appliance from the power supply. This to prevent an electrical shock.
- When you place food into hot oil, it may splash.

⚠ WARNING!

Risk of fire and explosion

- Fats and oil when heated can release flammable vapours. Keep flames or heated objects away from fats and oils when you cook with them.
- The vapours that very hot oil releases can cause spontaneous combustion.
- Used oil, that can contain food remnants, can cause fire at a lower temperature than oil used for the first time.
- Do not put flammable products or items that are wet with flammable products in, near or on the appliance.

⚠ WARNING!

Risk of damage to the appliance.

- Do not keep hot cookware on the control panel.
- Do not put a hot pan cover on the glass surface of the hob.
- Do not let cookware boil dry.
- Be careful not to let objects or cookware fall on the appliance. The surface can be damaged.
- Do not activate the cooking zones with empty cookware or without cookware.
- Do not put aluminium foil on the appliance.
- Cookware made of cast iron, aluminium or with a damaged bottom can cause scratches on the glass / glass ceramic. Always lift these objects up when you have to move them on the cooking surface.

2.4 Care and cleaning

⚠ WARNING!

Do not remove the buttons, knobs or gaskets from the control panel. Water may get inside the appliance and cause damage.

- Clean the appliance regularly to prevent the deterioration of the surface material.
- Switch off the appliance and let it cool down before cleaning.
- Do not use water spray and steam to clean the appliance.
- Clean the appliance with a moist soft cloth. Use only neutral detergents. Do not use abrasive products, abrasive cleaning pads, solvents or metal objects.

2.5 Service

- To repair the appliance contact the Authorised Service Centre. Use original spare parts only.
- Concerning the lamp(s) inside this product and spare part lamps sold separately: These lamps are intended to withstand extreme physical conditions in household appliances, such as temperature, vibration, humidity, or are intended to signal information about the operational status of the appliance. They are not intended to be used in other applications and are not suitable for household room illumination.

2.6 Disposal

⚠ WARNING!

Risk of injury or suffocation.

- Contact your local authority for information on how to dispose of the appliance.
- Disconnect the appliance from the mains supply.
- Cut off the mains electrical cable close to the appliance and dispose of it.

3. INSTALLATION

⚠ WARNING!

Refer to Safety chapters.

3.1 Before the installation

Before you install the hob, write down the information below from the rating plate. The rating plate is on the bottom of the hob.

Serial number .....

3.2 Built-in hobs

Only use the built-in hobs after you assemble the hob into correct built-in units and work surfaces that align to the standards.

3.3 Connection cable

- For a single phase or two phase connection, use the cable type: H03V2V2-F or H05BB-F which withstands a temperature of 90 °C or higher.
- To replace the damaged mains cable, use the cable: H03V2V2-F or H05BB-F which withstands a temperature of 90 °C or higher. Contact an Authorised Service Centre. The connection cable may only be replaced by a qualified electrician.

3.4 Assembly

If you install the hob under a hood, please see the installation instructions of the hood for the minimum distance between the appliances.

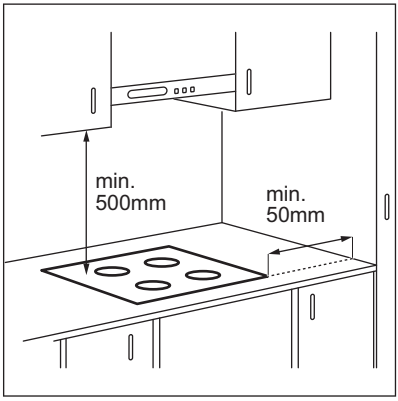

Combination with standard oven

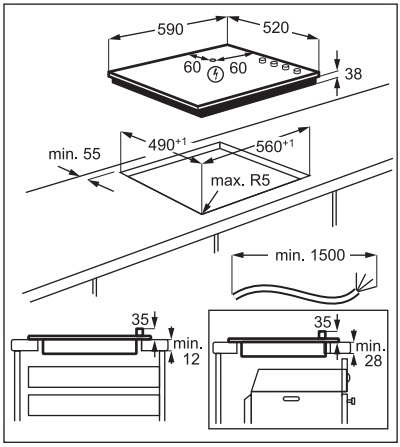

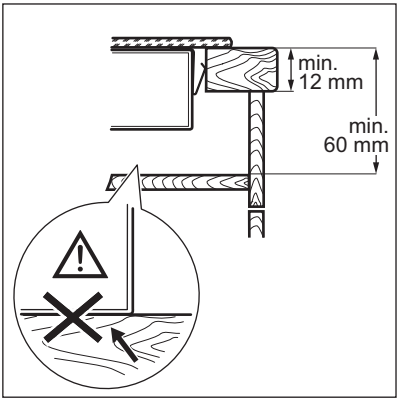

Combination with double oven

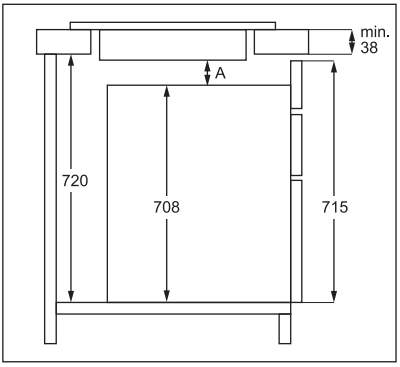

A = min. 6 mm, for double ovens from AEG, Electrolux and Zanussi.

A = min. 12 mm, for double ovens from other brands.

Find the video tutorial "How to install your Electrolux Radiant Hob - Worktop installation" by typing out the full name indicated in the graphic below.

YouTube **www.youtube.com/electrolux**
www.youtube.com/aeg

How to install your Electrolux Radiant Hob - Worktop installation

3.5 Protection box

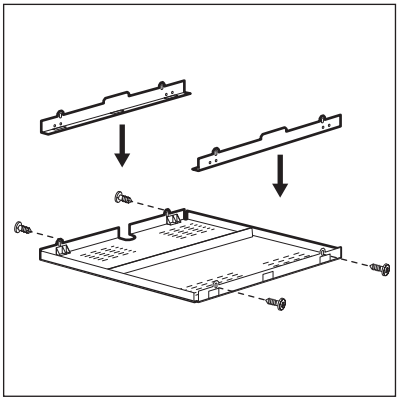

If you use a protection box (an additional accessory), the protective floor directly below the hob is not necessary. The protection box accessory may not be available in some countries. Contact Customer Support Service.

ⓘ

You cannot use the protection box if you install the hob above an oven.

4. PRODUCT DESCRIPTION

4.1 Cooking surface layout

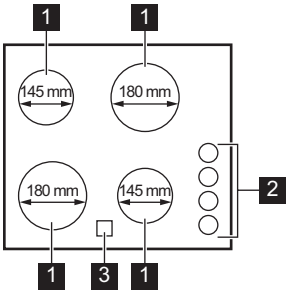

1 Cooking zone
2 Control knobs
3 Residual heat indicator

4.2 Control knob

Symbol	Function
0	Off position
1 - 12	Heat settings

4.3 Residual heat indicator

⚠ WARNING!

As long as the indicator is on, there is a risk of burns from residual heat.

The indicator appears when a cooking zone is hot, but it does not function if mains power is disconnected.

The indicator may also appear:

- for the neighbouring cooking zones even if you are not using them,
- when hot cookware is placed on cold cooking zone,
- when the hob is deactivated but the cooking zone is still hot.

The indicator disappears when the cooking zone has cooled down.

5. DAILY USE

⚠ WARNING!

Refer to Safety chapters.

5.1 The heat setting

To set or change the heat setting turn the knob to the correct heat setting. To deactivate turn the knob to off position.

6. HINTS AND TIPS

⚠ WARNING!

Refer to Safety chapters.

6.1 Cookware

- The bottom of the cookware must be as thick and flat as possible.
- Ensure pan bases are clean and dry before placing on the hob surface.
- In order to avoid scratches, do not slide or rub the pot across the ceramic glass.

ⓘ

Cookware made of enamelled steel and with aluminium or copper bottoms can cause a colour change on the glass-ceramic surface.

6.2 Examples of cooking applications

ⓘ

The data in the table is for guidance only.

Heat setting	Use to:	Time (min)	Hints
1	Keep cooked food warm.	as necessary	Put a lid on the cookware.
1 - 3	Hollandaise sauce, melt: butter, chocolate, gelatine.	5 - 25	Mix from time to time.
1 - 3	Solidify: fluffy omelettes, baked eggs.	10 - 40	Cook with a lid on.
4 - 6	Simmer rice and milkbased dishes, heat up ready-cooked meals.	25 - 50	Add at least twice as much liquid as rice, mix milk dishes halfway through the procedure.
4 - 6	Steam vegetables, fish, meat.	20 - 45	Add a couple of tablespoons of liquid.
5 - 7	Steam potatoes.	20 - 60	Use max. ¼ l of water for 750 g of potatoes.
5 - 7	Cook larger quantities of food, stews and soups.	60 - 150	Up to 3 l of liquid plus ingredients.
8 - 9	Gentle fry: escalope, veal cordon bleu, cutlets, rissoles, sausages, liver, roux, eggs, pancakes, doughnuts.	as necessary	Turn halfway through.
10 - 11	Heavy fry, hash browns, loin steaks, steaks.	5 - 15	Turn halfway through.
11 - 12	Boil water, cook pasta, sear meat (goulash, pot roast), deep-fry chips.		

7. CARE AND CLEANING

⚠ WARNING!
Refer to Safety chapters.

7.1 General information

- Clean the hob after each use.
- Always use cookware with a clean base.
- Scratches or dark stains on the surface have no effect on how the hob operates.
- Use a special cleaner suitable for the surface of the hob.
- Use a special scraper for the glass.

7.2 Cleaning the hob

- **Remove immediately:** melted plastic, plastic foil, sugar and food with sugar, otherwise, the dirt can cause damage to the hob. Take care to avoid burns. Use a special hob scraper on the glass surface at an acute angle and move the blade on the surface.
- **Remove when the hob is sufficiently cool:** limescale rings, water rings, fat stains, shiny metallic discoloration. Clean the hob with a moist cloth and a non-abrasive detergent. After cleaning, wipe the hob dry with a soft cloth.
- **Remove shiny metallic discoloration:** use a solution of water with vinegar and clean the glass surface with a cloth.

8. TROUBLESHOOTING

⚠ WARNING!
Refer to Safety chapters.

8.1 What to do if...

Problem	Possible cause	Remedy
You cannot activate or operate the hob.	The hob is not connected to an electrical supply or it is connected incorrectly.	Check if the hob is correctly connected to the electrical supply.
	The fuse is blown.	Make sure that the fuse is the cause of the malfunction. If the fuse is blown again and again, contact a qualified electrician.
Residual heat indicator does not come on.	The zone is not hot because it operated only for a short time or the sensor is damaged.	If the zone operated sufficiently long to be hot, speak to an Authorised Service Centre.

8.2 If you cannot find a solution...

If you cannot find a solution to the problem yourself, contact your dealer or an Authorised Service Centre. Give the data from the rating plate. Give also three digit letter code for the glass ceramic (it is in the corner of the glass surface). Make sure, you operated the hob correctly. If not the servicing by a service technician or dealer will not be free of charge, also during the warranty period. The information about guarantee period and Authorised Service Centres are in the guarantee booklet.

9. TECHNICAL DATA

9.1 Rating plate

Model EHF6140ISK
Typ 60 PAD 52 AO

Ser.Nr. .....
ELECTROLUX

PNC 949 492 231 01
220 - 240 V / 400 V 2N, 50 - 60 Hz
Made in: Romania
6.0 kW

9.2 Cooking zones specification

Cooking zone	Nominal Power (Max heat setting) [W]	Cooking zone diameter [mm]
Left front	1800	180
Left rear	1200	145
Right front	1200	145
Right rear	1800	180

For optimal cooking results use cookware no larger than the diameter of the cooking zone.

10. ENERGY EFFICIENCY

10.1 Product Information according to EU and UK Ecodesign Regulations

Model identification		EHF6140ISK
Type of hob		Built-In Hob
Number of cooking zones		4
Heating technology		Radiant Heater
Diameter of circular cooking zones (Ø)	Left front Left rear Right front Right rear	18.0 cm 14.5 cm 14.5 cm 18.0 cm
Energy consumption per cooking zone (EC electric cooking)	Left front Left rear Right front Right rear	184.8 Wh/kg 183.0 Wh/kg 183.0 Wh/kg 175.8 Wh/kg
Energy consumption of the hob (EC electric hob)		181.7 Wh/kg

IEC / EN 60350-2, BS EN 60350-2 - Household electric cooking appliances - Part 2: Hobs - Methods for measuring performance.

10.2 Energy saving

You can save energy during everyday cooking if you follow below hints.

- When you heat up water, use only the amount you need.
- If it is possible, always put the lids on the cookware.
- Before you activate the cooking zone put the cookware on it.
- The cookware bottom should have the same diameter as the cooking zone.
- Put the smaller cookware on the smaller cooking zones.
- Put the cookware directly in the centre of the cooking zone.
- Use the residual heat to keep the food warm or to melt it.

11. ENVIRONMENTAL CONCERNS

Recycle materials with the symbol . Put the packaging in relevant containers to recycle it. Help protect the environment and human health by recycling waste of electrical and electronic appliances. Do not dispose of appliances marked with the symbol with the household waste. Return the product to your local recycling facility or contact your municipal office.

electrolux.com

867366950-C-082023

