DCK731110M

EN **User Manual**
Built-In Double Oven

USER MANUAL

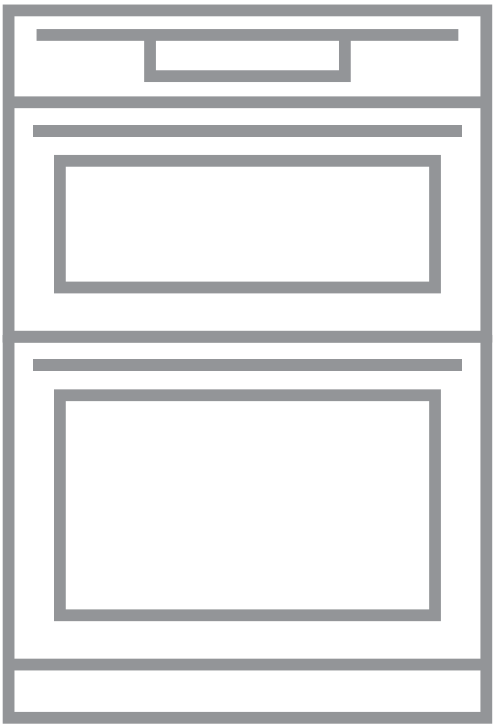

AEG

CONTENTS

1. SAFETY INFORMATION....2
2. SAFETY INSTRUCTIONS....4
3. PRODUCT DESCRIPTION....7
4. CONTROL PANEL....7
5. BEFORE FIRST USE....9
6. DAILY USE....9
7. CLOCK FUNCTIONS....12
8. USING THE ACCESSORIES....14
9. ADDITIONAL FUNCTIONS....15
10. HINTS AND TIPS....17
11. CARE AND CLEANING....25
12. TROUBLESHOOTING....27
13. ENERGY EFFICIENCY....29

FOR PERFECT RESULTS

Thank you for choosing this AEG product. We have created it to give you impeccable performance for many years, with innovative technologies that help make life simpler features you might not find on ordinary appliances. Please spend a few minutes reading to get the very best from it.
Visit our website for:



Get usage advice, brochures, trouble shooter, service information:
www.aeg.com/webselfservice



Register your product for better service:
www.registeraeg.com



Buy Accessories, Consumables and Original spare parts for your appliance:
www.aeg.com/shop

CUSTOMER CARE AND SERVICE

Always use original spare parts.
When contacting our Authorised Service Centre, ensure that you have the following data available: Model, PNC, Serial Number.
The information can be found on the rating plate.

⚠ Warning / Caution-Safety information

ⓘ General information and tips

Environmental information

Subject to change without notice.

1. ⚠ SAFETY INFORMATION

Before the installation and use of the appliance, carefully read the supplied instructions. The

manufacturer is not responsible for any injuries or damages that are the result of incorrect installation or usage. Always keep the instructions in a safe and accessible location for future reference.

1.1 Children and vulnerable people safety

- This appliance can be used by children aged from 8 years and above and persons with reduced physical, sensory or mental capabilities or lack of experience and knowledge if they have been given supervision or instruction concerning the use of the appliance in a safe way and understand the hazards involved.
- Do not let children play with the appliance.
- Keep all packaging away from children and dispose of it appropriately.
- Keep children and pets away from the appliance when it operates or when it cools down. Accessible parts are hot.
- If the appliance has a child safety device, this should be activated.
- Children shall not carry out cleaning and user maintenance of the appliance without supervision.
- Children aged 3 years and under must be kept away from this appliance when it is in operation at all times.

1.2 General Safety

- Only a qualified person must install this appliance and replace the cable.
- This appliance is intended to be used in household and by non-expert users in similar applications such as:
  - By clients in hotels, motels, bed and breakfast and other residential type environments.
- WARNING: The appliance and its accessible parts become hot during use. Care should be taken to avoid touching heating elements. Children less than 8 years of age shall be kept away unless continuously supervised.

- Always use oven gloves to remove or put in accessories or ovenware.
- Before carrying out any maintenance, disconnect the appliance from the power supply.
- Ensure that the appliance is switched off before replacing the lamp to avoid the possibility of electric shock.
- Do not use a steam cleaner to clean the appliance.
- Do not use harsh abrasive cleaners or sharp metal scrapers to clean the glass door since they can scratch the surface, which may result in shattering of the glass.
- If the mains power supply cable is damaged, it must be replaced by the manufacturer, its Authorised Service Centre or similarly qualified persons to avoid an electrical hazard.
- To remove the shelf supports first pull the front of the shelf support and then the rear end away from the side walls. Install the shelf supports in the opposite sequence.
- The means for disconnection must be incorporated in the fixed wiring in accordance with the wiring rules.

2. SAFETY INSTRUCTIONS

2.1 Installation

WARNING!
Only a qualified person must install this appliance.

- Remove all the packaging.
- Do not install or use a damaged appliance.
- Follow the installation instruction supplied with the appliance.
- Always take care when moving the appliance as it is heavy. Always use safety gloves and enclosed footwear.
- Do not pull the appliance by the handle.
- Keep the minimum distance from the other appliances and units.
- Make sure that the appliance is installed below and adjacent safe structures.
- The sides of the appliance must stay adjacent to appliances or to units with the same height.
- The appliance is equipped with an electric cooling system. It must be operated with the electric power supply.

2.2 Electrical connection

WARNING!
Risk of fire and electrical shock.

- All electrical connections should be made by a qualified electrician.
- The appliance must be earthed.
- Make sure that the parameters on the rating plate are compatible with the electrical ratings of the mains power supply.

- Always use a correctly installed shockproof socket.
- Do not use multi-plug adapters and extension cables.
- Make sure not to cause damage to the mains plug and to the mains cable. Should the mains cable need to be replaced, this must be carried out by our Authorised Service Centre.
- Do not let mains cables touch or come near the appliance door, especially when the door is hot.
- The shock protection of live and insulated parts must be fastened in such a way that it cannot be removed without tools.
- Connect the mains plug to the mains socket only at the end of the installation. Make sure that there is access to the mains plug after the installation.
- If the mains socket is loose, do not connect the mains plug.
- Do not pull the mains cable to disconnect the appliance. Always pull the mains plug.
- Use only correct isolation devices: line protecting cut-outs, fuses (screw type fuses removed from the holder), earth leakage trips and contactors.
- The electrical installation must have an isolation device which lets you disconnect the appliance from the mains at all poles. The isolation device must have a contact opening width of minimum 3 mm.
- This appliance complies with the E.E.C. Directives.

2.3 Use

WARNING!
Risk of injury, burns and electrical shock or explosion.

- Do not change the specification of this appliance.
- Make sure that the ventilation openings are not blocked.
- Do not let the appliance stay unattended during operation.
- Deactivate the appliance after each use.
- Be careful when you open the appliance door while the appliance is in operation. Hot air can release.
- Do not operate the appliance with wet hands or when it has contact with water.
- Do not apply pressure on the open door.
- Do not use the appliance as a work surface or as a storage surface.
- Open the appliance door carefully. The use of ingredients with alcohol can cause a mixture of alcohol and air.
- Do not let sparks or open flames to come in contact with the appliance when you open the door.
- Do not put flammable products or items that are wet with flammable products in, near or on the appliance.

WARNING!
Risk of damage to the appliance.

- To prevent damage or discoloration to the enamel:
  - do not put ovenware or other objects in the appliance directly on the bottom.
  - do not put aluminium foil directly on the bottom of cavity of the appliance.
  - do not put water directly into the hot appliance.
  - do not keep moist dishes and food in the appliance after you finish the cooking.
  - be careful when you remove or install the accessories.
- Discoloration of the enamel or stainless steel has no effect on the performance of the appliance.
- Use a deep pan for moist cakes. Fruit juices cause stains that can be permanent.
- This appliance is for cooking purposes only. It must not be used for other purposes, for example room heating.
- Always cook with the oven door closed.
- If the appliance is installed behind a furniture panel (e.g. a door) make sure the door is never closed when the appliance is in operation. Heat and moisture can build up behind a closed furniture panel and cause subsequent damage to the appliance, the housing unit or the floor. Do not close the furniture panel until the

appliance has cooled down completely after use.

2.4 Care and cleaning



WARNING!
Risk of injury, fire, or damage to the appliance.

- Before maintenance, deactivate the appliance and disconnect the mains plug from the mains socket.
- Make sure the appliance is cold. There is the risk that the glass panels can break.
- Replace immediately the door glass panels when they are damaged. Contact the Authorised Service Centre.
- Be careful when you remove the door from the appliance. The door is heavy!
- Clean regularly the appliance to prevent the deterioration of the surface material.
- Clean the appliance with a moist soft cloth. Only use neutral detergents. Do not use any abrasive products, abrasive cleaning pads, solvents or metal objects.
- If you use an oven spray, follow the safety instruction on it's packaging.
- Do not clean the catalytic enamel (if applicable) with any kind of detergent.

2.5 Internal light

- The type of light bulb or halogen lamp used for this appliance is only for household appliances. Do not use it for house lighting.



WARNING!
Risk of electrical shock.

- Before replacing the lamp, disconnect the appliance from the power supply.
- Only use lamps with the same specifications.

2.6 Disposal



WARNING!
Risk of injury or suffocation.

- Disconnect the appliance from the mains supply.
- Cut off the mains electrical cable close to the appliance and dispose of it.
- Remove the door catch to prevent children or pets from becoming trapped in the appliance.

2.7 Service

- To repair the appliance contact an Authorised Service Centre.
- Use original spare parts only.

3. PRODUCT DESCRIPTION

3.1 General overview

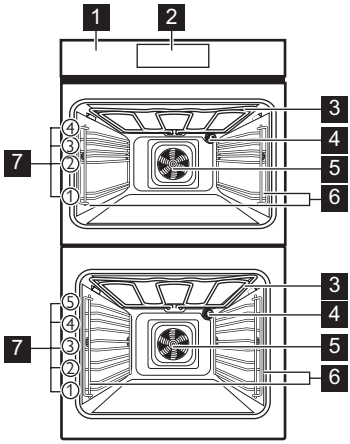

1 Control panel
2 Electronic programmer
3 Heating element
4 Lamp
5 Fan
6 Shelf support, removable
7 Shelf positions

3.2 Accessories

- **Wire shelf**
  For cookware, cake tins, roasts.
- **Grill- / Roasting pan**
  To bake and roast or as pan to collect fat.
- **Trivet**
  For roasting and grilling.

  Use the trivet only with the Grill- / roasting pan.
- **Telescopic runners**
  For shelves and trays.

4. CONTROL PANEL

4.1 Electronic programmer

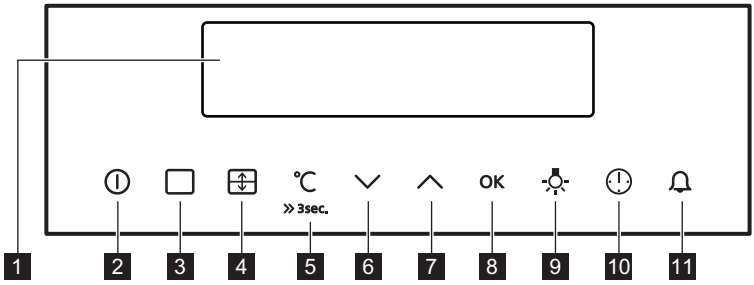

Use the sensor fields to operate the appliance.

	Sensor Field	Function	Description
1	-	DISPLAY	Shows the current settings of the appliance.

	Sensor Field	Function	Description
2		ON / OFF	To activate and deactivate the appliance.
3		OPTIONS	To set an oven function or a cleaning function.
4		OVEN SELECTION	To switch between top and main oven.
5	°C >> 3sec	TEMPERATURE / FAST HEAT UP	To set and see the cavity temperature or the core temperature sensor temperature (if present). If you press and hold it for three seconds, it turns the Fast heat up function ON or OFF. Straight access to the temperature setting of the first oven function when the appliance is off.
6		DOWN	To move down in the menu.
7		UP	To move up in the menu.
8	OK	OK	To confirm the selection or setting. To move down in the menu.
9		OVEN LIGHT	To activate or deactivate the oven lamp.
10		CLOCK	To set the clock functions.
11		MINUTE MINDER	To set the Minute Minder.

4.2 Display

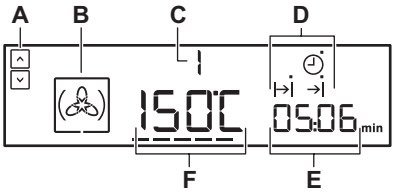

A. Top / Main oven indicator
B. Oven function symbol
C. Number of the oven function / programme
D. Indicators for the clock functions (refer to the table "Clock functions")
E. Clock / residual heat display
F. Temperature / time of day display

Other indicators of the display:

Symbol	Name	Description
h / min	**h / min**	A clock function operates.
___	**Heat-up / residual heat indicator**	Shows the temperature level in the appliance.
	Temperature / fast heat up	The function operates.
	Temperature	You can examine or change the temperature.
	Minute minder	The minute minder function operates.

4.3 Heat up indicator

If you activate an oven function, the bars ___ come on in the display. The bars show that the temperature in the appliance increases or decreases.

When the appliance is at the set temperature, the bars go off the display.

5. BEFORE FIRST USE

WARNING!
Refer to Safety chapters.

To set the Time of day refer to "Clock functions" chapter.

5.1 Initial Cleaning

Remove all accessories and removable shelf supports from the appliance.

Refer to "Care and cleaning" chapter.

Clean the appliance and the accessories before first use.
Put the accessories and the removable shelf supports back to their initial position.

6. DAILY USE

WARNING!
Refer to Safety chapters.

6.1 Selecting an oven

1. To switch on the appliance press ⏻.
2. Repeatedly press ⇳ until the top / main oven indicator appears on the display.

6.2 Top oven functions

Oven function		Application
	True Fan Cooking	To bake on 1 shelf positions at the same time and to dry food.
	Pizza Setting	To bake food on 1 shelf position for a more intensive browning and a crispy bottom.
	Slow Cooking	To prepare tender, succulent roasts.
	Turbo Grilling	To roast larger meat joints or poultry with bones on one shelf position. Also to make gratins and to brown.
	Grilling	To grill flat food and to toast bread.
	Defrost	This function can be used for defrosting frozen foods, such as vegetables and fruits. The defrosting time depends on the amount and size of the frozen food.
	Bottom Heat	To bake cakes with crispy bottom and to preserve food.
	Catalysis	To help the self-cleaning catalytic oven layer.



The lamp may automatically deactivate at a temperature below 60 °C during some oven functions.

6.3 Main oven functions

Oven function		Application
	True Fan Cooking	To bake on up to 3 shelf positions at the same time and to dry food. Set the temperature 20 - 40 °C lower than for Conventional Cooking.
	Pizza Setting	To bake food on 1 shelf position for a more intensive browning and a crispy bottom. Set the temperature 20 - 40 °C lower than for Conventional Cooking.

Oven function		Application
	Slow Cooking	To prepare tender, succulent roasts.
	Conventional Cooking(Top / Bottom Heat)	To bake and roast food on one shelf position.
	Turbo Grilling	To roast larger meat joints or poultry with bones on one shelf position. Also to make gratins and to brown.
	Grilling	To grill flat food and to toast bread.
	Keep Warm	To keep food warm.
	Defrost	This function can be used for defrosting frozen foods, such as vegetables and fruits. The defrosting time depends on the amount and size of the frozen food.
	Bottom Heat	To bake cakes with crispy bottom and to preserve food.
	Catalysis	To help the self-cleaning catalytic oven layer.

The lamp may automatically deactivate at a temperature below 60 °C during some oven functions.

6.4 Setting the oven function

1. Activate the appliance with ⏻ or ☐. The display shows the set temperature, the symbol and the number of the oven function.
2. Touch ∧ or ∨ to set an oven function.
3. Touch OK or the appliance starts automatically after five seconds.

If you activate the appliance and do not set an oven function or programme, the appliance deactivates automatically after 20 seconds.

6.5 Changing the temperature

Touch ∧ or ∨ to change the temperature in steps of 5 °C.
When the appliance is at the set temperature, an acoustic signal sounds three times and the Heat up indicator goes out.

6.6 Checking the temperature

You can see the temperature in the appliance when the function or programme operates.

1. Touch °C ».
The Temperature / Time display shows the temperature in the appliance.
2. Touch OK to go back to the set temperature or the display shows it automatically after five seconds.

6.7 Fast heat up function

Do not put food in the oven when the Fast heat up function operates.

The Fast heat up function is not available with every oven function. An acoustic signal sounds if the Fast heat up function is not available for the set function if Faulty tone is activated in the settings menu. Refer to "Using the settings menu".

The Fast heat up function decreases the heat up time.

To activate the Fast heat up function touch and hold °C » for more than three seconds.
If you activate the Fast heat up function, the bars on the display ___ flash one by one and » comes on to show that the function operates.

7. CLOCK FUNCTIONS

7.1 Clock functions table

Clock function		Application
	TIME OF DAY	To show or change the time of day. You can change the time of day only when the appliance is on.
|→|	DURATION	To set how long the appliance operates.
→|	END	To set when the appliance deactivates.
|→|→|	TIME DELAY	To combine DURATION and END function.
	MINUTE MINDER	To set a countdown time. This function has no effect on the operation of the oven. You can set the MINUTE MINDER at any time and also when the appliance is off.
00:00	COUNT UP TIMER	To set the count up, which shows how long the appliance operates. This function has no effect on the operation of the appliance. It is on immediately when the oven starts to heat. The COUNT UP TIMER is not activated if DURATION and END are set.

7.2 Setting and changing the time

After the first connection to the mains, wait until the display shows h and **12:00**. "**12**" flashes.

1. Touch ∧ or ∨ to set the hours.
2. Touch OK or ⏲.
3. Touch ∧ or ∨ to set the minutes.
4. Touch OK or ⏲.

The display shows the new time.
To change the time of day touch ⏲ again and again until ◷ starts to flash.

7.3 Setting the DURATION

1. Set an oven function and temperature.
2. Touch ⏲ again and again until |→| starts to flash.

3. Use ∧ or ∨ to set the minutes for DURATION time.
4. Touch OK or the DURATION time starts automatically after 5 seconds.
5. Use ∧ or ∨ to set the hours for DURATION time.
6. Touch OK. The DURATION time starts automatically after 5 seconds.

When the set time ends, an acoustic signal sounds for 2 minutes. |→| and time setting flash in the display. The appliance deactivates.

7. Touch a sensor field or open the oven door to stop the acoustic signal.
8. Turn off the appliance.

7.4 Setting the END

1. Set an oven function and temperature.
2. Touch ⏲ again and again until →| starts to flash.
3. Use ∧ or ∨ to set the END and OK or ⏲ to confirm. First you set the minutes and then the hours.

When the set time ends, an acoustic signal sounds for 2 minutes. →| and the time setting flash in the display. The appliance deactivates automatically.

4. Touch a sensor field or open the oven door to stop the acoustic signal.
5. Turn off the appliance.

7.5 Setting the TIME DELAY function

1. Set an oven function and temperature.
2. Touch ⏲ again and again until |→| starts to flash.
3. Use ∧ or ∨ to set the minutes for DURATION.
4. Touch OK.
5. Use ∧ or ∨ to set the hours for DURATION.
6. Touch OK, the appliance switches to the setting of the END function.

The display shows flashing →|.

7. Use ∧ or ∨ to set the END and OK or ⏲ to confirm. First you set the minutes and then the hours.

Appliance turns on automatically later on, works for the set DURATION time and stops at the set END time. At the set time an acoustic signal sounds for 2 minutes. →| and the time setting flash in the display. The appliance deactivates automatically.

8. Touch a sensor field or open the oven door to stop the acoustic signal.
9. Turn off the appliance.

ⓘ When the Time delay function is activated, the display shows a static symbol of the oven function, |→| with a dot and →|. The dot shows which clock function is on in the Clock / residual heat display.

7.6 Setting the MINUTE MINDER

1. Touch 🔔.

🔔 and "00" flash in the display.

2. Use 🔔 to switch between options. First you set the seconds, then the minutes and the hours.
3. Use ∧ or ∨ to set the MINUTE MINDER and 🔔 to confirm.
4. Touch OK or the MINUTE MINDER starts automatically after 5 seconds.

When the set time ends, an acoustic signal sounds for 2 minutes and 00:00 and 🔔 flash in the display.

5. Touch a sensor field or open the oven door to stop the acoustic signal.

7.7 COUNT UP TIMER

1. To reset the Count Up Timer, touch ⏲ again and again until ⏱ flashes in the display.
2. Touch ∨ until the display shows "00:00" and the Count Up Timer starts to count up again.

8. USING THE ACCESSORIES

WARNING!
Refer to Safety chapters.

8.1 Inserting the accessories

Wire shelf:

Push the shelf between the guide bars of the shelf support and make sure that the feet point down.

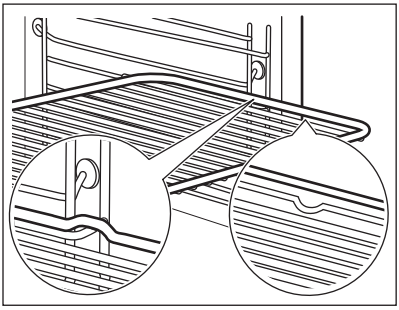

Deep pan:

Push the deep pan between the guide bars of the shelf support.

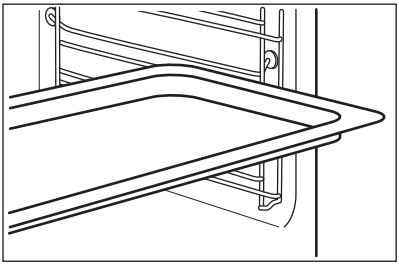

Wire shelf and deep pan together:

Push the deep pan between the guide bars of the shelf support and the wire shelf on the guide bars above.

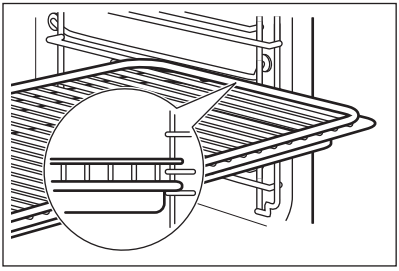

Small indentation at the top increase safety. The indentations are also anti-tip devices. The high rim around the shelf prevents cookware from slipping of the shelf.

8.2 Telescopic runners - inserting the accessories

With the telescopic runners you can put in and remove the shelves more easily.

CAUTION!
Do not clean the telescopic runners in the dishwasher. Do not lubricate the telescopic runners.

CAUTION!
Make sure you push back the telescopic runners fully in the appliance before you close the oven door.

Wire shelf:

Put the wire shelf on the telescopic runners so that the feet point downwards.

The high rim around the wire shelf is a special device to prevent the cookware from slipping.

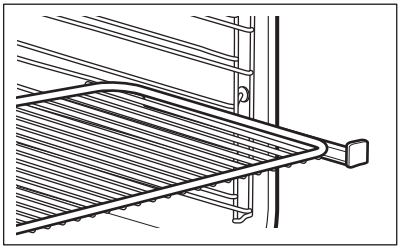

Deep pan:

Put the deep pan on the telescopic runners.

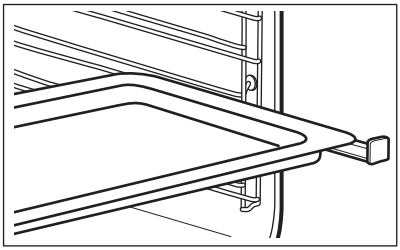

Wire shelf and deep pan together:

Place the wire shelf and the deep pan together on the telescopic runner.

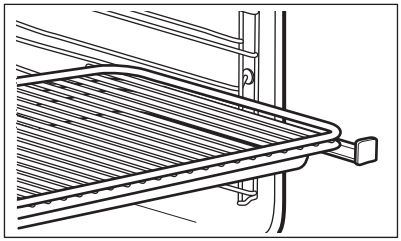

8.3 Trivet and Grill- / Roasting pan

WARNING!
Be careful when you remove the accessories from a hot appliance. There is a risk of burns.

You can use the trivet to roast larger pieces of meat or poultry on one shelf position.

1. Put the trivet into the deep pan so that the supports of the wire shelf point up.

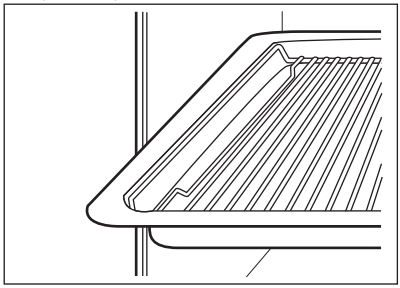

2. Put the deep pan into the oven on the necessary shelf position.

You can use the trivet to grill flat dishes in large quantities and to toast.

1. Put the trivet into the deep pan so that the supports of the wire shelf point down.

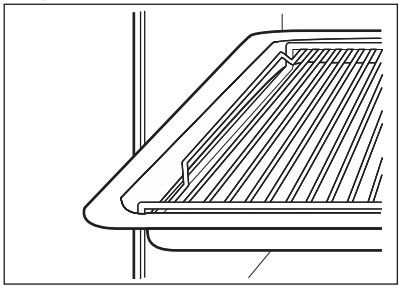

2. Put the deep pan into the oven on the necessary shelf position.

9. ADDITIONAL FUNCTIONS

9.1 Using the Function Lock

You can activate the function only when the appliance operates.

The Function Lock prevents an accidental change of the oven function.

1. To activate the function activate the appliance.
2. Activate an oven function or setting.
3. Touch and hold ⏻ and ∨ at the same time for 2 seconds.

An acoustic signal sounds.
Loc comes on in the display.

To deactivate the Function Lock repeat step 3.

You can deactivate the appliance when the Function Lock is on. When you deactivate the appliance, the Function Lock deactivates.

9.2 Using the settings menu

The settings menu lets you activate or deactivate functions in the main menu.

The display shows SET and the number of the setting.

	Description	Value to set
1	RESIDUAL HEAT INDICATOR	ON / OFF
2	KEY TONE[1)]	CLICK / BEEP / OFF
3	FAULTY TONE	ON / OFF
4	SERVICE MENU	-
5	RESTORE SETTINGS	YES / NO

[1)] It is not possible to deactivate the tone of the ON / OFF sensor field.

1. When the appliance is activated, touch ☐ then touch it again and hold for three seconds.

The display shows SET1 and "1" flashes.

2. Touch ∧ or ∨ to set the setting.
3. Touch OK.
4. Touch ∧ or ∨ to change the value of the setting.
5. Touch OK.

To exit the Settings menu, touch ⏻ or touch and hold ☐.

9.3 Automatic Switch-off

For safety reasons the appliance deactivates automatically after some time if an oven function operates and you do not change any settings.

Temperature (°C)	Switch-off time (h)
30 - 115	12.5
120 - 195	8.5
200 - 245	5.5
250 - maximum	1.5

After the Automatic switch-off, touch a sensor field to operate the appliance again.

The Automatic switch-off does not work with the functions: Light, Slow Cooking, Duration, End, Time delay.

9.4 Brightness of the display

There are two modes of display brightness:

- Night brightness - when the appliance is deactivated, the brightness of the display is lower between 10 PM and 6 AM.
- Day brightness:
  - when the appliance is activated.
  - if you touch a sensor field during the night brightness (apart from ON / OFF), the display goes back to the day brightness mode for the next 10 seconds.
  - if the appliance is deactivated and you set the Minute Minder. When the Minute Minder function ends, the display goes back to the night brightness.

9.5 Cooling fan

When the appliance operates, the cooling fan activates automatically to keep the surfaces of the appliance cool. If you deactivate the appliance, the cooling fan can continue to operate until the appliance cools down.

10. HINTS AND TIPS

WARNING!
Refer to Safety chapters.

The temperature and baking times in the tables are guidelines only. They depend on the recipes and the quality and quantity of the ingredients used.

10.1 Double oven

Top oven
The top oven is the smaller of the two ovens. It has 4 shelf positions. Use it to cook smaller quantities of food. It gives especially good results when used to cook fruitcakes, sweets and savoury flans or quiche.

Main oven
The main oven is the bigger of the two ovens. It is particularly suitable for cooking larger quantities of food.

10.2 Baking

- Your oven may bake or roast differently to the appliance you had before. Adapt your usual settings such as temperature, cooking time and shelf position to the values in the tables.
- Use the lower temperature the first time.
- If you cannot find the settings for a special recipe, look for the similar one.
- You can extend baking times by 10 – 15 minutes if you bake cakes on more than one shelf position.
- Cakes and pastries at different heights do not always brown equally at first. If this occurs, do not change the temperature setting. The differences equalize during the baking procedure.
- Trays in the oven can twist during baking. When the trays become cold again, the distortions disappear.

10.3 Tips on baking

Baking results	Possible cause	Remedy
The bottom of the cake is not browned sufficiently.	The shelf position is incorrect.	Put the cake on a lower shelf.
The cake sinks and becomes soggy, lumpy or streaky.	The oven temperature is too high.	The next time you bake, set a slightly lower oven temperature.
The cake sinks and becomes soggy, lumpy or streaky.	The baking time is too short.	Set a longer baking time. **You cannot decrease baking times by setting higher temperatures.**
The cake sinks and becomes soggy, lumpy or streaky.	There is too much liquid in the mixture.	Use less liquid. Be careful with mixing times, especially if you use a mixing machine.
The cake is too dry.	The oven temperature is too low.	The next time you bake, set a higher oven temperature.

Baking results	Possible cause	Remedy
The cake is too dry.	The baking time is too long.	The next time you bake, set a shorter baking time.
The cake browns unevenly.	The oven temperature is too high and the baking time is too short.	Set a lower oven temperature and a longer baking time.
The cake browns unevenly.	The mixture is unevenly distributed.	Spread the mixture evenly on the baking tray.
The cake is not ready in the baking time given.	The oven temperature is too low.	The next time you bake, set a slightly higher oven temperature.

10.4 Baking

Top oven

Food	Temperature (°C)	Time (min)	Shelf position
Biscuits	170 - 190	10 - 20	2
Bread	200 - 220	30 - 35	1
Bread rolls / buns	170-180	10 - 15	1
Cakes:			
- Small & Queen	160 - 170	18 - 25	2
- Sponges	160 - 175	20 - 30	2
- Victoria Sandwich	160 - 170	18 - 25	2
- Madeira	140 - 150	75 - 90	2
- Rich Fruit	140 - 150	120 - 150	2
- Gingerbread	140 - 150	75 - 90	2
- Meringues	90 - 100	150 - 180	2
- Flapjack	160 - 170	25 - 30	2
- Shortbread	130 - 150	45 - 65	2
Casseroles:			
- Beef / Lamb	160 - 170	150 - 180	1
- Chicken	160 - 180	75 - 90	1
Convenience Foods	Follow manufacturer's instructions.		
Fish	170 - 190	20 - 30	2
Fish Pie (Potato Topped)	190 - 200	20 - 30	2

Food	Temperature (°C)	Time (min)	Shelf position
Fruit Pies, Crumbles	190 - 200	30 - 50	2
Milk Puddings	150 - 170	90 - 120	2
Pasta, Lasagne etc.	170 - 180	40 - 50	2
Pastry:			
- Choux	180 - 190	30 - 40	2
- Eclairs, Profiteroles	180 - 190	30 - 40	2
- Flaky / Puff Pies	210 - 220	30 - 40	2
Shortcrust:			
- Mince Pies	190 - 210	15 - 20	2
- Meat Pies	190 - 210	25 - 35	2
- Quiche, Tarts, Flans	180 - 200	25 - 50	2
Scones	220 - 230	8 - 12	2
Shepard's Pie	180 - 190	30 - 40	2
Souffles	190 - 200	20 - 30	2
Vegetables:			
- Baked Jacket Potatoes	180 - 190	60 - 90	2
- Roast Potatoes	180 - 190	60 - 90	2
Yorkshire Pudding:			
- Large	200 - 210	25 - 40	1
- Individual	210 - 220	15 - 25	1

Main oven

Food	Temperature (°C)		Time (min)	Shelf position
	Conventional Cooking	True Fan Cooking		
Biscuits	180 - 190	180 - 190	10 - 20	2
Bread	200 - 220	190 - 210	30 - 35	2
Cakes:				
- Small & Queen	170 - 180	160 - 170	18 - 25	2
- Sponges	170 - 180	160 - 170	20 - 25	2
- Madeira	150 - 160	140 - 160	60 - 75	2
- Rich Fruit	140 - 150	130 - 140	120 - 150	2

Food	Temperature (°C)		Time (min)	Shelf position
	Conventional Cooking	True Fan Cooking		
- Christmas	140 - 150	130 - 140	180 - 270	2
Fish	170 - 180	160 - 180	20 - 30	3
Fruit Pies, Crumbles	180 - 200	170 - 180	30 - 50	3
Milk Puddings	150 - 170	140 - 160	60 - 90	3
Pastry:				
- Choux	180 - 190	180 - 190	30 - 40	3
- Shortcrust	190 - 200	180 - 190	25 - 35	3
- Flaky	190 - 210	180 - 190	30 - 40	3
- Puff	Follow manufacturer's instructions. Reduce the temperature by 20°C for True Fan Cooking Function.			
Plate Tarts	190 - 200	180 - 190	25 - 45	3
Quiches / Flans	200 - 210	170 - 180	25 - 45	3
Scones	220 - 230	210 - 230	8 - 12	2

10.5 Slow Cooking

Use this function to prepare lean, tender pieces of meat and fish. This function is not applicable to such recipes as pot roast or fatty roast pork.

In the first 10 minutes you can set an oven temperature between 80 °C and 150 °C. The default is 90 °C. After the temperature is set, the oven continues to cook at 80 °C. Do not use this function for poultry.

Always cook without a lid when you use this function.

1. Sear the meat in a pan on the hob on a very high setting for 1 - 2 minutes on each side.
2. Put the meat together with the hot roasting pan into the oven on the wire shelf.
3. Select the function Slow Cooking.

Food	Quantity (kg)	Temperature (°C)	Time (min)	Shelf position
Roast beef	1 - 1.5	120	120 - 150	1
Fillet of beef	1 - 1.5	120	90 - 150	3
Roast veal	1 - 1.5	120	120 - 150	1
Steaks	0.2 - 0.3	120	20 - 40	3

10.6 Pizza Setting

Top oven

Food	Temperature (°C)	Time (min)	Shelf position
Apple Pie	160 - 180	160 - 180	1
Plate Tart	160 - 180	25 - 50	1
Pizza	Follow manufacturer's instructions.		1
Quiches / Tarts	160 - 180	25 - 50	1

Main oven

Food	Temperature (°C)	Time (min)	Shelf position
Apple Pie	160 - 180	50 - 60	3
Plate Tart	180 - 200	25 - 50	3
Pizza	Follow manufacturer's instructions.		3
Quiches / Tarts	180 - 200	25 - 50	3

10.7 Roasting

- Use heat-resistant ovenware to roast. Refer to the instructions of the ovenware manufacturer.
- You can roast large roasting joints directly in the deep pan or on the wire shelf above the deep pan.
- Put some liquid in the deep pan to prevent the meat juices or fat from burning on it's surface.
- All types of meat that can be browned or have crackling can be roasted in the roasting tin without the lid.
- If necessary, turn the roast after 1/2 to 2/3 of the cooking time.
- To keep meat more succulent:
  - roast lean meat in the roasting tin with the lid or use roasting bag.
  - roast meat and fish in pieces weighting minimum 1 kg.
  - baste large roasts and poultry with their juices several times during roasting.

10.8 Roasting tables - Main oven

Beef

Food	Quantity	Temperature (°C)	Time (min)	Shelf position
Roast beef or fillet: rare	per cm of thickness	190 - 200[1)]	5 - 6	2
Roast beef or fillet: medium	per cm of thickness	180 - 190[1)]	6 - 8	2
Roast beef or fillet: well done	per cm of thickness	170 - 180[1)]	8 - 10	2

1) Preheat the oven.

Pork

Food	Quantity (kg)	Temperature (°C)	Time (min)	Shelf position
Shoulder, neck, ham	1 - 1.5	160 - 180	90 - 120	2
Pork chop	1 - 1.5	160 - 180	60 - 90	2
Meat loaf	0.75 - 1	160 - 170	45 - 60	2
Knuckle of pork (precooked)	0.75 - 1	150 - 170	90 - 120	2

Veal

Food	Quantity (kg)	Temperature (°C)	Time (min)	Shelf position
Roast veal	1	160 - 180	90 - 120	2
Knuckle of veal	1.5 - 2	160 - 180	120 - 150	2

Lamb

Food	Quantity (kg)	Temperature (°C)	Time (min)	Shelf position
Leg of lamb, roast lamb	1 - 1.5	150 - 170	75 - 120	2
Saddle of lamb	1 - 1.5	160 - 180	60 - 90	2

Game

Food	Quantity (kg)	Temperature (°C)	Time (min)	Shelf position
Saddle of hare, leg of hare	Up to 1 kg	220 - 250	25 - 40	2
Loin of Game	1.5 - 2	210 - 220	75 - 105	1
Leg of Game	1.5 - 2	200 - 210	90 - 135	1

Poultry

Food	Quantity (kg)	Temperature (°C)	Time (min)	Shelf position
Poultry pieces	0.2 - 0.25 each	200 - 220	35 - 50	3
Half chicken	0.4 - 0.5 each	190 - 210	35 - 50	3
Poultry	1 - 1.5	190 - 210	45 - 75	1
Duck	1.5 - 2	180 - 200	75 - 100	1
Goose	3.5 - 5	160 - 180	150 - 210	1

Food	Quantity (kg)	Temperature (°C)	Time (min)	Shelf position
Turkey	2.5 - 3.5	160 - 180	105 - 150	1
Turkey	4 - 6	140 - 160	150 - 240	1

Fish (steamed)

Type of meat	Quantity (kg)	Temperature (°C)	Time (min)	Shelf position
Whole fish	1 - 1.5	210 - 220	40 - 60	1

10.9 Grilling

Always grill with the maximum temperature setting.

Set the shelf into the shelf position as recommended in the grilling table.

For grilling in the top oven adjust the shelf position to suit different thicknesses of food.

Always set the pan to collect the fat into the first shelf position.

Grill only flat pieces of meat or fish.

Always preheat the empty oven with the grill functions for 5 minutes.

CAUTION!
Always grill with the oven door closed.

Grilling and Fast Grilling - Top oven

Food	Time (min)
Bacon Rashers	5 -6
Beefburgers	10 - 20
Chicken Joints	20 - 40
Lamb Chops	15 - 25
Pork Chops	20 - 25
Whole Fish, Trout / Makarel	10 - 12
Fillets, Plaice / Cod	4 - 6
Kebabs	12 - 18
Kidneys, Lamb / Pig	6 - 10
Sausages	20 - 30
Toasted Sandwiches	3 - 4
Steaks:	
- Rare	4 - 6
- Medium	6 - 8

Food	Time (min)
- Well Done	12 - 15

Grilling - Main oven

Food	Temperature (°C)	Time (min)		Shelf position
		1st side	2nd side	
Roast beef	210 - 230	30 - 40	30 - 40	2
Filet of beef	230	20 - 30	20 - 30	3
Back of pork	210 - 230	30 - 40	30 - 40	2
Back of veal	210 - 230	30 - 40	30 - 40	2
Back of lamb	210 - 230	25 - 35	20 - 25	3
Whole Fish, 500 - 1000 g	210 - 230	15 - 30	15 - 30	3 / 4

10.10 Defrost - Main oven

Remove the food packaging and put the food on a plate.

Use the first shelf position from the bottom.

Do not cover the food with a bowl or a plate, as this can extend the defrost time.

Food	Quantity (kg)	Defrosting time (min)	Further defrosting time (min)	Comments
Chicken	1	100 - 140	20 - 30	Put the chicken on an upturned saucer in a big plate. Turn halfway through.
Meat	1	100 - 140	20 - 30	Turn halfway through.
Meat	0.5	90 - 120	20 - 30	Turn halfway through.
Trout	0.15	25 - 35	10 - 15	-
Strawberries	0.3	30 - 40	10 - 20	-
Butter	0.25	30 - 40	10 - 15	-
Cream	2 x 0.2	80 - 100	10 - 15	Whip the cream when still slightly frozen in places.
Gateau	1.4	60	60	-

11. CARE AND CLEANING

WARNING!
Refer to Safety chapters.

11.1 Notes on cleaning

- Clean the front of the appliance with a soft cloth with warm water and a cleaning agent.
- To clean metal surfaces, use a dedicated cleaning agent.
- Clean the appliance interior after each use. Fat accumulation or other food remains may result in a fire. The risk is higher for the grill pan.
- Clean stubborn dirt with a special oven cleaner.
- Clean all accessories after each use and let them dry. Use a soft cloth with warm water and a cleaning agent.
- If you have nonstick accessories, do not clean them using aggressive agents, sharp-edged objects or a dishwasher. It can cause damage to the nonstick coating.

11.2 Stainless steel or aluminium appliances

Clean the oven door with a damp cloth or sponge only. Dry it with a soft cloth. Do not use steel wool, acids or abrasive materials as they can damage the oven surface. Clean the oven control panel with the same precautions.

11.3 Removing the shelf supports

To clean the oven, remove the shelf supports.

1. Pull the front of the shelf support away from the side wall.

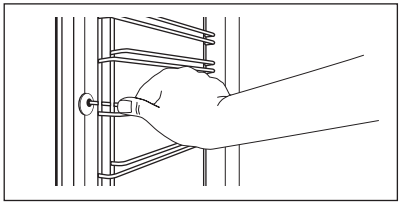

2. Pull the rear end of the shelf support away from the side wall and remove it.

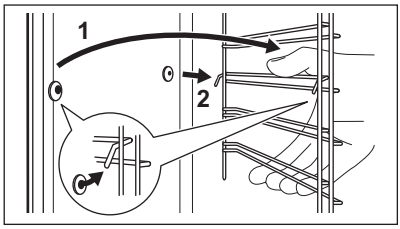

Install the shelf supports in the opposite sequence.

The retaining pins on the telescopic runners must point to the front.

11.4 Catalysis

CAUTION!
Do not clean the catalytic surface with oven sprays, abrasive cleaning agents, soap or other cleaning agents. This will damage the catalytic surface.

Remove all accessories and removable shelf supports.

The walls and the top of the cavity are catalytic-coated. They absorb fat and food particles at high temperature without smell.

To support this self-cleaning process heat the appliance without any food regularly.

Spots or discolouration of the catalytic surface have no effect on catalytic properties.

During the catalytic cleaning the oven lamp is on.

1. Set the Cata cleaning function (refer to "Oven functions"). The display shows "Cata" and the duration of the cleaning procedure (1 hour).
   You cannot set the Duration, but you can use the End function to delay the start of the cleaning procedure.

An acoustic signal sounds after the time ends. The appliance deactivates.

2. Touch a sensor field or open the oven door to stop the acoustic signal.
3. Clean the bottom of the appliance with a soft and moist sponge.

11.5 Removing and installing the door

You can remove the door and the internal glass panels to clean it. The number of glass panels is different for different models.

WARNING!
Be careful when you remove the door from the appliance. The door is heavy.

1. Open the door fully.
2. Fully lift up the clamping levers (A) on the two door hinges.

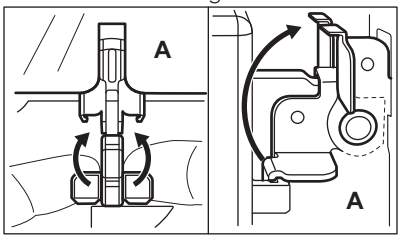

3. Close the door until it is at an angle of approximately 45°.

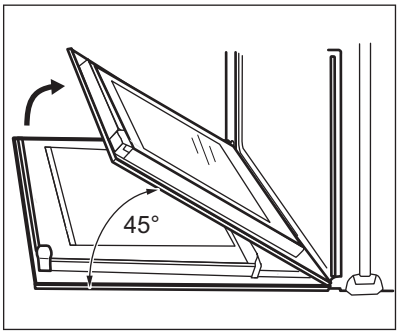

4. Hold the door with one hand on each side and pull it away from the appliance at an upwards angle.
5. Put the door with the outer side down on a soft cloth on a stable surface. This is to prevent scratches.
6. Hold the door trim (B) on the top edge of the door at the two sides and push inwards to release the clip seal.

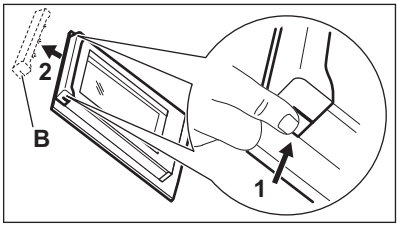

CAUTION!
Rough handling of the glass, especially around the edges of the front panel, can cause the glass to break.

7. Pull the door trim to the front to remove it.
8. Hold the door glass panels on their top edge one by one and pull them up out of the guide.

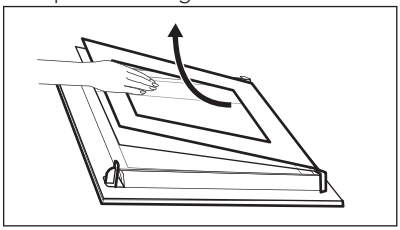

9. Clean the glass panel with water and soap. Dry the glass panel carefully.

When the cleaning is completed, do the above steps in the opposite sequence. Install the smaller panel first, then the larger and the door.

WARNING!
Make sure that the glasses are inserted in the correct position otherwise the surface of the door may overheat.

11.6 Replacing the lamp

Put a cloth on the bottom of the interior of the appliance. It prevents damage to the lamp glass cover and the cavity.

WARNING!
Danger of electrocution!
Disconnect the fuse before you replace the lamp.
The lamp and the lamp glass cover can be hot.

1. Deactivate the appliance.
2. Remove the fuses from the fuse box or deactivate the circuit breaker.

The back lamp

The lamp glass cover is at the back of the cavity.

1. Turn the lamp glass cover counterclockwise to remove it.
2. Clean the glass cover.
3. Replace the oven lamp with a suitable 300 °C heat-resistant oven lamp.
   Use the same oven lamp type.
4. Install the glass cover.

The side lamp

1. Remove the left shelf support to get access to the lamp.
2. Use a narrow, blunt object (e.g. a teaspoon) to remove the glass cover.

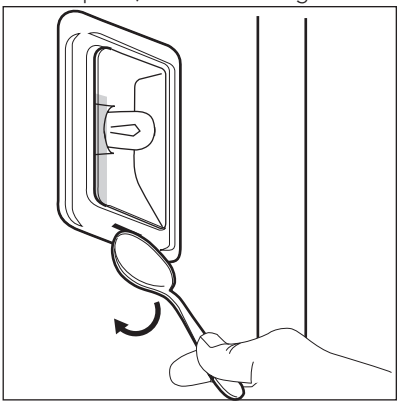

3. Clean the glass cover.
4. Replace the lamp with a suitable 300 °C heat-resistant lamp.
5. Install the glass cover.
6. Install the left shelf support.

12. TROUBLESHOOTING

WARNING!
Refer to Safety chapters.

12.1 What to do if...

Problem	Possible cause	Remedy
The oven does not heat up.	The oven is deactivated.	Activate the oven.
The oven does not heat up.	The clock is not set.	Set the clock.
The oven does not heat up.	The necessary settings are not set.	Make sure that the settings are correct.
The oven does not heat up.	The automatic switch-off is activated.	Refer to "Automatic switch-off".

Problem	Possible cause	Remedy
The oven does not heat up.	The Child Lock is on.	Refer to "Using the Child Lock".
The oven does not heat up.	The fuse is blown.	Make sure that the fuse is the cause of the malfunction. If the fuse is blown again and again, contact a qualified electrician.
The lamp does not operate.	The lamp is defective.	Replace the lamp.
The display does not show the time during the off status.	The display is deactivated.	Touch ⏲ and ∧ at the same time to activate the display again.
It takes too long to cook the dishes or they cook too quickly.	The temperature is too low or too high.	Adjust the temperature if necessary. Follow the advice in the user manual.
Steam and condensation settle on the food and in the cavity of the oven.	You left the dish in the oven for too long.	Do not leave the dishes in the oven for longer than 15 - 20 minutes after the cooking process ends.
The display shows "C3".	The cleaning function does not operate. You did not fully close the door, or the door lock is defective.	Fully close the door.
The display shows an error code that is not in this table.	There is an electrical fault.	• Deactivate the oven with the house fuse or the safety switch in the fuse box and activate it again. • If the display shows the error code again, contact the Customer Care Department.

12.2 Service data

If you cannot find a solution to the problem yourself, contact your dealer or an Authorised Service Centre.

The necessary data for the service centre is on the rating plate. The rating plate is on the front frame of the appliance cavity. Do not remove the rating plate from the appliance cavity.

We recommend that you write the data here:	
Model (MOD.)	.....
Product number (PNC)	.....

We recommend that you write the data here:	
Serial number (S.N.)	.....

13. ENERGY EFFICIENCY

13.1 Product Fiche and information according to EU 65-66/2014

Supplier's name	AEG
Model identification	DCK731110M
Energy Efficiency Index	Top oven: 105.6 Main oven: 106.2
Energy efficiency class	Top oven: A Main oven: A
Energy consumption with a standard load, conventional mode	Top oven: 0.91 Main oven: 0.92 kWh/cycle
Energy consumption with a standard load, fan-forced mode	Top oven: 0.75 kWh/cycle Main oven: 0.86 kWh/cycle
Number of cavities	2
Heat source	Electricity
Volume	Top oven: 39 l Main oven: 61 l
Type of oven	Built-In Oven
Mass	58.4 kg

EN 60350-1 - Household electric cooking appliances - Part 1: Ranges, ovens, steam ovens and grills - Methods for measuring performance.

13.2 Energy saving

The oven contains features which help you save energy during everyday cooking.

General hints
Make sure that the oven door is closed properly when the appliance operates. Do not open the door too often during cooking. Keep the door gasket clean and make sure it is well fixed in its position.

Use metal dishes to improve energy saving.

When possible, do not preheat the oven before you put the food inside.

When the cooking duration is longer than 30 minutes, reduce the oven temperature to minimum 3 - 10 minutes before the end of the cooking time, depending on the duration of the cooking. The residual heat inside the oven will continue to cook.

Use the residual heat to warm up other dishes.

Keep breaks between baking as short as possible when you prepare few dishes at one time.

Cooking with fan
When possible, use the cooking functions with fan to save energy.

Residual heat
If a programme with the Duration or End Time selection is activated and the cooking time is longer than 30 minutes, the heating elements automatically deactivate earlier in some oven functions.

The fan and lamp continue to operate.

Keep food warm
Choose the lowest possible temperature setting to use residual heat and keep a meal warm. The residual heat indicator or temperature appears on the display.

Cooking with the lamp off
Turn off the lamp during cooking. Turn it on only when you need it.

Deactivating the display
You can turn off the display. Press and hold and at the same time. To turn it on repeat this step.

14. ENVIRONMENTAL CONCERNS

Recycle the materials with the symbol . Put the packaging in applicable containers to recycle it. Help protect the environment and human health and to recycle waste of electrical and electronic appliances. Do not dispose appliances marked with the symbol with the household waste. Return the product to your local recycling facility or contact your municipal office.

www.aeg.com/shop



867336359-B-122017

CE

AEG