# DS70S-950WH2

# NEOMOUNTS DS70S-950WH2 MONITOR ARM 17-35" - GAS SPRING - TOPFIX - 180°-STOP

**SPECIFICATIONS**

**GENERAL**

| | |
|---|---|
| Min. screen size* | 17 |
| Max. screen size* | 35 |
| Min. weight | 1 |
| Max. weight | 18 |
| Max. weight curved/ultra-wide | 15 |
| Screens | 2 |
| Curve radius range | 1500R - 4000R |
| Desk mount | Grommet<br>Clamp |
| Distance to wall | 11,9-65,6 cm |
| VESA maximum | 100x100 mm |
| VESA minimum | 75x75 mm |

**FUNCTIE**

| | |
|---|---|
| Type | Full motion |
| Height adjustment | 20,2-52,2 cm |
| Width adjustment | 115,9 cm |
| Depth adjustment | 8,8-62,5 cm |
| Tilt (degrees) | +90°, -90° |
| Swivel (degrees) | +90°, -90° |
| Rotate (degrees) | +180°, -180° |
| Height | 57,9 cm |
| Width | 18,6 cm |
| Depth | 65,6 cm |
| Adjustment type | Gas spring |

**INFORMATION**

| | |
|---|---|
| Series | NEXT One |
| Color | White |
| Main material | Aluminium |
| Warranty | 10 year |

*Please note: The inch sizes stated are just an indication, combined with the weight and VESA sizes. The maximum weight and VESA size are absolute restrictions for the products and should not be exceeded.

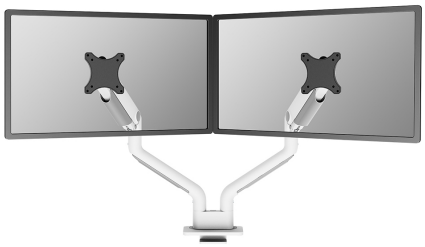

**Neomounts NEXT One DS70S-950WH2 Dual monitor arm - 17-35" - 1-18 kg/screen (curved 15 kg/screen) - gas spring - 180°-stop - Topfix - Easy Install-model - 100% plastic-free packaging - white**

The Neomounts DS70S-950WH2 NEXT One is a full motion desk mount for two screens up to 35". The DS70S-950WH2 is a true all-in one solutions for small to large displays. The NEXT One features a strengthened head to support a higher maximum weight up to 18 kg per screen. The versatile tilt (180°), rotate (360°) and swivel (180°) technology allows the mount to change to any viewing angle to fully benefit from the capabilities of the screen. Additionally, the mount has gas spring height adjustment (20,2-52,2 cm) and depth adjustment (8,8-62,5 cm), to create the perfect working position.

The DS70S-950WH2 features the nifty 180° stop mechanism, that prevents the mount from making contact with the wall or separation panel when installed near it. The smart cable management system ensures orderly routing of the cables.

The black VESA plates of the NEXT One integrate stylishly with the black back of your screens. The DS70S-950WH2 is suitable for screens that meet VESA hole pattern 75x75 or 100x100 mm. For non-standard hole patterns, Neomounts has various optional VESA adapter plates available. The monitor arm is equipped with a Quick-release VESA system and comes with both a topfix clamp and grommet for quick and easy installation.

The packaging of the DS70S-950WH2 desk mount is 100% plastic free and entirely made from cardboard and paper. The NEXT One products have an extended warranty period of 10-years.

Neomounts®

**DS70S-950WH2**

# NEOMOUNTS DS70S-950WH2 MONITOR ARM 17-35" - GAS SPRING - TOPFIX - 180°-STOP

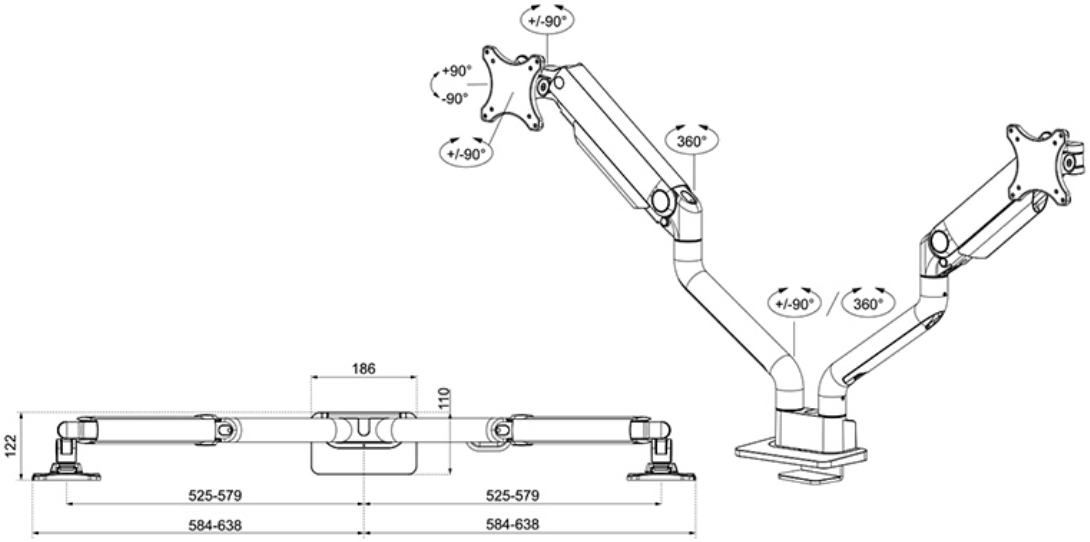


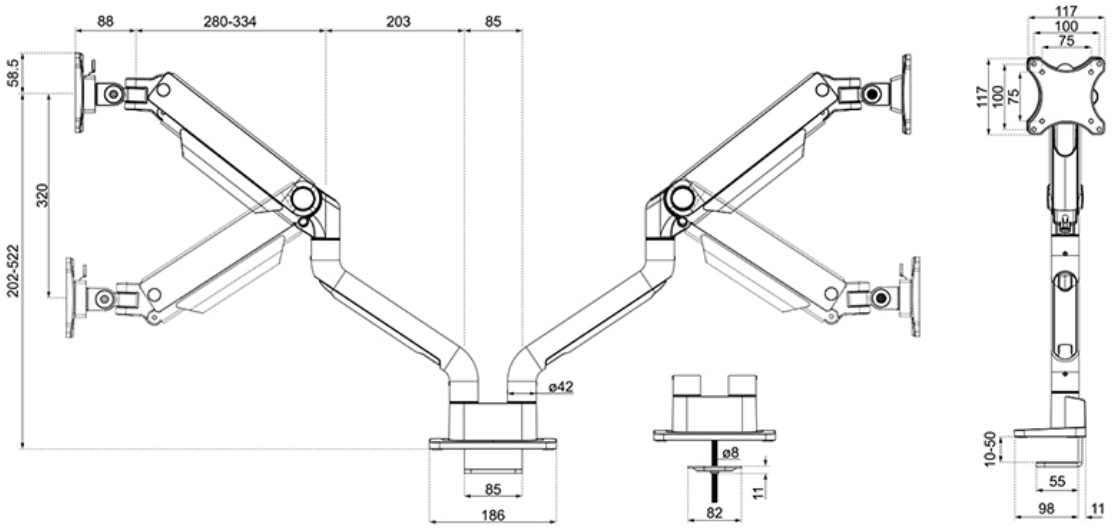


Neomounts