AEG

aeg.com/register

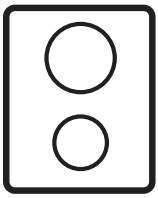

IKX32300CB

EN User Manual | **Hob**

Welcome to AEG! Thank you for choosing our appliance.



In our drive to be sustainable, we are reducing paper assets and provide full user manuals online. Access your full user manual at **aeg.com/manuals**



Get usage advice, brochures, trouble shooter, service and repair information at **aeg.com/support**

1. ⚠ SAFETY INFORMATION

Before the installation and use of the appliance, carefully read the supplied instructions. The manufacturer is not responsible for any injuries or damage that are the result of incorrect installation or usage. Always keep the instructions in a safe and accessible location for future reference.

- This appliance can be used by children aged from 8 years and above and persons with reduced physical, sensory or mental capabilities or lack of experience and knowledge if they have been given supervision or instruction concerning the use of the product in a safe way and understand the hazards involved. Children of less than 8 years of age and persons with very extensive and complex disabilities shall be kept away from the appliance unless continuously supervised.
- Children should be supervised to ensure that they do not play with the appliance.
- Keep all packaging away from children and dispose of it appropriately.
- CAUTION: Keep children and pets away from the appliance when it operates or when it cools down. Accessible parts become hot. If the appliance has a child safety device, it should be activated.
- Children shall not carry out cleaning and user maintenance of the appliance without supervision.
- This appliance is for cooking purposes only.
- This appliance is designed for single household domestic use in an indoor environment.

- This appliance may be used in, offices, hotel guest rooms, bed & breakfast guest rooms, farm guest houses and other similar accommodation where such use does not exceed (average) domestic usage levels.
- CAUTION: The cooking process has to be supervised. A short term cooking process has to be supervised continuously.
- WARNING: The appliance and its accessible parts become hot during use. Care should be taken to avoid touching heating elements.
- WARNING: Unattended cooking on a hob with fat or oil can be dangerous and may result in fire.
- WARNING: Danger of fire: Do not use the appliance as a work surface or as a storage surface.
- WARNING: Use only hob guards designed by the manufacturer of the cooking appliance or indicated by the manufacturer of the appliance in the instructions for use as suitable or hob guards incorporated in the appliance. The use of inappropriate guards can cause accidents.
- WARNING: If the glass ceramic surface / glass surface is cracked, switch off the appliance and unplug it from the mains. In case the appliance is connected to the mains directly using junction box, remove the fuse to disconnect the appliance from power supply. In either case contact the Authorised Service Centre.
- Smoke is an indication of overheating. Never use water to extinguish the cooking fire. Switch off the appliance and cover flames with e.g. a fire blanket or lid.
- CAUTION: The appliance must not be supplied through an external switching device, such as a timer, or connected to a circuit that is regularly switched on and off by a utility.
- If the supply cord is damaged, it must be replaced by the manufacturer, the Authorised Service Centre or similarly qualified persons in order to avoid a hazard.
- Do not place metallic objects such as knives, forks, spoons and lids on the cooking surface since they can get hot.

- Do not put flammable products or items that are wet with flammable products in, near or on the appliance.
- After use, switch off the hob element by its control and do not rely on the pan detector.
- Do not use steam cleaner and water spray to clean the appliance.

2. SAFETY INSTRUCTIONS

2.1 Installation and Electrical Connection

⚠ WARNING!

Only a qualified person must install and connect this appliance.

⚠ WARNING!

Risk of injury, electric shock, fire or damage to the appliance.

Follow the installation instructions supplied with the appliance. Install the appliance in a safe and suitable place that meets installation requirements.

Do not use the appliance before installing it in the built-in structure.

Keep the minimum distance from other appliances and units.

Do not install or use a damaged appliance.

Remove all the packaging.

Always take care when moving the appliance as it is heavy. Always use safety gloves and enclosed footwear.

Protect the bottom of the appliance from steam and moisture. Seal the cut surfaces of the cabinet with a sealant to prevent moisture from causing swelling.

Do not install the appliance next to a door or under a window. This prevents hot cookware from falling from the appliance when the door or the window is opened.

The appliance has cooling fans on the bottom.

If the appliance is installed above a drawer:

- Do not store small pieces or sheets of paper that could be pulled in, to avoid risk of damage the cooling fans or impair the cooling system.
- Keep a distance of minimum 2 cm between the bottom of the appliance and parts stored in the drawer.

Remove any separator panels installed in the cabinet below the appliance.

Before carrying out any operation make sure that the appliance is disconnected from the power supply.

Make sure that the parameters on the rating plate are compatible with the electrical ratings of the mains power supply.

Make sure the appliance is installed correctly. Loose and incorrect electricity mains cable or plug (if applicable) can make the terminal become too hot.

The appliance must be earthed.

Make sure that a shock protection is installed.

Use the correct electricity mains cable. Use the strain relief clamp on the cable.

Do not use multi-plug adapters and extension cables.

Make sure not to cause damage to the mains plug or cable. Do not let the electricity mains cable tangle.

Make sure the mains cable or plug (if applicable) does not touch the hot appliance or hot cookware, when you connect the appliance to a socket nearby.

Connect the mains plug to the mains socket only at the end of the installation. Make sure that there is access to the mains plug after the installation.

The shock protection of live and insulated parts must be fastened in such a way that it cannot be removed without tools.

Do not pull the mains cable to disconnect the appliance, always pull the mains plug. If the mains socket is loose, do not connect the mains plug.

Use only correct isolation devices: line protecting cut-outs, fuses (screw type fuses removed from the holder), earth leakage trips and contactors.

The electrical installation must have an isolation device which lets you disconnect the appliance from the mains at all poles. The isolation device must have a contact opening width of minimum 3 mm.

2.2 Use and Maintenance

⚠ WARNING!

Risk of injury, burns, electric shock, fire, explosion or damage to the appliance.

Do not change the specification of this appliance.

Remove all the packaging, labelling and protective film (if applicable) before first use.

Make sure that the ventilation openings are not blocked.

Do not operate the appliance with wet hands or when it has contact with water.

Users with a pacemaker must keep a distance of minimum 30 cm from the induction cooking zones when the appliance operates.

When you place food into hot oil, it may splash.

Fats and oil, when heated, can release flammable vapours. Keep flames or heated objects away from fats and oils when you cook with them.

The vapours that very hot oil releases can cause spontaneous combustion.

Used oil, that can contain food remnants, can cause fire at a lower temperature than oil used for the first time.

Do not activate the cooking zones with empty cookware or without cookware.

Do not keep hot cookware on the control panel.

Do not put a hot pan cover on the glass surface of the hob.

Do not let cookware boil dry.

Do not use aluminum foil or other materials between the cooking surface and the cookware, unless otherwise specified by the manufacturer of this appliance.

Use only accessories recommended for this appliance by the manufacturer.

Cookware made of cast iron or with a damaged bottom can cause scratches on the glass / glass ceramic. Always lift these objects up when you have to move them on the cooking surface.

Clean the appliance regularly to prevent the deterioration of the surface material.

Deactivate the appliance and let it cool down before cleaning.

Clean the appliance with a moist soft cloth. Use only neutral detergents. Do not use abrasive products, abrasive cleaning pads, solvents or metal objects, unless otherwise specified.

Concerning the lamp(s) inside this product and spare part lamps sold separately: These lamps are intended to withstand extreme physical conditions in household appliances, such as temperature, vibration, humidity, or are intended to signal information about the operational status of the appliance. They are not intended to be used in other applications and are not suitable for household room illumination.

To repair the appliance contact the Authorised Service Centre. Use original spare parts only.

2.3 Disposal

⚠ WARNING!

Risk of injury or suffocation.

Contact your local authority for information on how to dispose of the appliance.

Disconnect the appliance from the mains supply.

Cut off the mains electrical cable close to the appliance and dispose of it.

3. INSTALLATION

3.1 Before the installation

Before you install the hob, write down the information below from the rating plate. The rating plate is on the bottom of the hob.

Serial number .....

3.2 Built-in hobs

Only use the built-in hobs after you assemble the hob into correct built-in units and work surfaces that align to the standards.

3.3 Attaching the seal

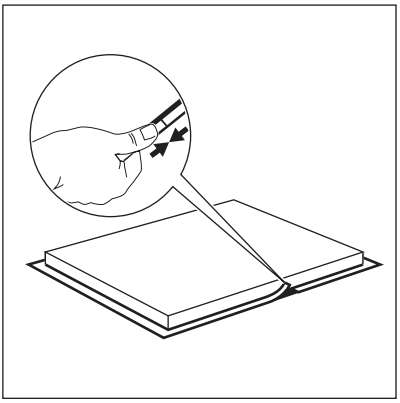

On-top installation

1. Clean the worktop around the cut out area.
2. Attach the supplied 2x6 mm seal stripe to the lower edge of the hob, along the outer edge of the glass ceramic. Do not stretch it. Make sure that the ends of the seal stripe are located in the middle of one side of the hob.
3. Add some millimetres to the length when you cut the seal stripe.
4. Join the two ends of the seal stripe together.

3.4 Assembly

If you install the hob under a hood, please see the installation instructions of the hood for the minimum distance between the appliances.

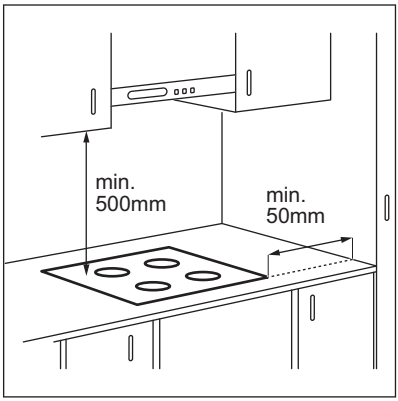

If the appliance is installed above a drawer, the hob ventilation can warm up the items stored in the drawer during the cooking process.

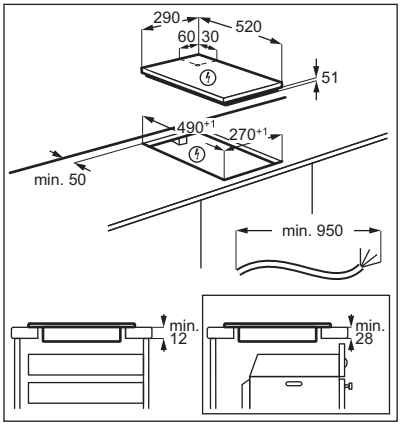

3.5 Installation of more than one hob

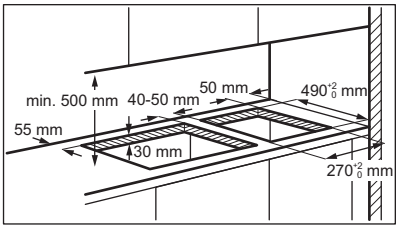

3.6 Connection cable

- The hob is supplied with a connection cable.
- To replace the damaged mains cable, use the cable: H03V2V2-F or H05BB-F which withstands a temperature of 90 °C or higher. Contact an Authorised Service Centre. The connection cable may only be replaced by a qualified electrician.

4. PRODUCT DESCRIPTION

4.1 Cooking surface layout

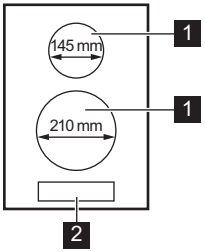

1 Induction cooking zone
2 Control panel

4.2 Symbols on the control panel and the display

For detailed information on the functions refer to the full version of user manual online.

Symbol	Description
⏻	To activate and deactivate the hob.
🔒	To lock / unlock the control panel.
⏸	Pause. To set all cooking zones that operate to the lowest heat setting.
⏲	To select the cooking zone.
− / +	To set a heat setting.
− ⏲ +	To increase or decrease the time.

Symbol	Description
P	PowerBoost. To activate and deactivate the maximum heat setting.
0	The cooking zone is deactivated.
1 - 9	The cooking zone operates. The display shows the current heat setting.
P	The maximum heat setting is activated. PowerBoost operates.
L	The control panel is locked. Lock / Child Safety Device operates.
u	Pause operates.
/ /	OptiHeat Control: continue cooking / keep warm / residual heat. A cooking zone is still hot.
-	Automatic Switch Off operates.
E + digit	There is a malfunction.
F	There is a problem with the cookware.

5. DAILY USE

5.1 Activating and deactivating

Touch ⏻ for 1 second to activate or deactivate the hob.

5.2 The heat setting

Touch + to increase the heat setting. Touch − to decrease the heat setting. Touch + and − at the same time to deactivate the cooking zone.

5.3 Timer

- **Count Down Timer**

You can use this function to set the length of a single cooking session.

First set the heat setting for the cooking zone, then set the function.

To set the cooking zone: touch ⏲ repeatedly until the indicator of a cooking zone appears.

To activate the function or change the time: touch + or − of the timer to set the time (00 - 99 minutes). When the indicator of the cooking zone starts to flash, the time counts down.

To see the remaining time: touch ⏲ to set the cooking zone. The indicator of the cooking zone starts to flash. The display shows the remaining time.

To deactivate the function: touch ⏲ to set the cooking zone and then touch −. The remaining time counts down to **00**. The indicator of the cooking zone disappears.

ⓘ

When the countdown ends, an acoustic signal sounds and **00** flashes. The cooking zone deactivates.

To stop the sound: touch ⏲.

6. CARE AND CLEANING

6.1 General information

- Clean the hob after each use.
- Always use cookware with a clean base.
- Always be careful no to slide or rub the cookware on the edges of the glass as it may chip or damage the glass surface.
- Do not use cookware made of aluminium, copper, brass, glass, ceramic, or porcelain. Cookware made of such materials is incompatible with induction and might leave scratches or permanent stains on the surface of the hob.
- Scratches or dark stains on the surface have no effect on how the hob operates.
- Use a special cleaning agent suitable for the surface of the hob.
- Always use a scraper recommended for hobs with a glass surface. Use the scraper only as an additional tool for cleaning the glass after the standard cleaning procedure.

> ⚠ **WARNING!**
>
> Do not use knives or any other sharp, metal tools to clean the glass surface.

6.2 Cleaning the hob

- **Remove immediately:** melted plastic, plastic foil, salt, sugar and food with sugar, otherwise, the dirt can cause damage to the hob. Take care to avoid burns. Use a special hob scraper on the glass surface at an acute angle and move the blade on the surface.
- **Remove when the hob is sufficiently cool:** limescale rings, water rings, fat stains, shiny metallic discoloration. Clean the hob with a moist cloth and a non-abrasive detergent. After cleaning, wipe the hob dry with a soft cloth.
- **Remove shiny metallic discoloration:** use a solution of water with vinegar and clean the glass surface with a cloth.

7. TROUBLESHOOTING

7.1 What to do if...

> ⓘ
>
> If you cannot find a solution to the problem below, check the full version of user manual online or contact an Authorised Service Centre, if necessary.

Problem	Possible cause	Remedy
You cannot activate or operate the hob.	The hob is not connected to an electrical supply or it is connected incorrectly.	Check if the hob is correctly connected to the electrical supply.
	The fuse is blown.	Make sure that the fuse is the cause of the malfunction. If the fuse is blown again and again, contact a qualified electrician.
	You did not set the heat setting for 10 seconds.	Activate the hob again and set the heat setting in less than 10 seconds.

Problem	Possible cause	Remedy
	You touched 2 or more sensor fields at the same time.	Touch only one sensor field.
	There is water or fat stains on the control panel.	Clean the control panel.
You can hear a constant beep noise.	The electrical connection is incorrect.	Disconnect the hob from the electrical supply. Ask a qualified electrician to check the installation.
An acoustic signal sounds and the hob deactivates. An acoustic signal sounds when the hob is deactivated.	You put something on one or more sensor fields.	Remove the object from the sensor fields.
The heat setting changes between two levels or you cannot select the maximum heat setting for one of the cooking zones.	Power management operates. The other zones consume the maximum available power. Your hob works properly.	Reduce the heat setting of the other cooking zones connected to the same phase. Refer to "Power management" in the full version of user manual online.
The control panel becomes hot to the touch.	The cookware is too large or you put it too close to the control panel.	Put large cookware on the rear zones, if possible.
F comes on.	There is no cookware on the zone.	Put cookware on the zone.
	The cookware is unsuitable.	Use cookware suitable for induction hobs.
	The diameter of the bottom of the cookware is too small for the zone.	Use cookware with correct dimensions. Refer to "Technical data".
E and a number come on.	There is an error in the hob.	Deactivate the hob and activate it again after 30 seconds. If E comes on again, disconnect the hob from the electrical supply. After 30 seconds, connect the hob again. If the problem continues, speak to an Authorised Service Centre.

8. TECHNICAL DATA

8.1 Rating plate

Model IKX32300CB
Typ 61 A2A 00 AA
Induction 3.65 kW
Ser.Nr. .....
AEG

PNC 949 492 769 00
220 - 240 V, 50 - 60 Hz
Made in: Romania
3.65 kW

8.2 Cooking zones specification

Cooking zone	Nominal power (maximum heat setting) [W]	PowerBoost [W]	PowerBoost maximum duration [min]	Cookware diameter [mm]
Middle front	2300	3600	10	180 - 210
Middle rear	1400	2500	4	125 - 145

The power of the cooking zones can be different in some small range from the data in the table. It changes with the material and dimensions of the cookware.

For optimal cooking results use cookware no larger than the diameter in the table.

9. ENERGY EFFICIENCY

9.1 Product Information according to EU and UK Ecodesign Regulations

Model identification		IKX32300CB
Type of hob		Built-In Hob
Number of cooking zones		2
Heating technology		Induction
Diameter of circular cooking zones (Ø)	Middle front Middle rear	21.0 cm 14.5 cm
Energy consumption per cooking zone (EC electric cooking)	Middle front Middle rear	188.9 Wh/kg 183.4 Wh/kg
Energy consumption of the hob (EC electric hob)		186.2 Wh/kg

IEC / EN 60350-2, BS EN 60350-2 - Household electric cooking appliances - Part 2: Hobs - Methods for measuring performance.

9.2 Energy saving

You can save energy during everyday cooking if you follow the hints below.

- When you heat up water, use only the amount you need.
- If it is possible, always put the lids on the cookware.
- Put the cookware directly in the centre of the cooking zone.
- Use the residual heat to keep the food warm or to melt it.

10. ENVIRONMENTAL CONCERNS

Recycle materials with the symbol ♺. Put the packaging in relevant containers to recycle it. Help protect the environment and human health by recycling waste of electrical and electronic appliances. Do not dispose of appliances marked with the symbol with the household waste. Return the product to your local recycling facility or contact your municipal office.

aeg.com

867384821-A-012024

