S2425HS Outline dimension
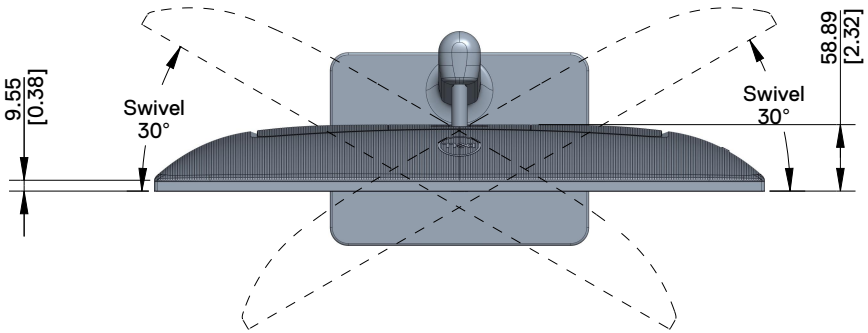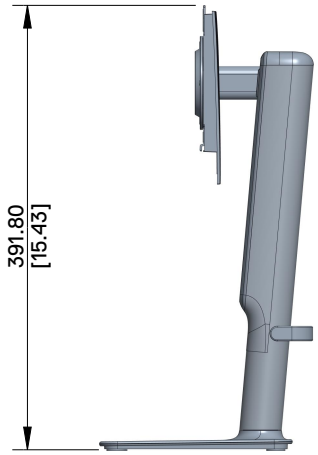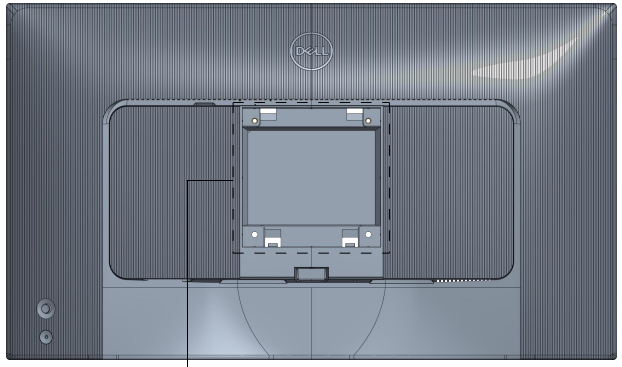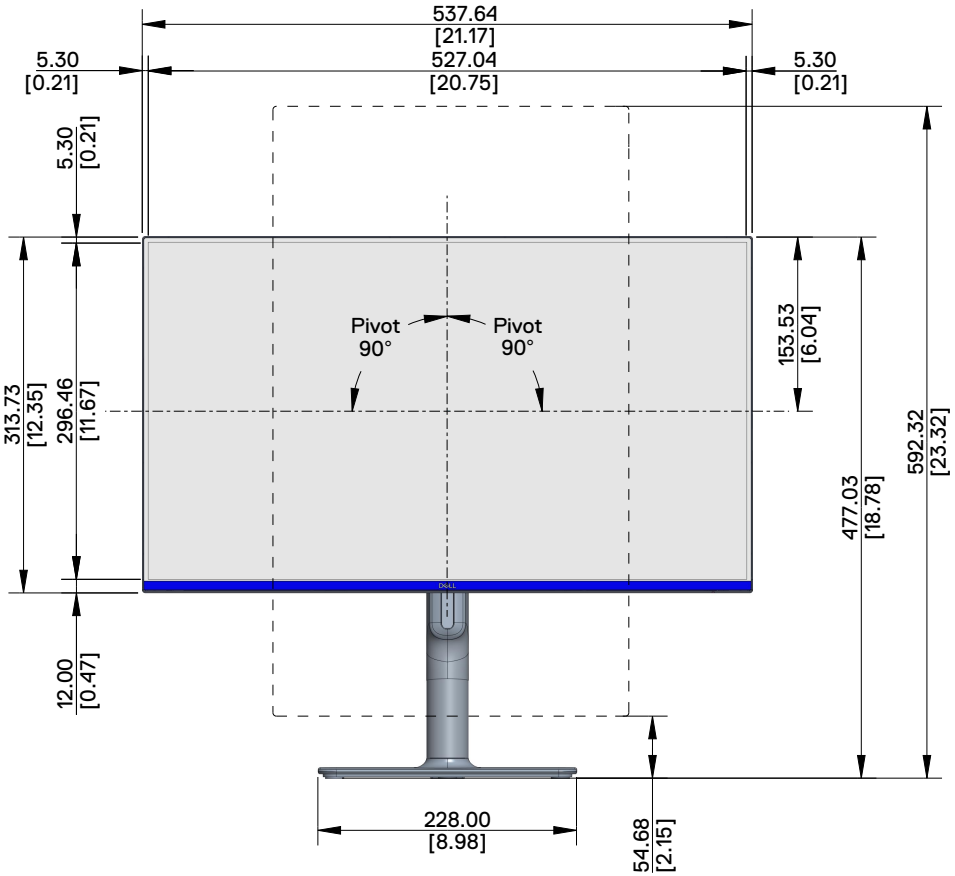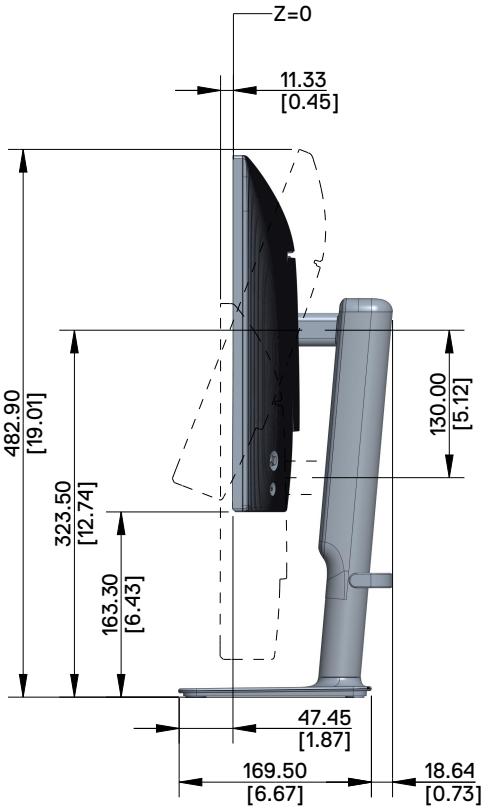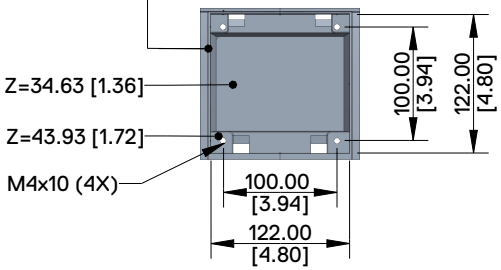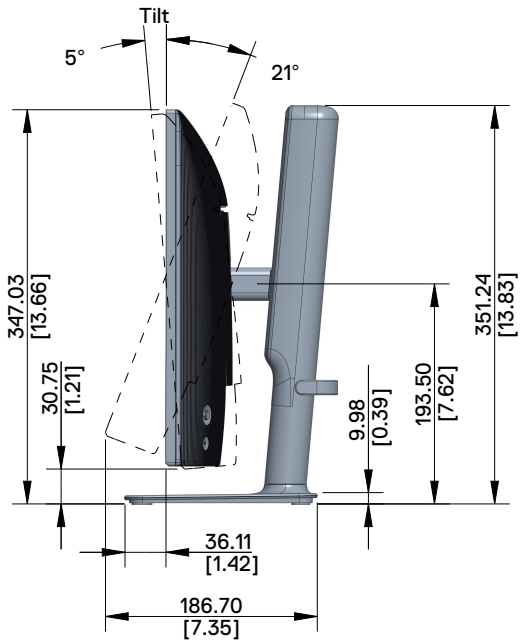
Unit : mm [inch]
Dimension : Nominal
Scale : Not to scale