PHILIPS

Television

Quick Start Guide

8309/8319 Series

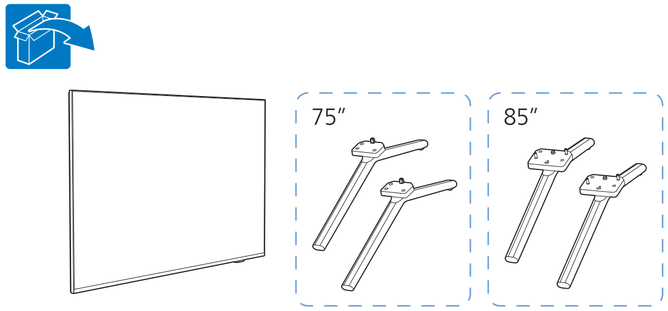

x2

75”(M5xL22) : x6
85”(M5xL20) : x4

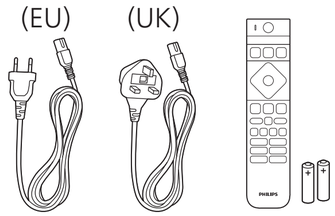

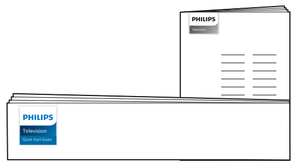

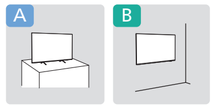

Register to find out more and get support
www.philips.com/TVsupport

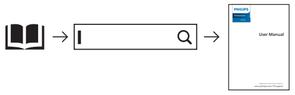

A 75” 85”

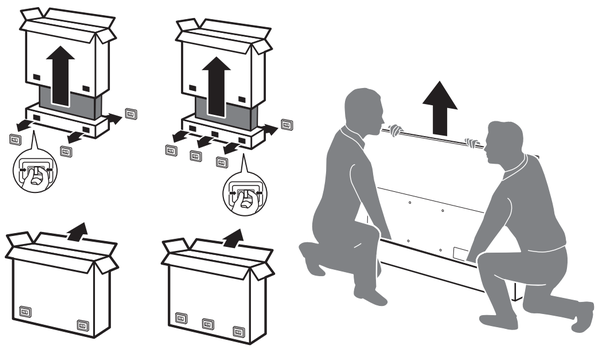

1

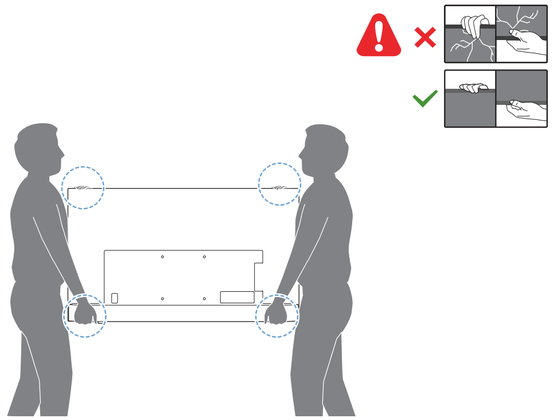

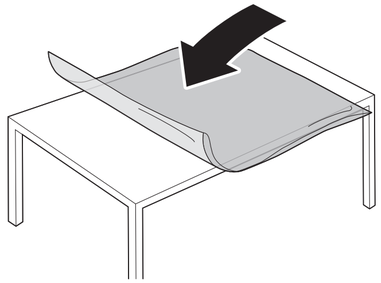

B

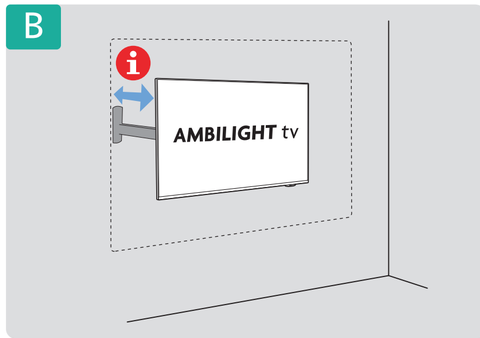

1 85”

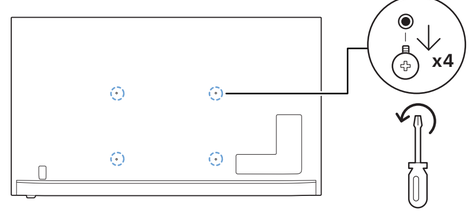

2 **Wall Mount dimensions (x, y)**
Dimensioni del montaggio a parete (x, y)

75” 300x300mm M8 (L: 12mm~25mm) 189 cm

85” 600x400mm M8 (L: 24mm~28mm) 215 cm

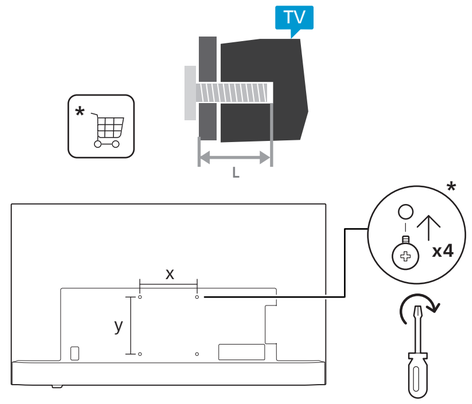

2

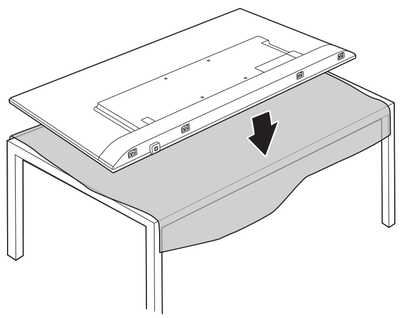

3

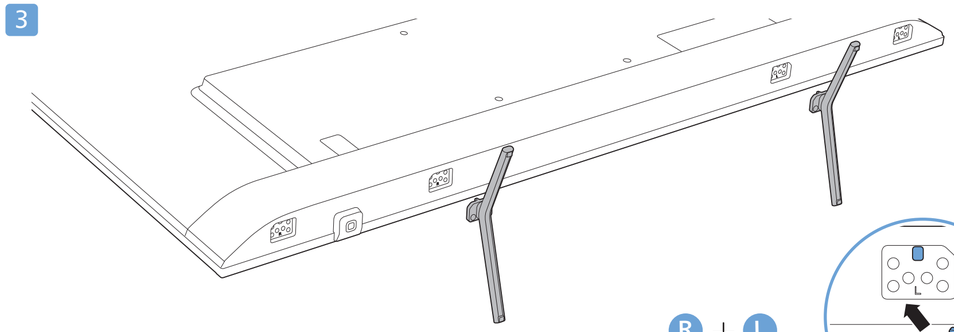

R + L

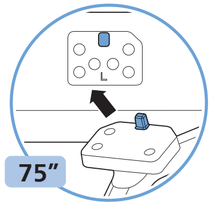

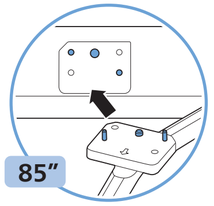

4 75”/85”

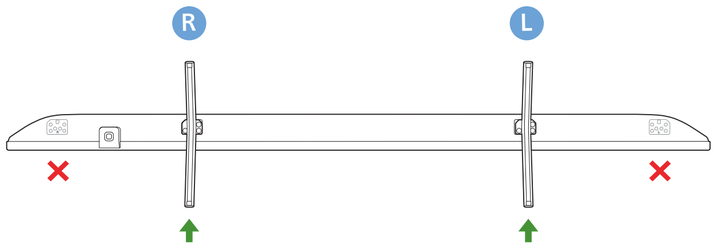

R + L

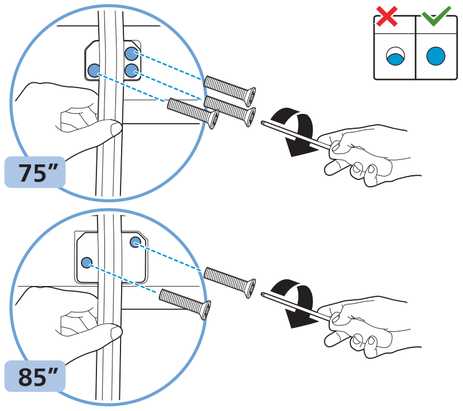

5

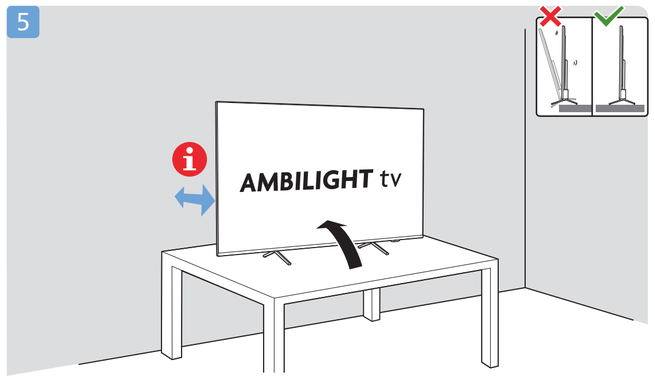

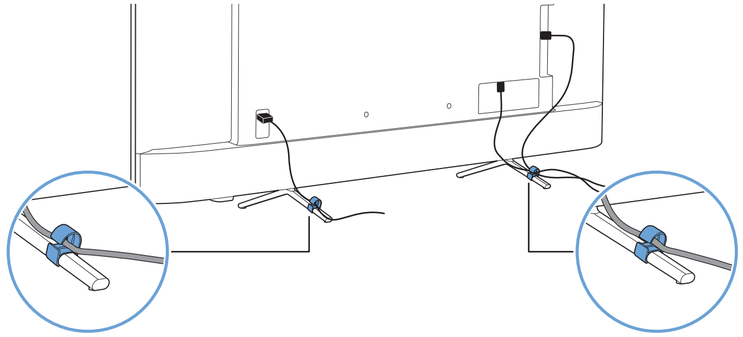

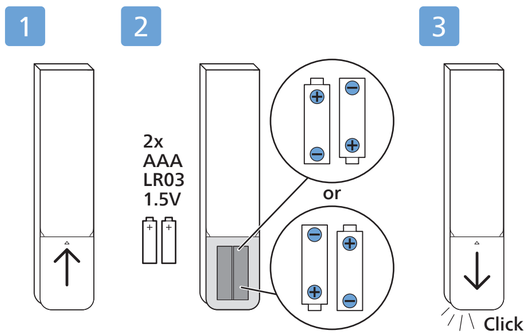

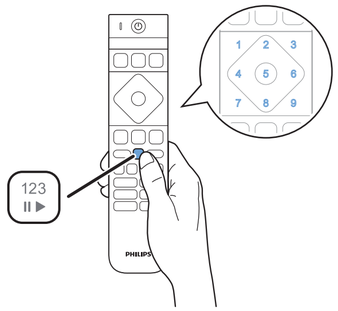

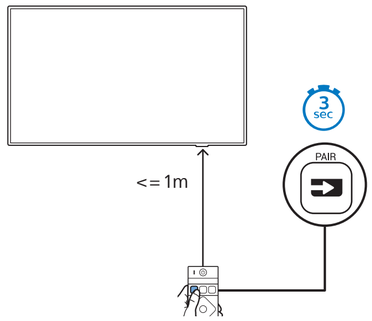

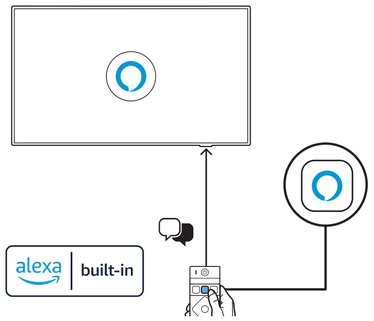

English	Read the safety instructions.
Български	Прочетете инструкциите за безопасност.
Čeština	Přečtěte si bezpečnostní pokyny.
Hrvatski	Pročitajte sigurnosne upute.
Dansk	Læs sikkerhedsforskrifterne.
Deutsch	Lesen Sie die Sicherheitshinweise.
Ελληνικά	Διαβάστε τις οδηγίες ασφαλείας.
Eesti	Lugege ohutusnõudeid.
Español	Lea las instrucciones de seguridad.
Français	Lisez les consignes de sécurité.
Italiano	Leggere le istruzioni di sicurezza.
Казакша	Қорғаныстық нұсқаулар.
Latviešu	Izlasiet drošības norādījumus.
Lietuvių	Perskaitykite saugos instrukcijas.
Magyar	Olvassa el a biztonsági utasításokat.
Nederlands	Lees de veiligheidsvoorschriften.
Norsk	Les sikkerhetsforskriftene.
Polski	Zapoznaj się z instrukcjami bezpieczeństwa.
Português	Leia as instruções de segurança.
Română	Citiți instrucțiunile de siguranță.
Русский	Читайте инструкции по технике безопасности.
Srpski	Pročitajte bezbednosna uputstva.
Slovenščina	Preberite varnostna navodila.
Slovenský	Prečítajte si bezpečnostné pokyny.
Suomi	Lue turvaohjeet.
Svenska	Läs säkerhetsinstruktionerna.
ภาษาไทย	โปรดอ่านคำแนะนำด้านความปลอดภัย
Türkçe	Güvenlik talimatlarını okuyun.
Українська	Читайте інструкції з техніки безпеки.
العربية	قراءة تعليمات السلامة.
עברית	קראו את הוראות הבטיחות

FSC Logo
H:12mm

FEUILLE
Séparez les éléments avant de trier

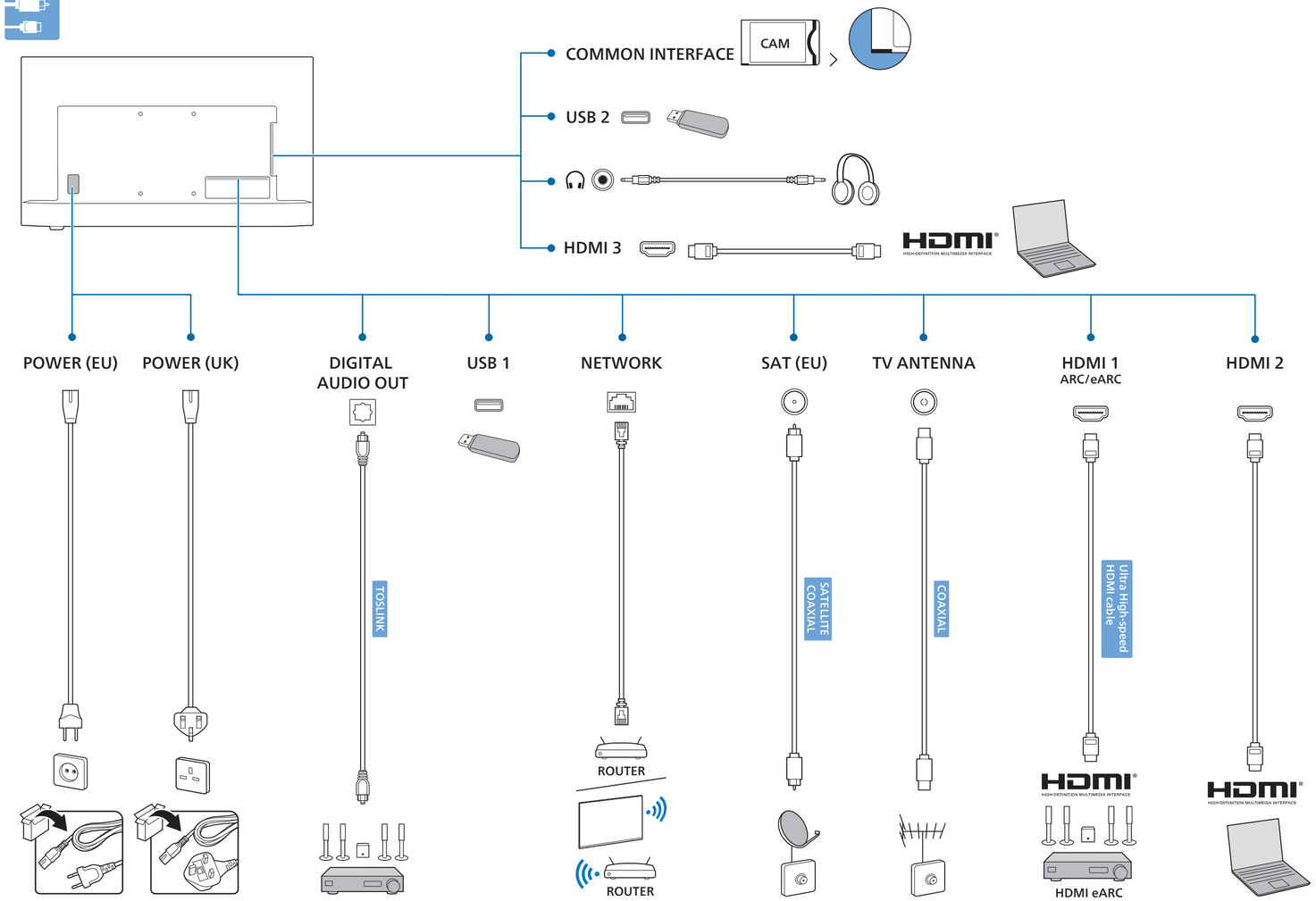

AMBILIGHT tv

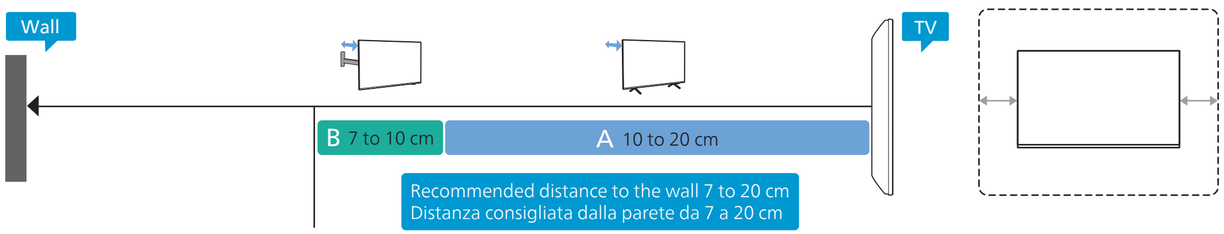

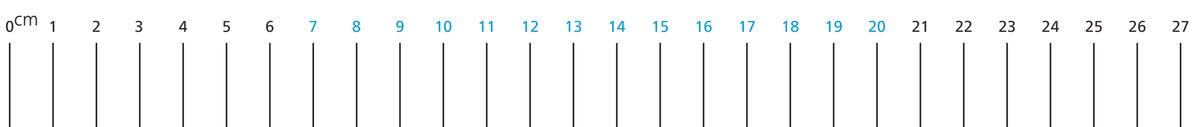

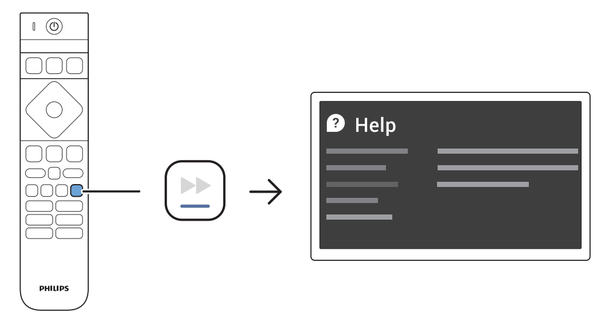

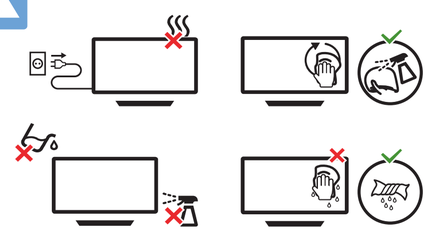

All registered and unregistered trademarks are property of their respective owners.
Specifications are subject to change without notice.
Philips and the Philips Shield Emblem are registered trademarks of Koninklijke Philips N.V. and are used under license.
This product has been manufactured by and is sold under the responsibility of TP Vision Europe B.V., and TP Vision Europe B.V. is the warrantor in relation to this product.
2024© TP Vision Europe B.V. All rights reserved.
www.philips.com/welcome