Electrolux

electrolux.com/register



EW6S507W

EN User Manual | **Washing Machine**

Welcome to Electrolux! Thank you for choosing our appliance.



Get usage advice, brochures, trouble shooter, service and repair information:
www.electrolux.com/support

Subject to change without notice.

CONTENTS

1. SAFETY INFORMATION..... 2
2. SAFETY INSTRUCTIONS..... 4
3. PRODUCT DESCRIPTION..... 6
4. TECHNICAL DATA..... 7
5. INSTALLATION..... 7
6. ACCESSORIES..... 11
7. CONTROL PANEL..... 11
8. DIAL AND BUTTONS..... 12
9. PROGRAMMES..... 14
10. SETTINGS..... 18
11. BEFORE FIRST USE..... 18
12. DAILY USE..... 19
13. HINTS AND TIPS..... 22
14. CARE AND CLEANING..... 24
15. TROUBLESHOOTING..... 29
16. CONSUMPTION VALUES..... 32
17. QUICK GUIDE..... 33
18. ENVIRONMENTAL CONCERNS..... 35

1. ⚠ SAFETY INFORMATION



Before beginning the installation and use of this appliance, carefully read the supplied instructions.
The manufacturer is not responsible for any injuries or damage that are the result of incorrect installation or usage.
Always keep the instructions in a safe and accessible location for future reference.

1.1 Children and vulnerable people safety

- This appliance can be used by children aged from 8 years and above and persons with reduced physical, sensory or mental capabilities or lack of experience and knowledge if they have been given supervision or instruction concerning

the use of the appliance in a safe way and understand the hazards involved.
- Children between 3 and 8 years of age and persons with very extensive and complex disabilities shall be kept away from the appliance unless continuously supervised.
- Children of less than 3 years of age should be kept away from the appliance unless continuously supervised.
- Children should be supervised to ensure that they do not play with the appliance.
- Keep all packaging away from children and dispose of it appropriately.
- Keep detergents away from children.
- Keep children and pets away from the appliance when the door is open.
- If the appliance has a child safety device, it should be activated.
- Children shall not carry out cleaning and user maintenance of the appliance without supervision.

1.2 General Safety

- This appliance is for washing domestic-type, machine-washable laundry only.
- This appliance is designed for single household domestic use in an indoor environment.
- This appliance may be used in, offices, hotel guest rooms, bed & breakfast guest rooms, farm guest houses and other similar accommodation where such use does not exceed (average) domestic usage levels.
- Do not change the specification of this appliance.
- The appliance maximum load is 7.0 kg. Do not exceed the maximum load of each programme (refer to the “Programmes” chapter).
- The operating water pressure at the water entry point from the outlet connection must be between 0.5 bar (0.05 MPa) and 10 bar (1.0 MPa).

- The ventilation opening in the base must not be covered by a carpet, mat, or any floor covering.
- The appliance must be connected to the water mains using the new supplied hose sets, or other new hose sets supplied by the Authorised Service Centre.
- Old hose sets must not be reused.
- If the mains power supply cable is damaged, it must be replaced by the manufacturer, its Authorised Service Centre or similarly qualified persons to avoid an electrical hazard.
- Before any maintenance operation, deactivate the appliance and disconnect the mains plug from the socket.
- Do not use high pressure water sprays and/or steam to clean the appliance.
- Clean the appliance with a moist cloth. Use only neutral detergents. Do not use abrasive products, abrasive cleaning pads, solvents or metal objects.

2. SAFETY INSTRUCTIONS

2.1 Installation

ⓘ

The installation must comply with relevant national regulations.

- Remove all the packaging and the transit bolts including rubber bush with plastic spacer.
- Keep the transit bolts in a safe place. If the appliance is to be moved in the future they must be reattached to lock the drum to prevent an internal damage.
- Always take care when moving the appliance as it is heavy. Always use safety gloves and enclosed footwear.
- Follow the installation instructions supplied with the appliance.
- Do not install or use a damaged appliance.
- Do not install or use the appliance where the temperature can be less than 0°C or where it is exposed to the weather.
- The floor area on which the appliance is to be installed must be flat, stable, heat resistant and clean.
- Make sure that there is air circulation between the appliance and the floor.
- When the appliance is in its permanent position, check if it is levelled correctly with the aid of a spirit level. If it is not, adjust the feet accordingly.
- Do not install the appliance directly above a floor drain.
- Do not spray water on the appliance and do not expose it to excessive humidity.
- Do not install the appliance where the appliance door cannot be fully opened.
- Do not put a closed container to collect possible water leakage under the appliance. Contact the Authorised Service Centre to ensure which accessories can be used.

2.2 Electrical connection

⚠ **WARNING!**

Risk of fire and electric shock.

- WARNING: This appliance is designed to be installed / connected to a grounding connection in the building.

- Always use a correctly installed shockproof socket.
- Make sure that the parameters on the rating plate are compatible with the electrical ratings of the mains power supply.
- Do not use multi-plug adapters and extension cables.
- Make sure not to cause damage to the mains plug and to the mains cable. Should the mains cable need to be replaced, this must be carried out by our Authorised Service Centre.
- Connect the mains plug to the mains socket only at the end of the installation. Make sure that there is access to the mains plug after the installation.
- Do not touch the mains cable or the mains plug with wet hands.
- Do not pull the mains cable to disconnect the appliance. Always pull the mains plug.

2.3 Water connection

- The inlet water shall not exceed 25 °C.
- Do not cause damage to the water hoses.
- Before connection to new pipes, pipes not used for a long time, where repair work has been carried out or new devices fitted (water meters, etc.), let the water flow until it is clean and clear.
- Ensure that there are no visible water leaks during and after the first use of the appliance.
- Do not use an extension hose if the inlet hose is too short. Contact the Authorised Service Centre for the replacement of the inlet hose.
- When unpacking the appliance, It is possible to see water flowing from the drain hose. This is due to the testing of the appliance with the use of water in the factory.
- You can extend the drain hose to maximum 400 cm. Contact the Authorised Service Centre for the other drain hose and the extension.
- Make sure that there is access to the tap after the installation.

2.4 Use

⚠ WARNING!

Risk of injury, electric shock, fire, burns or damage to the appliance.

- Follow the safety instructions on the detergent packaging.
- Do not put flammable products or items that are wet with flammable products in, near or on the appliance.
- Do not wash fabrics which are heavily soiled with oil, grease or other greasy substances. It can damage rubber parts of the washing machine. Prewash such fabrics by hand before loading them into the washing machine.
- Do not touch the glass door while a programme operates. The glass can get hot.
- Make sure that all metal objects are removed from the laundry.

2.5 Service

- To repair the appliance contact the Authorised Service Centre. Use original spare parts only.
- Please note that self-repair or non-professional repair can have safety consequences and might void the guarantee.
- The following spare parts will be available for 10 years after the model has been discontinued: motor and motor brushes, transmission between motor and drum, pumps, shock absorbers and springs, washing drum, drum spider and related ball bearings, heaters and heating elements, including heat pumps, piping and related equipment including hoses, valves, filters and aquastops, printed circuit boards, electronic displays, pressure switches, thermostats and sensors, software and firmware including reset software, door, door hinge and seals, other seals, door locking assembly, plastic peripherals such as detergent dispensers. Please note that some of these spare parts are only available to professional repairers, and that not all spare parts are relevant for all models.

2.6 Disposal

⚠ WARNING!

Risk of injury or suffocation.

- Disconnect the appliance from the mains electrical and water supplies.
- Cut off the mains electrical cable close to the appliance and dispose of it.
- Remove the door catch to prevent children or pets from becoming trapped in the drum.
- Dispose of the appliance in accordance with local requirements for the disposal of Waste Electrical and Electronic Equipment (WEEE).

3. PRODUCT DESCRIPTION

3.1 Appliance overview

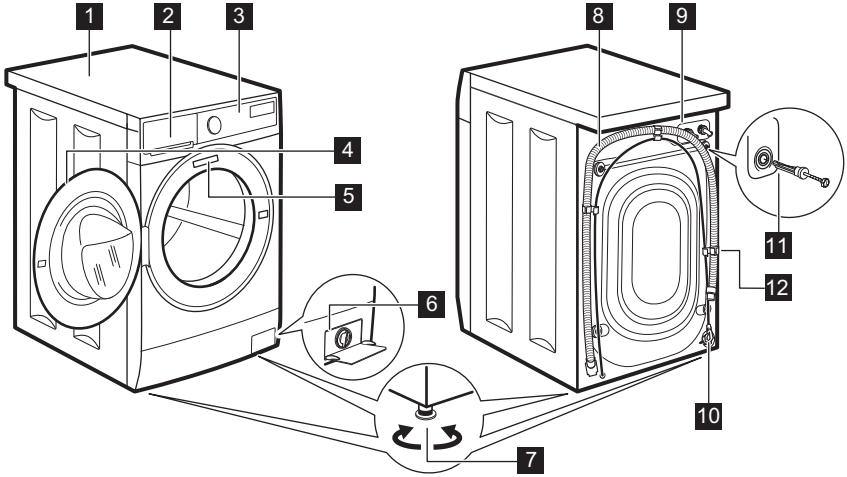

1 Worktop
2 Detergent dispenser
3 Control panel
4 Door handle
5 Rating plate
6 Drain pump filter
7 Feet for levelling the appliance
8 Drain hose
9 Inlet hose connection
10 Mains cable
11 Transit bolts
12 Hose support

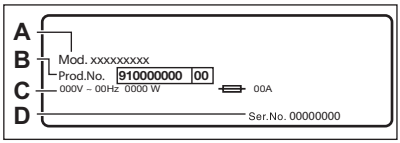

The rating plate reports the model name (**A**) , product number (**B**), electrical ratings (**C**) and serial number (**D**).

4. TECHNICAL DATA

Dimension	Width/ Height/ Total depth	59.5 cm / 84.3 cm / 48.8 cm
Electrical connection	Voltage Overall power Fuse Frequency	230 V 2100 W 10 A 50 Hz
Level of protection against ingress of solid particles and moisture ensured by the protective cover, except where the low voltage equipment has no protection against moisture		IPX4
Water supply pressure	Minimum Maximum	0.5 bar (0.05 MPa) 10 bar (1.0 MPa)
Water supply **1)**		Cold water
Maximum Load	Cotton	7.0 kg
Spin Speed	Maximum spin speed	951 rpm

1) Connect the water inlet hose to a water tap with a 3/4" thread.

5. INSTALLATION

> ⚠ **WARNING!**
> Refer to Safety chapters.

5.1 Unpacking

1. Remove the external film. If necessary, use a cutter.

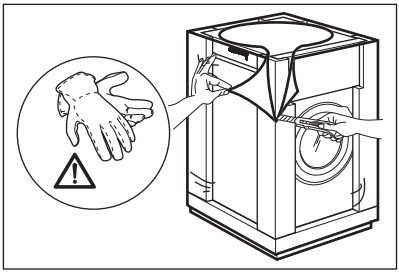

2. Remove the cardboard top and the polystyrene packaging materials.

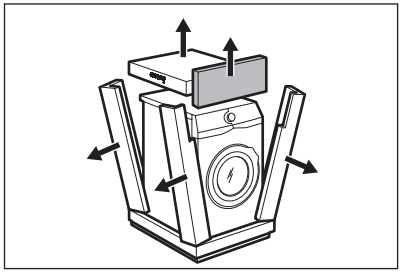

3. Open the door. Remove all the items from the drum.

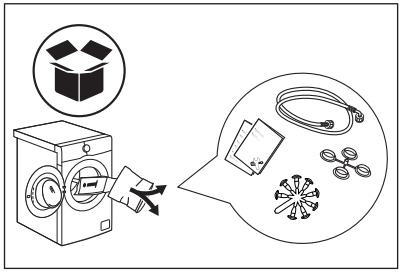

4. Put the front polystyrene packaging element on the floor behind the appliance. Carefully put down the

appliance onto its rear side.

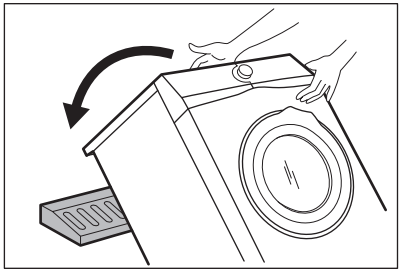

5. Remove the polystyrene protection from the bottom.

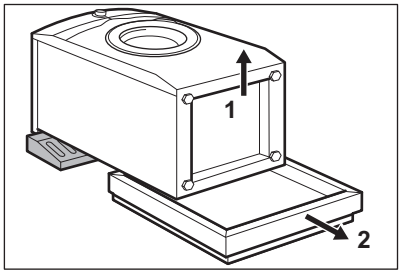

6. Put the appliance back into an upright position. Remove the power supply cable and the drain hose from the hose holder.

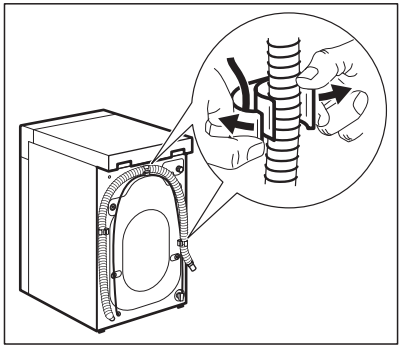

⚠ WARNING!

It is possible to see water flowing from the drain hose. This is because the washing machine has been tested at the factory.

7. Remove the four transit bolts and pull out the plastic spacers.

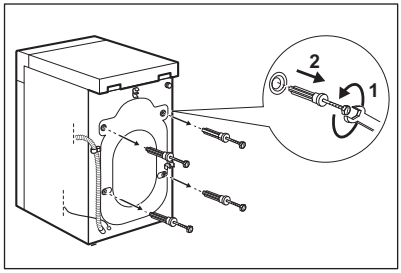

8. Put the plastic caps, that you find in the user manual bag, in the holes.

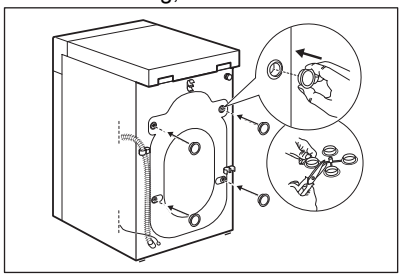

We recommend that you keep the packaging and the transit bolts for any transport of the appliance.

5.2 Information for installation

Positioning and levelling

Adjust the appliance correctly to prevent vibration, noise and movement of the appliance when it operates.

1. Install the appliance on a flat hard floor. The appliance must be levelled and stable. Make sure that the appliance does not touch the wall or other units and there is air circulation below the appliance.

2. Loosen or tighten the feet to adjust the level. All feet must rest firmly on the floor.

⚠ WARNING!

Do not put cardboard, wood or equivalent materials below the appliance feet to adjust the level.

The inlet hose

⚠ CAUTION!

Make sure there is no damage to hoses and there are no leaks from the couplings. Do not use an extension hose if the inlet hose is too short. Contact the service centre for information on inlet hose replacement.

1. Connect the water inlet hose to the back of the appliance.

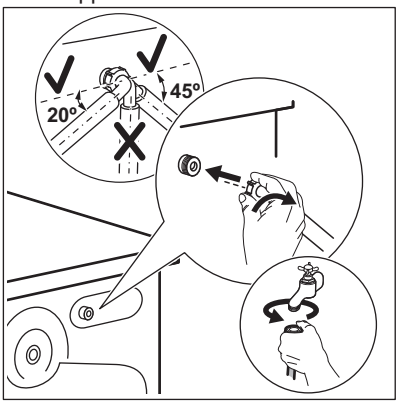

2. Position it toward left or right depending on the positon of the water tap. Make sure that the inlet hose is not in vertical position.
3. If necessary, loosen the ring nut to set it in the correct position.
4. Connect the water inlet hose to the cold water tap with 3/4" thread.

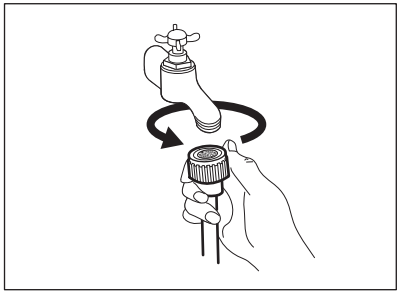

⚠ WARNING!

The inlet water shall not exceed 25 °C.

Water drainage

The drain hose should stay at a height of no less than 60 cm and not more than 100 cm.

ⓘ

You can extend the drain hose to maximum 400 cm. Contact the authorised service centre to buy the other drain hose and the extension.

It is possible to connect the drain hose in different ways:

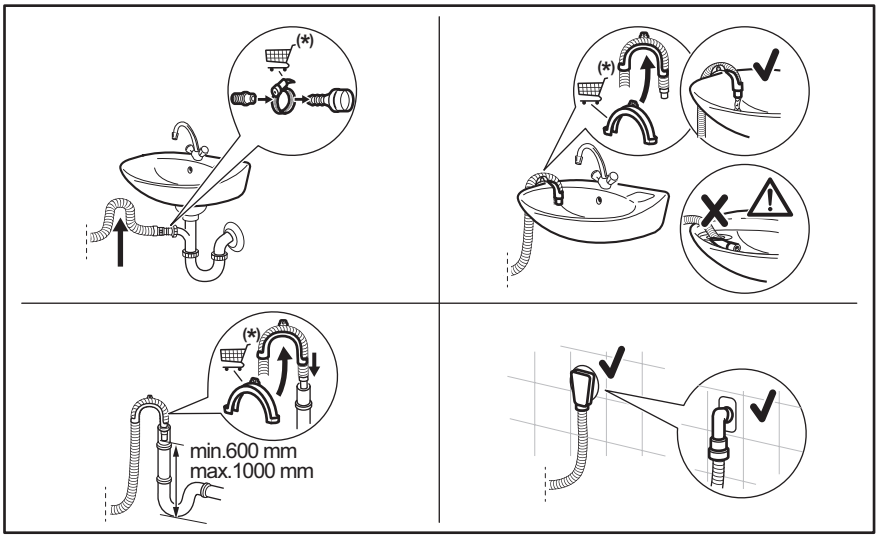

Make sure that the drain hose makes a loop to prevent particles going into the appliance from the sink.

Connect the drain hose to the spigot and tighten it with a clamp. Make sure that the drain hose makes a loop to prevent particles going into the appliance from the sink.

Position the hose directly to a built-in drain pipe in the room wall and tighten it with a clamp.

Without the plastic hose guide, to a sink spigot- Put the drain hose in the spigot and tighten it with a clamp.

The drain hose can be bent into U shape and put around the plastic guide. On the edge of a sink - Fasten the guide to the water tap or to the wall.

ⓘ

Make sure that the plastic guide cannot move when the appliance drains and the drain hose end is not immersed in the water. There may be a return of dirty water into the appliance. Buy accessories from authorised supplier.

To a stand pipe with vent hole - Insert the drain hose directly into a drain pipe or stand pipe

ⓘ

The end of the drain hose must always be ventilated , i.e. the inner diameter of the drain pipe (min. 38 mm - min. 1.5") must be larger than the external diameter of the drain hose.

5.3 Electrical connection

At the end of installation you can connect the mains plug to the mains socket.

The rating plate and the 'Technical Data' chapter indicate the necessary electrical ratings. Make sure that they are compatible with the mains power supply.

Check that your domestic electrical installation can take the maximum load required, also taking into account any other appliances may also be in use.

Connect the appliance to an earthed socket.

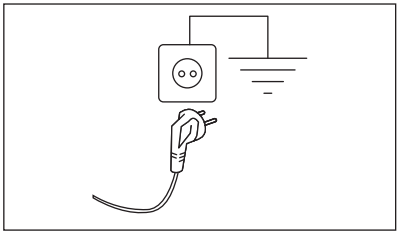

The power supply cable must be easily accessible after installing the appliance.

For any electrical work required to install this appliance, contact our Authorised Service Centre.

The manufacturer does not accept any responsibility for damage or injury through failure to comply with the above safety precaution.

6. ACCESSORIES

6.1 Fixing plate kit

If you install the appliance on a plinth that is not an accessory supplied by ELECTROLUX, secure the appliance in the fixing plates.

Read carefully the instructions supplied with the accessory.

6.2 Available in www.electrolux.com/shop or from authorised dealer

Read carefully the instructions supplied with the accessory.

Only appropriate accessories approved by ELECTROLUX ensure the safety standards of the appliance. If unapproved parts are used, any claims will be invalidated.

7. CONTROL PANEL

7.1 Special features

Your new washing machine meets all modern requirements for an effective treatment of laundry with low water, energy and detergent consumption and will care for fabrics.

- The **SensiCare System** detects the laundry load weight defining the programme duration in 30 seconds. The washing programme is tailored to the laundry load and the type of fabric without consuming more time, energy and water than necessary.

7.2 Control panel description

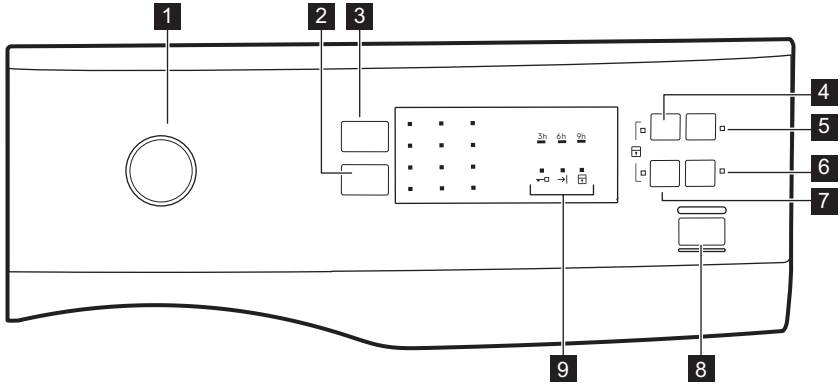

1 Programme knob
2 Centrifuga reduction touchpad
3 Temperatura touchpad
4 Prelavaggio touchpad
5 Partenza Ritardata touchpad
6 Extra Risciacquo touchpad
7 Rapido touchpad
8 Avvio/Pausa touchpad
9 Programme status indicators:
Door locked indicator
End cycle indicator
Child lock indicator

8. DIAL AND BUTTONS

8.1 Introduction

The options/functions are not available with all washing programmes. Check the compatibility between options/functions and washing programmes in the "Programme Chart". An option/function can exclude another one, in this case the appliance doesn't allow you to set incompatible options/functions.

8.2 Temperatura

When you select a washing programme, the appliance automatically proposes a default temperature. Touch this button repeatedly until the indicator of the desired temperature value comes on.

When the indicator comes on, the appliance does not heat the water.

8.3 Centrifuga

With this option you can change the default spin speed. The indicator of the set speed comes on.

Additional spin options:

- **Decrease the spin speed.**
- **No Spin** . The related indicator comes on.
  Set this option to deactivate all spin phases. The appliance performs only the draining phase of the selected washing programme. Set this option for very delicate fabrics. The rinse phase uses

more water for some washing programmes

- **Rinse Hold** . The related indicator comes on.
  The final spin is not performed. The water of the last rinse is not drained out to prevent the fabrics from creasing. The washing programme ends with water in the drum.
  The door stays locked and the drum turns regularly to reduce creasing. You must drain the water to unlock the door.

  If you touch the Avvio/Pausa button, the appliance performs the spinning phase and drains the water.

The appliance empties the water out automatically after approximately 18 hours.

8.4 Prelavaggio

With this option you can add a prewash phase to a washing programme.

The relevant indicator illuminates.

- Use this option to add a pre-wash phase at 30 °C before the washing phase. This option is recommended for heavily soiled laundry, especially if containing sand, dust, mud and other solid particles.

This option can increase the programme duration.

8.5 Partenza Ritardata

With this option you can delay the start of a programme to a more convenient time.

Touch the button to set the required delay. The programme can be delayed by 9, 6 or 3 hours.

The indicator of the option and the indicator of the set value are on.

8.6 Extra Risciacquo

With this option you can add a few rinses according to the selected washing programme. The corresponding indicator illuminates.

Use this option for people with allergies to detergent residues and with sensitive skin.

This option increases the programme duration.

8.7 Rapido

With this option you can decrease the programme duration.

Use this option for items with light soil or items to refresh.

The related indicator comes on.

8.8 Avvio/Pausa

Touch the Avvio/Pausa button to start, pause the appliance or interrupt a running programme.

9. PROGRAMMES

9.1 Programme Chart

Programme Temperature range	Maximum load Reference spin speed	Programme description (Type of load and level of soiling)
Washing programmes		
Eco 40-60 40 °C **1)**	7.0 kg 1000 rpm	**White cotton and fast-coloured cotton**. Normally soiled items. The energy consumption decreases and the time of the washing programme is extended, ensuring good washing results.
Cotoni 40 °C 90 °C - Cold	7.0 kg 1000 rpm	**White cotton and coloured cotton**. Normal and heavy soil.
Sintetici 40 °C 60 °C - Cold	3.0 kg 1000 rpm	**Synthetic items or mixed fabric items**. Normally soiled items.
Delicati 30 °C 40 °C - Cold	1.5 kg 1000 rpm	**Delicate fabrics such as acrylics, viscose and mixed fabrics requiring gentler washing**. Normally and lightly soiled items.
Rapido 14' 30 °C	1.5 kg 800 rpm	**Synthetic and mixed fabric** items. Lightly soiled items and items to freshen up.
Risciacquo	7.0 kg 1000 rpm	**All fabrics, except woollens and very delicate fabrics.** Programme for rinsing and spinning the laundry. The default spin speed is the one used for cotton programmes. Reduce the spin speed according to the type of laundry. If necessary, set the Extra Risciacquo option to add rinses. With a low spin speed, the appliance performs delicate rinses and a short spin.
Centrifuga/Scarico	7.0 kg 1000	**All fabrics, except woollens and delicate fabrics**. To spin the laundry and to drain the water in the drum.
Vapore Anti-Allergy 60 °C	7.0 kg 1000 rpm	**White cotton items.** This high-performance wash program combined with steam vapour, removes more than 99,99% of bacteria and viruses **2)** keeping the temperature above 60°C throughout the washing phase; with an additional action on the fibers thanks to a vapour phase, an enhanced rinsing phase ensures a proper removal of detergent and micro-organism residues. This program ensures also a proper reduction of pollens/allergenic items.
Capi per Neonati 40 °C 40 °C - Cold	1.5 kg 1000 rpm	Delicate cycle suitable for baby's articles. High water level and delicate movement in washing phase protects colours and fibres.
Seta 30°C	0.5 kg 800 rpm	Special programme for **silk and mixed synthetic items**.

Programme Temperature range	Maximum load Reference spin speed	Programme description (Type of load and level of soiling)
Lana 40 °C 40 °C - Cold	1.5 kg 1000 rpm	**Machine washable wool, hand washable wool and other fabrics** with «hand washing» care symbol**3)**.
Sport 30 °C 40 °C - Cold	3.0 kg 1000 rpm	**Synthetic sport items**. This programme is designed to gently wash modern outdoor sportswear and is also suitable for gym, cycling or jogging clothes or similar.
Outdoor 30 °C 40 °C - Cold	2.0 kg**4)** 1000 rpm	ⓘ Do not use fabric softener and make sure that there is no softener residue in the detergent dispenser. **Synthetic sport items.** This programme is designed to gently wash modern outdoor sportswear and is also suitable for gym, cycling or jogging clothes or similar. The recommended laundry load is 2.0 kg. **Waterproof, waterproof-breathable and water repellent fabrics.** This programme can also be used as a water repellency restoring cycle, specifically tailored for treating clothes with a hydrophobic coating. To perform the water repellency restoring cycle, proceed as follows: • Pour the washing detergent in the compartment . • Pour a special water repellency restorer for fabric into the softener compartment of the drawer . • Reduce the laundry load to 1.0 kg. ⓘ To further improve the water repellency restoring action, dry the laundry in a tumble dryer by setting the Outdoor drying programme (if available and if the garment care label permits tumble drying).

Programme Temperature range	Maximum load Reference spin speed	Programme description (Type of load and level of soiling)
Denim 30 °C 40 °C - Cold	2.0 kg 800 rpm	**Special programme for Denim clothing with delicate washing phase to minimize colour fading and marks**. For better care a reduced load size is recommended.

1) According to Commission Regulation EU 2019/2023, this programme at 40 °C is able to clean normally soiled cotton laundry declared to be washable at 40 °C or 60 °C, together in the same cycle.

For the reached temperature in the laundry, the programme duration and other data, please refer to 'Consumption Values' chapter.
The most efficient programmes in terms of energy consumption are generally those that perform at lower temperatures and longer duration.

2) Tested for Staphylococcus aureus, Enterococcus faecium, Candida albicans, Pseudomonas aeruginosa and MS2 Bacteriophage in external test performed by Swissatest Testmaterialien AG in 2021 (Test Report No. 202120117).

3) During this cycle the drum rotates slowly to ensure a gentle wash. It can seem that the drum doesn't rotate or doesn't rotate properly, but this is normal for this programme.

4) Washing programme.

Programme options compatibility

Programme	Centrifuga					1)	
Eco 40-60	■		■		■		
Cotoni	■	■	■	■	■	■	■
Sintetici	■	■	■	■	■	■	■
Delicati	■	■	■		■	■	■
Rapido 14'	■	■	■		■		
Risciacquo	■	■	■		■		■
Centrifuga/Scarico	■	■			■		
Vapore Anti-Allergy	■	■	■	■	■		■
Capi per Neonati	■	■	■	■	■		■
Seta	■	■			■		
Lana ®	■	■	■		■		
Sport	■	■	■	■	■		■
Outdoor	■	■	■		■		■

Programme	Centrifuga					1)	
Denim	■	■	■		■		■

1) When you set the Rapido option, we recommend that you decrease the quantity of the laundry. It is possible to keep the full load but the washing results can be unsatisfactory. Recommended load: cotton: 3.5 kg, synthetics and delicates: 1.5 kg.

Suitable detergents for washing programmes

Programme	Universal powder 1)	Liquid Universal	Liquid for coloureds	Delicates woollens	Special
Eco 40-60	▲	▲	▲	--	--
Cotoni	▲	▲	▲	--	--
Sintetici	▲	▲	▲	--	--
Delicati	--	--	--	▲	▲
Rapido 14'	--	▲	▲	--	--
Risciacquo	--	--	--	--	--
Centrifuga/Scarico	--	--	--	--	--
Vapore Anti-Allergy	▲	▲	--	--	▲
Capi per Neonati	--	▲	▲	--	▲
Seta	--	--	--	▲	▲
Lana	--	--	--	▲	▲
Sport	--	▲	▲	--	▲
Outdoor	--	--	--	▲	▲
Denim	--	--	▲	▲	▲

1) At temperature higher than 60 °C the use of powder detergent is recommended.

▲ = Recommended | -- = Not recommended

9.2 Woolmark Wool Care - Blue



The wool wash cycle of this machine has been approved by The Woolmark Company for the washing of wool garments labelled as «hand wash» provided that the products are washed according to the instructions on the garment label and those issued by the manufacturer of this washing machine. M1460
The Woolmark symbol is a Certification mark in many countries.

10. SETTINGS

10.1 Child Lock

With this option you can prevent children from playing with the control panel.

- To **activate/deactivate** this option, press and at the same time until the indicator **comes on/goes off**.

You can activate this option:

- After you press : the options and the programme knob are locked.
- Before you press : the appliance cannot start.

10.2 Acoustic signals

The acoustic signals operate when:

- The programme is completed.
- The appliance has a malfunction.

To **deactivate/activate** the acoustic signals, press and at the same time for 6 seconds.

If you deactivate the acoustic signals, they continue operate when the appliance has a malfunction.

10.3 Permanent Extra Rinse

With this option you can permanently have an extra rinse when you set a new programme.

- To **activate/deactivate** this option press and at the same time until the indicator **comes on/goes off**.

11. BEFORE FIRST USE

1. Make sure that the electrical power is available and the water tap is open.
2. Pour 2 litres of water into the detergent compartment marked as **2**.

This action activates the drain system.

3. Pour a small quantity of detergent into the compartment marked as **2**.
4. Set and start a programme for cotton at the highest temperature without any laundry in the drum.

This removes all possible dirt from the drum and the tub.

⚠ WARNING!

Refer to Safety chapters.

12.1 Loading the laundry

1. Open the appliance door.
2. Empty the pockets and unfold the items before you put them in the appliance.
3. Put the laundry in the drum, one item at a time.

Do not put too much laundry in the drum.

4. Close the door firmly.

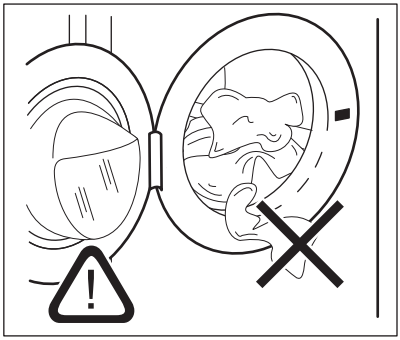

⚠ CAUTION!

Make sure that no laundry gets caught between the seal and the door to avoid risk of water leakage and damage to the laundry.

ⓘ

Washing heavily oiled, greasy stains could cause damage to rubber parts of the washing machine.

12.2 Using detergent and additives

1. Measure out the detergent and the fabric conditioner.
2. Put the detergent and the fabric conditioner into the compartments.
3. Carefully close the detergent drawer

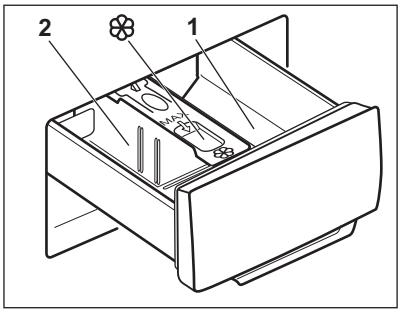

⚠ CAUTION!

Use only specified detergents for washing machine.

ⓘ

Always obey the instructions that you find on the packaging of the detergent products.

1	Detergent compartment for prewash phase or soak programme (if available). Add the detergent for prewash and soak before the start of the programme.
2	Detergent compartment for washing phase. If you use a liquid detergent, put it immediately before you start the programme.
❀	Compartment for liquid additives (fabric conditioner, starch). Put the product in the compartment before you start the programme.

After a washing cycle, if necessary, remove any detergent residue from the detergent dispenser.

12.3 Changing position of detergent divider

1. Pull out the detergent dispenser. The position **A** of the detergent divider is for **powder detergent** (factory setting).

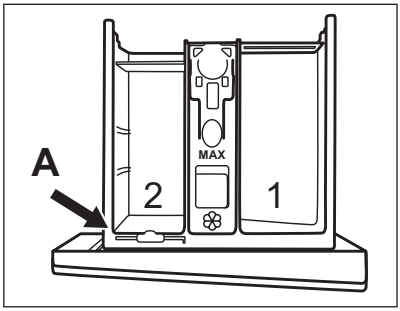

2. **To use also liquid detergent/additive or bleach:** Remove detergent divider from the position **A** and insert it in position **B**.

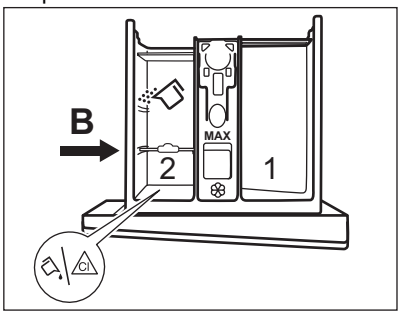

The position **B** of the detergent divider is for powder detergent in the rear compartment and for liquid detergent/ additive or bleach in the front compartment.

3. **To use only liquid detergent:** Insert the detergent divider in position **C**.

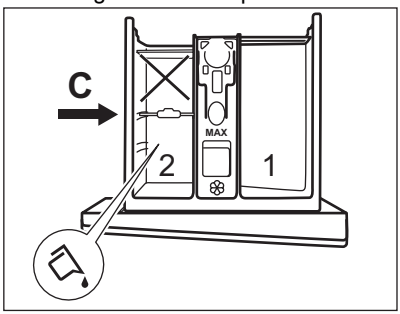

- Do not use gelatinous or thick liquid detergents.
- Do not exceed the maximum dose of liquid detergent.
- Do not set the prewash phase.
- Do not set the delay start function.

4. Measure out the detergent and the fabric conditioner and carefully close the detergent dispenser.

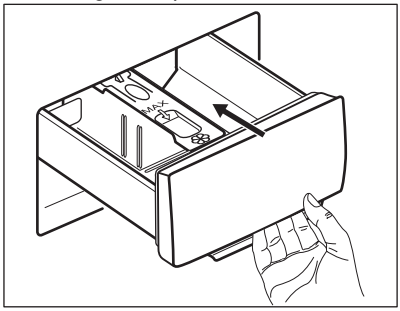

Make sure that the detergent divider is inserted properly and does not cause a blockage when you close the drawer.

12.4 Setting a programme

1. Turn the programme dial to select the desired washing programme.

The indicator of the Avvio/Pausa ▷‖ button flashes.

2. To change the temperature and/or the spin speed, touch the related buttons.
3. If desired, set one or more options by touching the related buttons.

ⓘ

If a selection is **not possible** the indicator ▷‖ flashes red.

12.5 Starting a programme

Touch the Avvio/Pausa ▷‖ button to start the programme. It is not possible to start the programme when the indicator of the button is off and doesn't flash (e.g. programme dial on a wrong position).
The related indicator stops flashing and stays on.
The programme starts, the door is locked.
The indicator 🔒 is on.

12.6 Starting a programme with the delay start

1. Touch the ⏲ button to set the delay you want to set.

The indicator of the set delay is on. The indicator is on.

2. Touch the Avvio/Pausa button. The appliance locks the door and starts the countdown. When the countdown is completed, the programme starts automatically.

You can cancel or change the set of the delay start before you press the .

To cancel the delay start :

Cancelling the delay start after the countdown has started

To cancel the delay start:

1. Touch the Avvio/Pausa button to pause the appliance. The related indicator flashes.
2. Touch the button repeatedly until the indicator of the set delay goes off.
3. Touch the Avvio/Pausa button again to start the programme immediately.

12.7 Interrupting a programme and changing the options

You can change only some options before they operate.

1. Press .

The indicator flashes.

2. Change the options.
3. Press again.

The programme continues.

12.8 Cancelling a running programme

1. Turn the programme knob to position to cancel the programme and to deactivate the appliance.
2. Turn the programme knob again to activate the appliance. Now, you can set a new washing programme.

Before starting the new programme the appliance could drain the water. In this case, make sure that the detergent is still in the detergent compartment, if not fill the detergent again.

12.9 The SensiCare System load detection

The programme duration in the display is referred to a **medium/high load**.

After touching the Avvio/Pausa button, the SensiCare System starts the laundry load detection:

1. The appliance detects the load in the first 30 seconds. In the programmes where Time Manager is available, during this phase the two dots separating hours from minutes are blinking and the drum rotates shortly.
2. The programme duration could be adjusted accordingly and could increase or decrease. After further 30 seconds, the water filling starts.

About 20 minutes after the programme start, the programme duration could be adjusted again depending on the capacity of water absorption of the fabrics.

The SensiCare detection is carried out with complete washing programmes only and if the programme duration has not been reduced.

The appliance can play a double beep to indicate overload or unevenly distributed load. The tune sounds if acoustic signals are not disabled.

12.10 Opening the door - Adding garments

If the temperature and level of the water in the drum are too high and/or the drum is still rotating you cannot open the door.

While a programme or the delay start operates, the appliance door is locked and the indicator is on.

1. Touch the button Avvio/Pausa to pause the appliance.

Wait until the door lock indicator goes off.

2. Open the appliance door. If necessary, add or remove the items.
3. Close the door and touch the Avvio/Pausa button.

The programme or the delay start continues to operate.

12.11 At the end of the programme

When the programme has finished, the appliance stops automatically. The acoustic signal operates (if it is activated).

The indicator of the button goes off.

The door unlocks and the indicator goes off.

- The indicator is on.
- Remove the laundry from the appliance.
- Make sure that the drum is empty.
- Keep the door and the detergent dispenser slightly ajar to prevent mildew and odours.
- Close the water tap.
- Turn the programme knob to position to deactivate the appliance.

The washing programme is completed, but there is water in the drum:

- The drum turns regularly to prevent the creases in the laundry.
- The door lock indicator is on. The indicator flashes. The door stays locked.
- You must drain the water to open the door.

To drain the water:

1. If necessary, decrease the spin speed. If you set , the appliance only drains.
2. Press . The appliance drains the water and spins.
3. When the programme is completed and the door lock indicator goes off, you can open the door.
4. Turn the programme knob to position to deactivate the appliance.

The appliance drains and spins automatically after approximately 18 hours (except for Wool programme).

12.12 Stand-by

Some minutes after the end of the washing programme, if you do not deactivate the appliance, the energy saving status activates.

The energy saving status decreases the energy consumption when the appliance is on the stand by.

- All indicators go off.
- The indicator of the flashes slowly .
- Press one of the options to deactivate the energy saving status.

If you set a programme or an option that ends with water in the drum, the energy saving status function **doesn't activate** to remind you to drain the water.

13. HINTS AND TIPS

WARNING!

Refer to Safety chapters.

13.1 The laundry load

- Divide the laundry in: white, coloured, synthetics, delicates and wool.

- Obey the washing instructions that are on the laundry care labels.
- Do not wash white and coloured items together.
- Some coloured items can discolour with the first wash. We recommend that you wash them separately for the first times.
- Turn multilayered fabrics, wool and items with painted illustrations inside out.
- Wash and pre-treat heavy soil stains with a suitable detergent before putting in drum.
- Be careful with the curtains. Remove the hooks and put the curtains in a washing bag or pillowcase.
- Do not wash laundry without hems or with cuts. Use a washing bag to wash small and/or delicate items (e.g. underwired bras, belts, tights, shoelaces, ribbons, etc.).

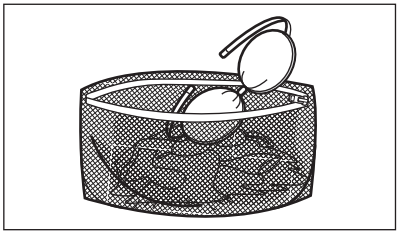

- A very small load can cause balance problems with the spin phase leading to excessive vibration. If this occurs:
  - interrupt the programme and open the door (refer to "Daily Use" chapter);
  -manually redistribute the load so that the items are spaced evenly around the tub;
  -press the Avvio/Pausa button. The spin phase continues.
- Button up pillowcases, close zippers, hooks and poppers. Tie up belts, cords, shoelaces, ribbons and any other loose elements.
- Empty the pockets and unfold the items.

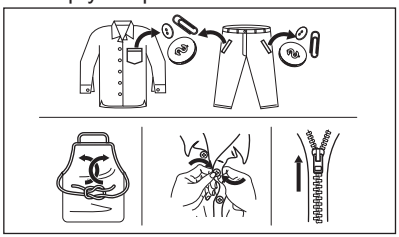

13.2 Stubborn stains

For some stains, water and detergent is not sufficient.

We recommend that you pre-treat these stains before you put the items in the appliance.

Special stain removers are available. Use the special stain remover that is applicable to the type of stain and fabric.

13.3 Detergent type and quantity

The choice of detergent and use of correct quantities not only affects your wash performance, but also helps to avoid waste and protect the environment:

- Use only detergents and other treatments specially made for washing machines. First, follow these generic rules:
  - powder detergents (also tablets and single-dose detergents) for all types of fabric, excluding delicate. Prefer powder detergents containing bleach for whites and laundry sanitization,
  - liquid detergents (also single-dose detergents) , preferably for low temperature wash programmes (60 °C max) for all types of fabric, or special ones for woollens only.
- The choice and quantity of detergent will depend on: type of fabric (delicates, woollens, cottons, etc), the colour of clothes, size of the load, degree of soiling, wash temperature and hardness of the water used.
- Follow the instructions that you find on packaging of the detergents or other treatments without exceeding the indicated maximum level (MAX).
- Do not mix different types of detergents.
- Use less detergent if:
  - you are washing a small load,
  - the laundry is lightly soiled,
  - there is large amounts of foam during washing.
- When using detergent tabs or pods, always put them inside the drum, not in the detergent dispenser and follow the manufacturer's recommendations .

Insufficient detergent may cause:

- unsatisfactory washing results,

- the wash load to turn grey,
- greasy clothes,
- mould in the appliance.

Excessive detergent may cause:
- sudsing,
- reduced washing effect,
- inadequate rinsing,
- a greater impact for the environment.

13.4 Ecological hints

To save water, energy and to help protect the environment, we recommend that you follow these tips:

- Loading the appliance to the **maximum capacity indicated for each programmes helps to reduce energy and water consumption**.
- With adequate pre-treatment, stains and limited soiling can be removed; the laundry can then be washed at a lower temperature.
- To use the correct quantity of detergent, refer to the quantity suggested by the detergent producer and check the water hardness of you domestic system. Refer to 'Water hardness'.
- Set the **maximum possible spin speed** for the selected washing programme **before drying your laundry in a tumble dryer**. This will save energy during drying!

13.5 Water hardness

If the water in your area is hard or medium hard, we recommend that you use a water softener for washing machines.

In areas where the water is soft it is not necessary to use a water softener.

To find out the water hardness in your area, contact your local water authority.

Use the correct quantity of water softener. Follow the instructions that you find on the packaging of the product.

14. CARE AND CLEANING

⚠ **WARNING!**

Refer to Safety chapters.

14.1 Periodic cleaning schedule

Periodic cleaning helps to extend the life of your appliance.

After each cycle, keep the door and the detergent dispenser slightly ajar to get air circulation and dry the humidity inside the appliance: this will prevent mildew and odours.

If the appliance is not used for a long time: close the water tap and unplug the appliance.

Indicative periodic cleaning schedule:

Descaling	Twice a year
Maintenance wash	Once a month
Clean door seal	Every two months
Clean drum	Every two months
Clean detergent dispenser	Every two months
Clean drain pump filter	Twice a year
Clean the inlet hose and the valve filter	Twice a year

The following paragraphs explain how you should clean each part.

14.2 Removing foreign objects

ⓘ

Make sure that pockets are empty and all loose elements are tied up before running your cycle. Refer to "The laundry load" in "Hints and tips".

Remove any foreign objects (such as metal clip, buttons, coins, etc) that you may find in the door seal, the filters and the drum. Refer to "Door seal with double lip trap", "Cleaning the drum", "Cleaning the drain pump" and "Cleaning the inlet hose and the valve filter"

paragraphs. If necessary, please contact the Authorised Service Centre.

14.3 External cleaning

Clean the appliance with mild soap and warm water only. Fully dry all the surfaces. Do not use a scouring pads or any scratching material.

⚠ CAUTION!

Do not use alcohol, solvents or chemical products.

⚠ CAUTION!

Do not clean the metal surfaces with chlorine-based detergent.

14.4 Descaling

ⓘ

If the water in your area is hard or medium hard, we recommend that you use a water softener for washing machines.

Regularly examine the drum to check for limescale.

Regular detergents already contain water softening agents, but we recommend to run a cycle with an empty drum and a descaling product.

ⓘ

Always follow the instructions that you find on the packaging of the product.

14.5 Maintenance wash

The repeated and prolonged use of low temperature programmes can cause detergent deposits, fluff residues, bacterial growth inside the drum and the tub. This could generate bad odours and mildew. To eliminate these deposits and clean the inner part of the appliance, run a maintenance wash regularly (at least once a month).

ⓘ

Refer to "Cleaning the drum" paragraph.

14.6 Door seal with double lip trap

This appliance is designed with a **self cleaning draining system**, allowing light fluff fibers that fall off the clothes to be drained out with the water. Regularly examine the seal. Coins, buttons, other small items can be recovered at the end of the cycle.

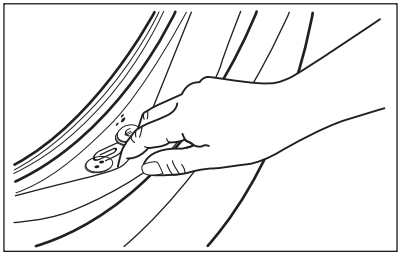

Clean it when needed, using ammonia cream cleanser agent without scratching the seal surface.

ⓘ

Always obey the instructions that you find on the packaging of the product.

Check and remove objects (if there are any) that could be trapped in the fold.

Make sure that no laundry remains between the seal and the door.

Use a moist cloth to wipe off any dirt or water residue left behind in the door seal after completion of program cycle.

14.7 Cleaning the drum

Regularly examine the drum to prevent rust forming.

Clean the drum with special products for stainless steel.

ⓘ

Always follow the instructions that you find on the packaging of the product.

For a thorough clean:

- Remove all laundry from the drum.
- Run a Cotoni programme with the highest temperature. Add a small quantity of powder detergent into the

empty drum, in order to rinse out any left residues.

14.8 Cleaning the detergent dispenser

To prevent possible deposits of dried detergent or clotted fabric softener and/or formation of mould in the detergent dispenser drawer, once in a while carry out the following cleaning procedure:

1. Open the drawer. Press the catch downwards as indicated in the picture and pull it out.

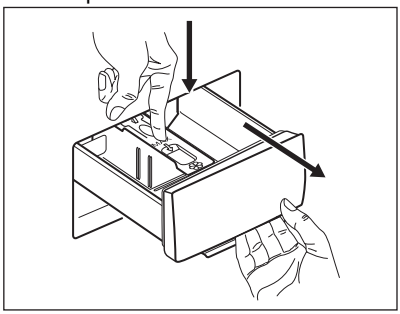

2. Remove the top part of the additive compartment to aid cleaning and flush it out under running warm water, to remove any traces of accumulated detergent. After cleaning, put the top part back into position.

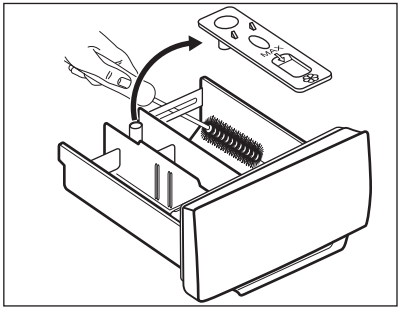

3. Make sure that all detergent residue is removed from the upper and lower part of the recess. Use a small brush to clean the recess.

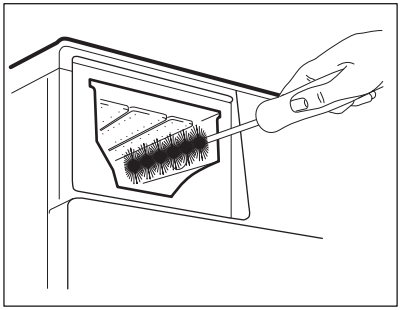

4. Insert the detergent drawer into the guide rails and close it. Run the rinsing programme without any clothes in the drum.

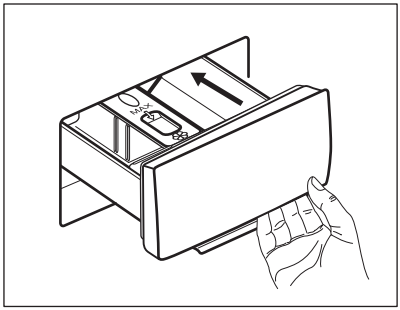

14.9 Cleaning the drain pump

Regularly check the drain pump filter and make sure that it is clean.

Clean the drain pump if:

- The appliance does not drain the water.
- The drum does not turn.
- The appliance makes an unusual noise because of the blockage of the drain pump.

⚠ WARNING!

- Disconnect the mains plug from the mains socket.
- Do not remove the filter while the appliance operates.
- Do not clean the pump if the water in the appliance is hot. Wait until the water cools down .
- Repeat Step 3 several times by closing and opening the valve until the water stops flowing out.

Always keep a rag nearby to dry up any water spillages when removing the filter.

Proceed as follows to clean the pump:

1.

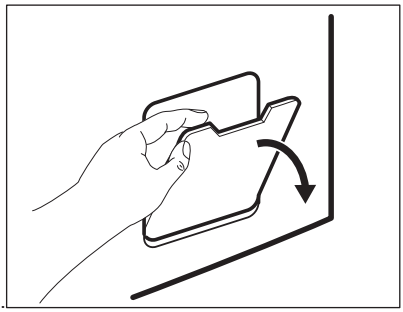

2.

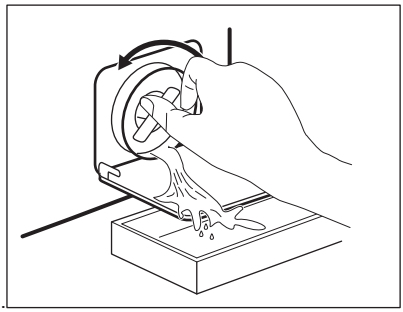

3.

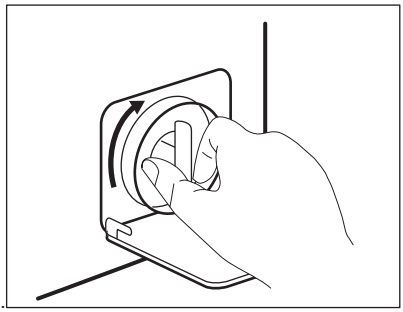

4.

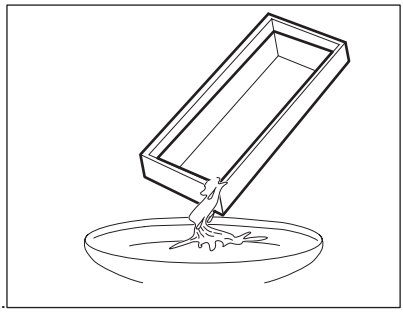

5.

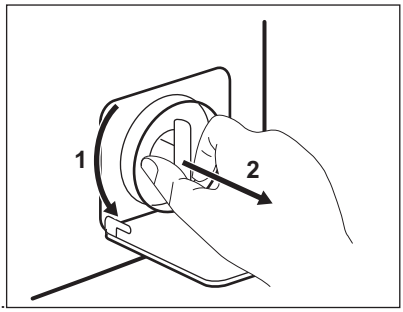

6.

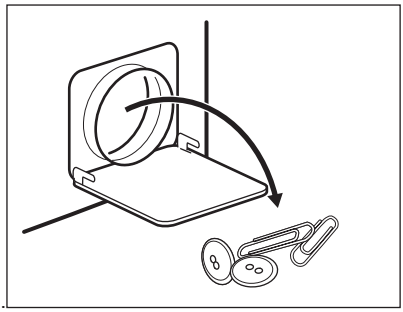

7.

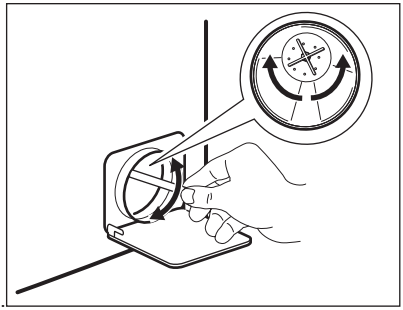

8.

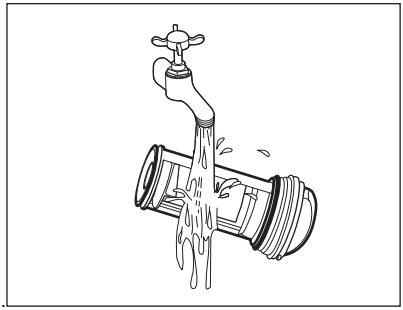

9.

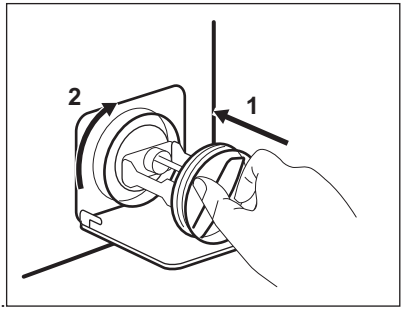

10.

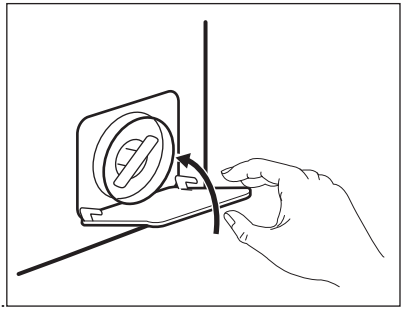

⚠ WARNING!

Make sure that the impeller of the pump can rotate. If it does not rotate, contact the Authorised Service Centre. Make sure also that you tighten the filter correctly to prevent leakages.

When you drain the water with the emergency drain procedure, you must activate the drain system again:

1. Put 2 litres of water in the main wash compartment of the detergent dispenser.
2. Start the programme to drain the water.

14.10 Cleaning the inlet hose and the valve filter

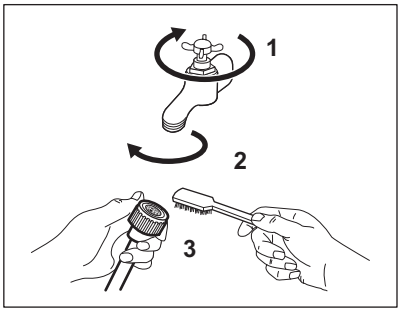

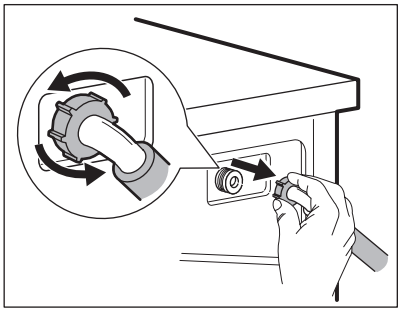

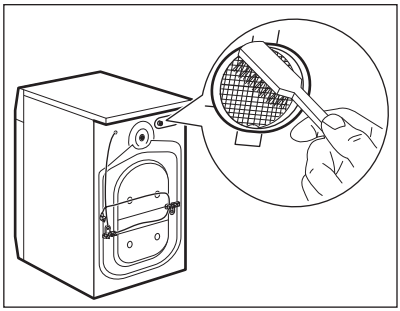

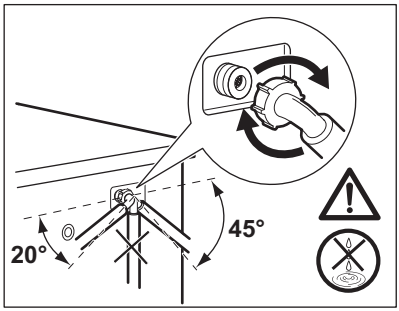

14.11 Emergency drain

If the appliance cannot drain the water, carry out the same procedure, described in 'Cleaning the drain pump' paragraph. If necessary, clean the pump.

When you drain the water with the emergency drain procedure, you must activate the drain system again:

1. Put 2 litres of water in the main wash compartment of the detergent dispenser.
2. Start the programme to drain the water.

14.12 Frost precautions

If the appliance is installed in an area where the temperature can reach values around 0° C or drop below, remove the remaining water from the inlet hose and the drain pump.

1. Disconnect the mains plug from the mains socket.
2. Close the water tap.
3. Put the two ends of the inlet hose in a container and let the water flow out of the hose.
4. Empty the drain pump. Refer to the emergency drain procedure.
5. When the drain pump is empty, install the inlet hose again.

> ⚠ **WARNING!**
>
> Make sure that the temperature is higher than 0 °C before you use the appliance again.
> The manufacturer is not responsible for damages caused by low temperatures.

15. TROUBLESHOOTING

> ⚠ **WARNING!**
>
> Refer to Safety chapters.

15.1 Alarm Codes and Possible failures

The appliance does not start or it stops during operation. First try to find a solution to the problem (refer to the tables).

> ⚠ **WARNING!**
>
> Deactivate the appliance before carrying out any check.

With some problems, the acoustic signals operate. The **red** indicator of the button Avvio/Pausa flashes and one of the phase indicators comes on, to show an alarm code:

Problem	Possible solution
The appliance does not fill with water properly.	• Make sure that the water tap is open. • Make sure that the pressure of the water supply is not too low. For this information, contact your local water authority. • Make sure that the water tap is not clogged. • Make sure that the inlet hose has no kinks, damages or bends. • Make sure that the connection of the water inlet hose is correct. • Make sure that the filter of the inlet hose and the filter of the valve are not clogged. Refer to 'Care and cleaning'.
The appliance does not drain the water.	• Make sure that the sink spigot is not clogged. • Make sure that the drain hose has no kinks or bends. • Make sure that the drain filter is not clogged. Clean the filter, if necessary. Refer to "Care and cleaning". • Make sure that the connection of the drain hose is correct. • Set the drain programme if you set a programme without drain phase. • Set the drain programme if you set an option which ends with water in the tub.
The appliance door is open or not closed correctly.	• Make sure that the door is properly closed.
The indicator of button Avvio/Pausa flashes in red 11 times and 1 (or 2 or 3) time(s) in yellow: the mains supply is unstable. Wait until mains supply is stable.	

In case of different problem with the washing machine check the table below for possible solutions.

Problem	Possible solution
The programme does not start.	• Make sure that the mains plug is connected to the mains socket. • Make sure that the appliance door is closed. • Make sure that there is no damaged fuse in the fuse box. • Make sure that the Avvio/Pausa ▷‖ has been touched. • If the delay start is set, cancel the setting or wait for the end of countdown. • Deactivate the Child Lock function if it is on. • Check the position of the knob on the selected programme.
The appliance fills with water and drains immediately.	• Make sure that the drain hose is in the correct position. The hose may be positioned too low. Refer to "Installation instruction".
The spin phase does not operate or the washing cycle lasts longer than usual.	• Set the spin programme. • Make sure that the drain filter is not clogged. Clean the filter, if necessary. Refer to "Care and cleaning". • Adjust manually the items in the tub and start the spin phase again. This problem may be caused by balance problems.
There is water on the floor.	• Make sure that the couplings of the water hoses are tight and there is not water leakages. • Make sure that the water inlet hose and the drain hose have no damages. • Make sure you use the correct detergent and the correct quantity of it.

Problem	Possible solution
You cannot open the appliance door.	• Make sure that a washing programme that ends with water in tub, has been selected. • Make sure that the washing programme is finished. • Set the drain or the spin programme if there is water in the drum. • Make sure that the appliance receives electrical power. • This problem may be caused by a failure of the appliance. Contact the Authorised Service Centre.
The appliance makes an unusual noise and vibrates.	• Make sure the levelling of the appliance is correct. Refer to "Installation instruction". • Make sure that the packaging and/or the transit bolts are removed. Refer to "Installation instruction". • Add more laundry in the drum. The load may be too small.
The programme duration increases or decreases during programme execution.	• The SensiCare System is able to adjust the programme duration according to the type and the laundry load size. Refer to "The SensiCare System load detection" in "Daily Use" chapter.
The washing results are not satisfactory.	• Increase the detergent quantity or use a different detergent. • Use special products to remove the stubborn stains before you wash the laundry. • Make sure that you set the correct temperature. • Decrease the laundry load.
Too much foam in the drum during the washing cycle.	• Reduce the quantity of detergent.
After the washing cycle, there are some detergent residues in the dispenser drawer.	• Make sure that the flap is in the correct position. • Make sure you have used the detergent dispenser according the indications given in this user manual.

After the check, activate the appliance. The programme continues from the point of interruption.
If the problem occurs again, contact the Authorised Service Centre.
The necessary data for the service centre is on the rating plate.

16. CONSUMPTION VALUES

16.1 Introduction

ⓘ

See the web link **www.theenergylabel.eu** for detailed information about Energy Label.

ⓘ

The QR code on the energy label supplied with the appliance provides a web link to the information related to the performance of the appliance in the EU EPREL database. Keep the energy label for reference together with the user manual and all other documents provided with this appliance.
It is also possible to find the same information in EPREL using the link **https://eprel.ec.europa.eu** and the model name and product number that you find on the rating plate of the appliance. Refer to 'Product description' chapter for the position of the rating plate.

16.2 Legend

kg	Laundry load.	**hh:mm**	Programme duration.
kWh	Energy consumption.	**°C**	Temperature in the laundry.
Litres	Water consumption.	**rpm**	Spin speed.
%	Remaining moisture at the end of spinning phase. The higher is the spin speed, the higher is the noise and the lower is the remaining moisture.		

ⓘ

Values and programme duration may differ depending on different conditions (e.g. room temperature, water temperature and pressure, load size and type of laundry, supply voltage) and also if you change the default setting of a programme.

16.3 According to Commission Regulation Eu 2019/2023

Eco 40-60 programme	kg	kWh	Litres	hh:mm	%	°C	rpm[1)]
Full load	7.0	0.875	58.0	03:25	60.00	46.0	951
Half load	3.5	0.355	40.0	02:40	60.00	28.0	951
Quarter load	2.0	0.165	31.0	02:25	62.00	23.0	951

1) Maximum spin speed.

Power consumption in different modes

Off (W)	Stand-by (W)	Delay start (W)
0.50	0.50	4.00
Time to Off/Standby mode is 15 minutes maximum.		

16.4 Common programmes

ⓘ
These values are indicative only.

Programme	kg	kWh	Litres	hh:mm	%	°C	rpm 1)
Cotoni 2) 90°C	7.0	2.100	80.0	04:10	60.00	85.0	1000
Cotoni 60°C	7.0	1.200	80.0	04:00	60.00	55.0	1000
Cotoni 3) 20°C	7.0	0.300	80.0	02:45	60.00	20.0	1000
Sintetici 40°C	3.0	0.650	65.0	02:15	37.00	40.0	1000
Delicati 4) 30°C	1.5	0.400	50.0	01:10	37.00	30.0	1000
Lana 30°C	1.5	0.250	50.0	01:10	32.00	30.0	1000

1) Reference indicator of the spin speed.

2) Suitable for washing heavily soiled textiles.

3) Suitable for washing lightly soiled cottons, synthetic and mixed fabrics.

4) It also performs as quick washing cycle for lightly soiled laundry.

17. QUICK GUIDE

17.1 Daily use

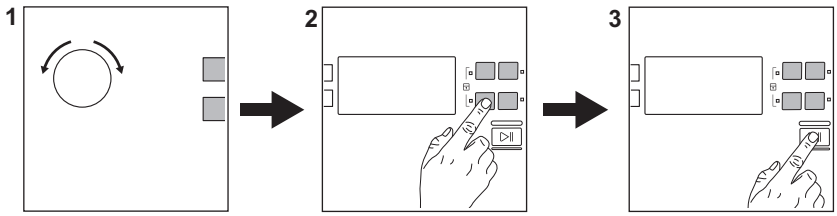

Connect the mains plug to the mains socket.

Open the water tap.

Load the laundry.

Pour the detergent and other treatment in the proper compartment of the detergent dispenser.

1. Turn the programme dial to set the desired programme.
2. Set the desired options by means of the corresponding touch buttons.
3. To start the programme, touch the **Avvio/ Pausa** ▷‖ button.

At the end of the programme, remove the laundry.

17.2 Cleaning the drain pump filter

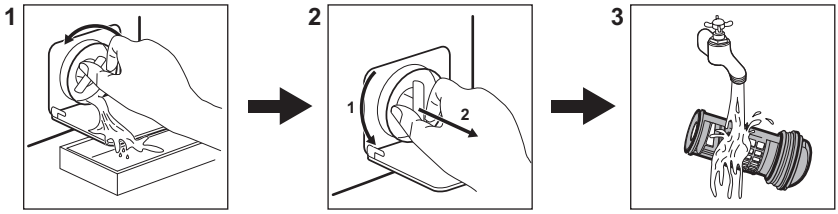

17.3 Programmes

Programmes	Load	Product description
Eco 40-60	7.0 kg	White and coloured cottons. Normally soiled garments.
Cotoni	7.0 kg	White cotton and coloured cotton.
Sintetici	3.0 kg	Synthetic items or mixed fabric items.
Delicati	1.5 kg	Delicate fabrics such as acrylics, viscose, polyester items.
Rapido 14'	1.5 kg	Cotton and synthetic lightly soiled items or once worn items.
Risciacquo	7.0 kg	All fabrics, except woollens and very delicate fabrics. Programme for rinsing and spinning.
Centrifuga/Scarico	7.0 kg	All fabrics, except woollens and very delicate fabrics. Programme for spinning and draining the water.
Vapore Anti-Allergy	7.0 kg	White cotton items. This programme helps to remove germs and bacteria.
Capi per Neonati	1.5 kg	Delicate cycle suitable for baby's articles.
Seta	0.5 kg	Special programme for silk and mixed synthetic items.
Lana	1.5 kg	Machine washable wool, hand washable wool and delicates.
Sport	3.0 kg	Sportswear.

Programmes	Load	Product description
Outdoor	2.0 kg **1)** 1.0 kg **2)**	Modern outdoor sporting garments.
Denim	2.0 kg	Denim clothing.

1) Washing programme.

2) Washing programme and waterproofing phase.

18. ENVIRONMENTAL CONCERNS

Recycle materials with the symbol . Put the packaging in relevant containers to recycle it. Help protect the environment and human health by recycling waste of electrical and electronic appliances. Do not dispose of appliances marked with the symbol with the household waste. Return the product to your local recycling facility or contact your municipal office.

electrolux.com

155285610-A-512023

