AEG

aeg.com/register

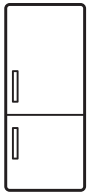

ORC7P321DW
ORC7P321DX

EN User Manual | **Fridge Freezer**

Welcome to AEG! Thank you for choosing our appliance.



Get usage advice, brochures, trouble shooter, service and repair information:
www.aeg.com/support

Subject to change without notice.

CONTENTS

1. SAFETY INFORMATION..... 2
2. SAFETY INSTRUCTIONS..... 4
3. INSTALLATION..... 6
4. OPERATION..... 9
5. DAILY USE..... 11
6. HINTS AND TIPS..... 16
7. CARE AND CLEANING..... 18
8. TROUBLESHOOTING..... 19
9. NOISES..... 22
10. TECHNICAL DATA..... 22
11. INFORMATION FOR TEST INSTITUTES..... 22
12. ENVIRONMENTAL CONCERNS..... 23

1. ⚠ SAFETY INFORMATION

Before the installation and use of the appliance, carefully read the supplied instructions. The manufacturer is not responsible for any injuries or damage that are the result of incorrect installation or usage. Always keep the instructions in a safe and accessible location for future reference.

1.1 Children and vulnerable people safety

- This appliance can be used by children aged from 8 years and above and persons with reduced physical, sensory or mental capabilities or lack of experience and knowledge if they have been given supervision or instruction concerning the use of the appliance in a safe way and understand the hazards involved. Children aged from 3 to 8 years and persons with very extensive and complex disabilities are allowed to load and unload the appliance provided that they have been properly instructed. Children of less than 3 years

of age should be kept away from the appliance unless continuously supervised.
- Children should be supervised to ensure that they do not play with the appliance.
- Children shall not carry out cleaning and user maintenance of the appliance without supervision.
- Keep all packaging away from children and dispose of it appropriately.

1.2 General Safety

- This appliance is for storing food and beverages only.
- This appliance is designed for single household domestic use in an indoor environment.
- This appliance may be used in, offices, hotel guest rooms, bed & breakfast guest rooms, farm guest houses and other similar accommodation where such use does not exceed (average) domestic usage levels.
- To avoid contamination of food respect the following instructions:
  - do not open the door for long periods;
  - clean regularly surfaces that can come in contact with food and accessible drainage systems;
  - store raw meat and fish in suitable containers in the refrigerator, so that it is not in contact with or drip onto other food.
- WARNING: Keep ventilation openings, in the appliance enclosure or in the built-in structure, clear of obstruction.
- WARNING: Do not use mechanical devices or other means to accelerate the defrosting process, other than those recommended by the manufacturer.
- WARNING: Do not damage the refrigerant circuit.
- WARNING: Do not use electrical appliances inside the food storage compartments of the appliance, unless they are of the type recommended by the manufacturer.
- Do not use water spray and steam to clean the appliance.

- Clean the appliance with a moist soft cloth. Only use neutral detergents. Do not use abrasive products, abrasive cleaning pads, solvents or metal objects.
- When the appliance is empty for long period, switch it off, defrost, clean, dry and leave the door open to prevent mould from developing within the appliance.
- Do not store explosive substances such as aerosol cans with a flammable propellant in this appliance.
- If the supply cord is damaged, it must be replaced by the manufacturer, its Authorised Service Centre or similarly qualified persons in order to avoid a hazard.

2. SAFETY INSTRUCTIONS

2.1 Installation

⚠ WARNING!

Only a qualified person must install this appliance.

- Remove all the packaging.
- Do not install or use a damaged appliance.
- Follow the installation instructions supplied with the appliance.
- Always take care when moving the appliance as it is heavy. Always use safety gloves and enclosed footwear.
- Make sure the air can circulate around the appliance.
- At first installation or after reversing the door wait at least 4 hours before connecting the appliance to the power supply. This is to allow the oil to flow back in the compressor.
- Before carrying out any operations on the appliance (e.g. reversing the door), remove the plug from the power socket.
- Do not install the appliance close to radiators or cookers, ovens, or hobs, unless otherwise specified in the installation instructions.
- Do not expose the appliance to the rain.
- Do not install the appliance where there is direct sunlight.
- Do not install this appliance in areas that are too humid or too cold.
- When you move the appliance, lift it by the front edge to avoid scratching the floor.

2.2 Electrical connection

⚠ WARNING!

Risk of fire and electric shock.

⚠ WARNING!

When positioning the appliance, ensure the supply cord is not trapped or damaged.

⚠ WARNING!

Do not use multi-plug adapters and extension cables.

- The appliance must be earthed.
- Make sure that the parameters on the rating plate are compatible with the electrical ratings of the mains power supply.
- Always use a correctly installed shockproof socket.
- Make sure not to cause damage to the electrical components (e.g. mains plug, mains cable, compressor). Contact the Authorised Service Centre or an electrician to change the electrical components.
- The mains cable must stay below the level of the mains plug.

- Connect the mains plug to the mains socket only at the end of the installation. Make sure that there is access to the mains plug after the installation.
- Do not pull the mains cable to disconnect the appliance. Always pull the mains plug.

2.3 Use

⚠ WARNING!

Risk of injury, burns, electric shock or fire.

 The appliance contains flammable gas, isobutane (R600a), a natural gas with a high level of environmental compatibility. Be careful not to cause damage to the refrigerant circuit containing isobutane.

- Do not change the specification of this appliance.
- Do not put electrical appliances (e.g. ice cream makers) in the appliance unless they are stated applicable by the manufacturer.
- If damage occurs to the refrigerant circuit, make sure that there are no flames and sources of ignition in the room. Ventilate the room.
- Do not let hot items to touch the plastic parts of the appliance.
- Do not put soft drinks in the freezer compartment. This will create pressure on the drink container.
- Do not store flammable gas and liquid in the appliance.
- Do not put flammable products or items that are wet with flammable products in, near or on the appliance.
- Do not touch the compressor or the condenser. They are hot.
- Do not remove or touch items from the freezer compartment if your hands are wet or damp.
- Do not freeze again food that has been thawed.
- Follow the storage instructions on the packaging of frozen food.
- Wrap the food in any food contact material before putting it in the freezer compartment.
- Do not allow food to come in contact with the inner walls of the appliance compartments.

2.4 Internal lighting

⚠ WARNING!

Risk of electric shock.

- This product contains one or more light sources of energy efficiency class F.
- Concerning the lamp(s) inside this product and spare part lamps sold separately: These lamps are intended to withstand extreme physical conditions in household appliances, such as temperature, vibration, humidity, or are intended to signal information about the operational status of the appliance. They are not intended to be used in other applications and are not suitable for household room illumination.

2.5 Care and cleaning

⚠ WARNING!

Risk of injury or damage to the appliance.

- Before maintenance, deactivate the appliance and disconnect the mains plug from the mains socket.
- This appliance contains hydrocarbons in the cooling unit. Only a qualified person must do the maintenance and the recharging of the unit.
- Regularly examine the drain of the appliance and if necessary, clean it. If the drain is blocked, defrosted water collects in the bottom of the appliance.

2.6 Service

- To repair the appliance contact the Authorised Service Centre. Use original spare parts only.
- Please note that self-repair or non-professional repair can have safety consequences and might void the guarantee.
- The following spare parts are available for at least 7 years after the model has been discontinued: thermostats, temperature sensors, printed circuit boards, light

sources, door handles, door hinges, trays and baskets. Door gaskets are available for at least 10 years after the model has been discontinued. The duration may be longer in your country. For further information, please visit our website.
- Please note that some of these spare parts are only available to professional repairers, and that not all spare parts are relevant for all models.

2.7 Disposal

⚠ WARNING!
Risk of injury or suffocation.

- Disconnect the appliance from the mains supply.
- Cut off the mains cable and discard it.
- Remove the door to prevent children and pets to be closed inside of the appliance.
- The refrigerant circuit and the insulation materials of this appliance are ozone-friendly.
- The insulation foam contains flammable gas. Contact your municipal authority for information on how to discard the appliance correctly.
- Do not cause damage to the part of the cooling unit that is near the heat exchanger.

3. INSTALLATION

⚠ WARNING!
Refer to Safety chapters.

3.1 Dimensions

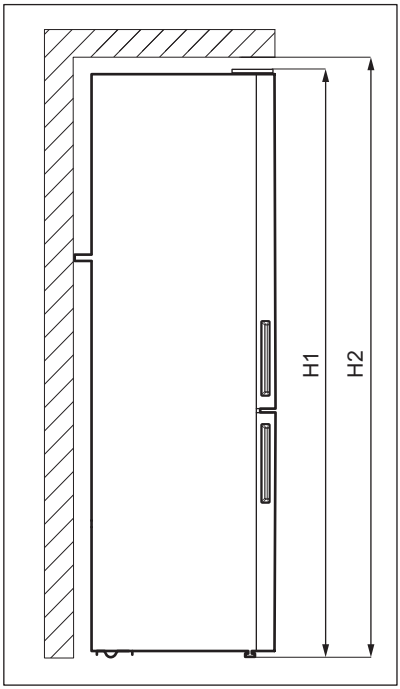

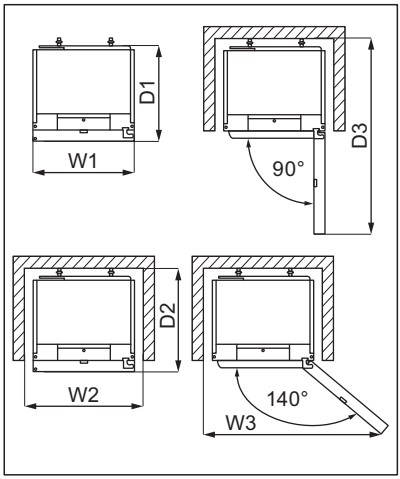

Overall dimensions [1]		
H1	mm	1870
W1	mm	595
D1	mm	639

[1] the height, width and depth of the appliance without the handle

Space required in use [2]		
H2	mm	1900
W2	mm	600
D2	mm	700

[2] the height, width and depth of the appliance including the handle, plus the space necessary for free circulation of the cooling air

Overall space required in use [3]		
H2	mm	1900
W3	mm	1031
D3	mm	1256

[3] the height, width and depth of the appliance including the handle, plus the space necessary for free circulation of the cooling air, plus the space necessary to allow door opening to the minimum angle permitting removal of all internal equipment

3.2 Location

This appliance is not intended to be used as a built-in appliance.

In case of different installation from freestanding respecting space required in use dimensions, the appliance will function correctly but energy consumption might increase slightly.

To ensure appliance's best functionality, you should not install the appliance in the place with direct sunlight. Do not install the appliance close to the heat source (oven, stoves, radiators, cookers, hoods, hobs or extractor hobs) unless otherwise specified in the installation instruction. Make sure that air can circulate freely around the back of the cabinet.

This appliance should be installed in a dry, well ventilated indoor position.

To ensure best performance, if the appliance is positioned below an overhanging wall unit, the minimum distance between the top of the cabinet shall be maintained. Ideally, however, the appliance should not be positioned below overhanging wall units. One or more adjustable feet at the base of the cabinet ensure that the appliance stands level.

⚠ CAUTION!

If you position the appliance against the wall, use back spacers provided or keep the minimum distance indicated in the installation instructions.

⚠ CAUTION!

If you install the appliance next to a wall, refer to the installation instructions to understand the minimum distance between the wall and the side of the appliance where door hinges are to provide enough space to open the door when the internal equipment is removed (e.g. when cleaning).

This appliance is intended to be used at ambient temperature ranging from 10°C to 43°C.

ⓘ

The correct operation of the appliance can only be guaranteed within the specified temperature range.

ⓘ

If you have any doubts regarding where to install the appliance, please turn to the vendor, to our customer service or to the nearest Authorised Service Centre.

ⓘ

It must be possible to disconnect the appliance from the mains power supply. The plug must therefore be easily accessible after installation.

3.3 Electrical Connection

⚠ CAUTION!

Any electrical work required to install this appliance should be carried out by a qualified electrician or competent person.

⚠ WARNING!

This appliance must be earthed.
The manufacturer declines any liability should these safety measures not be observed.

The wires in the mains lead are coloured in accordance with the following code:

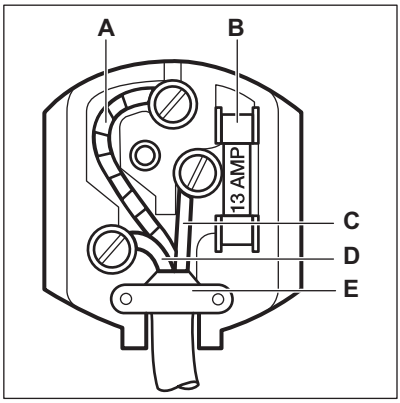

- **A** - green and yellow: Earth
- **C** - brown: Live
- **D** - blue: Neutral

As the colours of the wires in the mains lead of this appliance may not correspond with the coloured markings identifying the terminals in your plug, proceed as follows:

1. Connect the wire coloured green and yellow to the terminal marked either with the letter “E“ or by the earth symbol ⏚ or coloured green and yellow.
2. Connect the wire coloured blue to the terminal either marked with the letter “N“ or coloured black.
3. Connect the wire coloured brown to the terminal either marked with the “L“ or coloured red.
4. Check that no cut, or stray strands of wire is present and the cord clamp (**E**) is secure over the outer sheath.
   Make sure the electricity supply voltage is the same as that indicated on the appliance rating plate.
5. Switch on the appliance.

The appliance is supplied with a 13 amp fuse (**B**). In the event of having to change the fuse in the plug supplied, a 13 amp ASTA approved (BS 1362) fuse must be used.

⚠ WARNING!

A cut off plug inserted into a 13 amp socket is a serious safety (shock) hazard. Ensure that it is disposed of safely.

3.4 Levelling

ⓘ

Door alignment depends on proper levelling.

It is advisable to empty the appliance before carrying out this operation.

When placing the appliance ensure that it stands level. This can be achieved by two adjustable feet at the bottom in front.

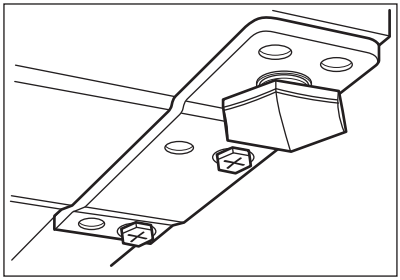

3.5 Rear spacers

ⓘ

Please refer to the separate document with instructions on installation and door reversal.

⚠ CAUTION!

If you position the appliance against the wall in a freestanding installation, install the rear spacers in order to guarantee the minimum distance required for air circulation. Use the provided rear spacers as indicated in the Installation Instruction.

3.6 Door reversibility

Please refer to the separate document with instructions on installation and door reversal.

⚠ CAUTION!

At every stage of reversing the door protect the floor from scratching with a durable material.

4. OPERATION

4.1 Control panel

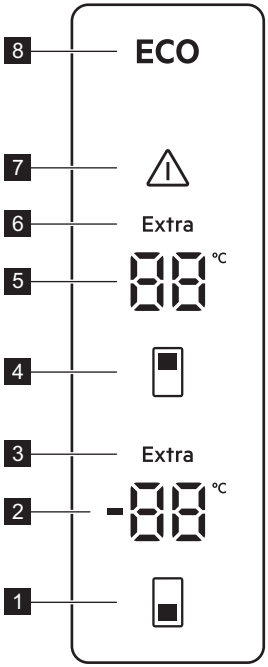

1. Freezer temperature button
2. Freezer compartment indicator
3. Extra Freeze indicator
4. Fridge temperature button
5. Fridge compartment indicator
6. Extra Cool indicator
7. Alarm indicator
8. ECOMETER indicator

4.2 Switching on

1. Connect the mains plug to the power socket.
2. Press and hold the Freezer temperature and Fridge temperature buttons for 10 seconds.

The display shows blinking On indication.

4.3 Switching off

1. Press and hold the Freezer temperature and Fridge temperature buttons for 10 seconds.

The display shows blinking OF indicator.

2. The appliance is switched off and a steady OF indication substitutes the fridge temperature. Disconnect the mains plug from the power socket.

4.4 Temperature regulation

Set the temperature of the appliance by pressing the temperature buttons. Recommended set temperatures are:

- +4°C for the fridge
- -18°C for the freezer

The temperature range may vary between -15 and -24°C for freezer and between 2 and 8°C for fridge.

ⓘ

The temperature indicators show the set temperature. The set temperature will be reached within 24 hours. After a power failure the set temperature remains stored.

ⓘ

ECO indicator LED light is on when the recommended temperature or level is set.

ⓘ

Switch off the Extra Freeze function before setting a different freezer temperature level.

4.5 ECO function

The ECO function ensures minimum energy consumption with the optimal temperature for food preservation.

During this mode:

- The set temperature of the fridge compartment is 4°C.
- The set temperature of the freezer compartment is -18°C.

To deactivate the ECO function:

- set a different temperature. Refer to "Temperature regulation".
- activate the Extra Cool and Extra Freeze functions.

4.6 Extra Cool function

If you need to insert a large amount of food at ambient temperature in the fridge compartment, for example after grocery shopping, activate the Extra Cool function. This function accelerates cooling and prevents the stored food from warming up.

To activate the function, press and hold the Fridge temperature button until the Extra Cool indicator lights up.

The function stops automatically after approximately 6 hours.

To deactivate the Extra Cool function before its automatic end, press and hold the Fridge temperature button until the Extra Cool indicator turns off.

To set a different fridge temperature, turn off the Extra Cool function. Refer to "Temperature regulation" section.

4.7 Extra Freeze function

The Extra Freeze function performs pre-freezing and fast freezing in sequence in the freezer compartment. This function accelerates the freezing of fresh food and protects the food already stored from warming up.

ⓘ

To freeze fresh food activate the Extra Freeze function at least 4 hours before placing the food to complete pre-freezing.

To activate the Extra Freeze function, press and hold the Freezer temperature button until Extra Freeze indicator lights up.

This function stops automatically after 24 hours.

To deactivate the Extra Freeze function before its automatic end, press and hold the Freezer temperature button until Extra Freeze indicator turns off.

4.8 Door open alarm

If the fridge or the freezer door is left open for approximately 5 minutes the alarm activates. During the alarm:

- the sound is on,
- temperature indicators flash,
- the alarm indicator flashes.

The internal fridge light may be flashing.

The alarm stops after closing the door.

You can switch off the alarm by pressing any button.

ⓘ

The sound switches off automatically after 1 hour.

4.9 High temperature alarm

ⓘ

The alarm activates when you plug the appliance for the first time.

Freezer compartment

The alarm activates when the freezer compartment temperature is too high.

During the alarm:

- the display shows blinking **E09**,
- the alarm indicator flashes,
- the alarm sound is on.

Turning off the alarm

- Press any button on the control panel to turn off the alarm. The alarm indicator and sound turn off. The display shows **E09** for 5 seconds and then the current freezer temperature is displayed.
- The alarm sound turns off automatically after 1 hour. If the temperature is still too high, the alarm activates again.
- Once the temperature is back to the set value, the alarm turns off and the normal display restores.

4.10 Rest mode

The Rest mode ensures optimal food preservation while minimizing energy consumption during periods of non-operation.

To enable the Rest mode, press and hold freezer temperature button for 5 seconds. The display shows:

- rn on the Freezer temperature indicator,
- oF on the Fridge temperature indicator.

Tap Freezer temperature button to switch the Rest mode on or off. The Freezer temperature indicator changes to on for the enabled or oF for the disabled Rest mode.

The Rest mode activates after 3 days without any interaction with the appliance. The Rest mode deactivates automatically after any interaction with the appliance.

5. DAILY USE

5.1 Positioning the door shelves

To permit storage of food packages of various sizes, the door shelves can be placed at different heights.

1. Gradually pull the shelf up until it comes free.
2. Reposition as required.

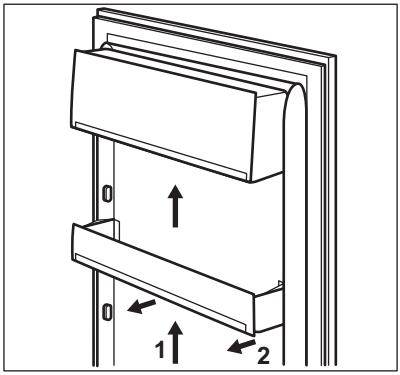

5.2 Movable shelves

The walls of the refrigerator are equipped with a series of runners so that the shelves can be positioned as desired.

This appliance is also equipped with a shelf consisting of two parts. The front half of the shelf can be placed under the second half to make better use of space.

To fold the shelf:

1. Take out the front half gently.
2. Slide it into the lower rail and under the second half.

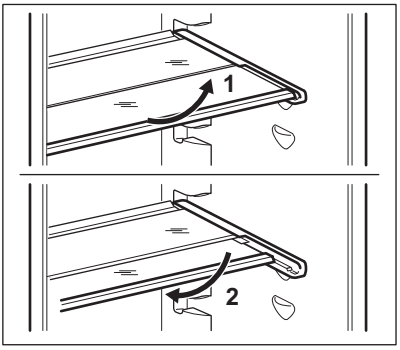

ⓘ

Do not move the glass shelf above the vegetable drawer to ensure correct air circulation.

5.3 GreenZone drawer

There is a pull-out drawer in the bottom part of the refrigerator compartment.

The glass shelf of the GreenZone is fitted with a device that regulates its sealing and provides for optimal humidity inside the drawer.

5.4 Removing GreenZone drawer

ⓘ

It is recommended to empty the drawer before removing it from the refrigerator.

To remove the drawer:

1. Pull out the drawer from the refrigerator.

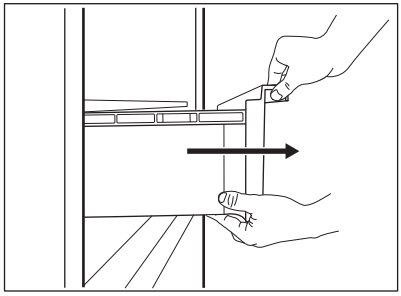

2. Lift up the front of the drawer.

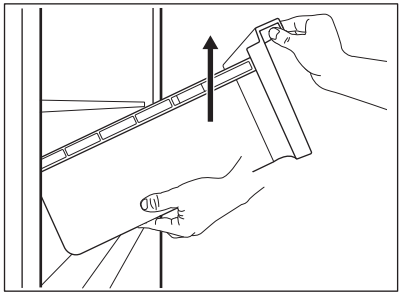

3. Pull the drawer out while lifting it up.

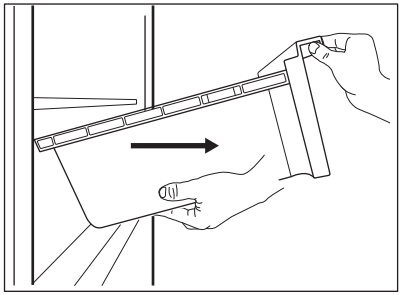

To remove the glass cover of the GreenZone drawer:

1. Unlock lateral gripping from both sides simultaneously.

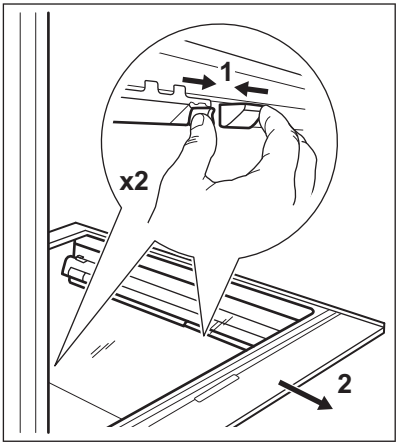

2. Pull the glass shelf support towards yourself.

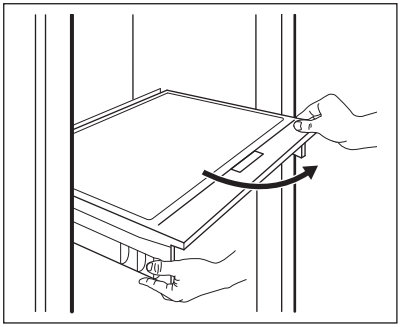

5.5 Removing ExtraChill

There is a drawer above the GreenZone drawer.

To remove the drawer:

1. Pull out the drawer from the refrigerator.

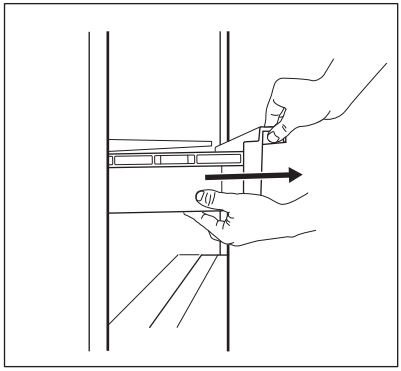

2. Lift up the front of the drawer.

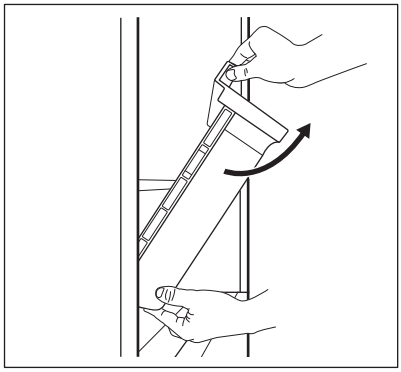

3. Lift and turn the drawer to pull it out of the appliance.

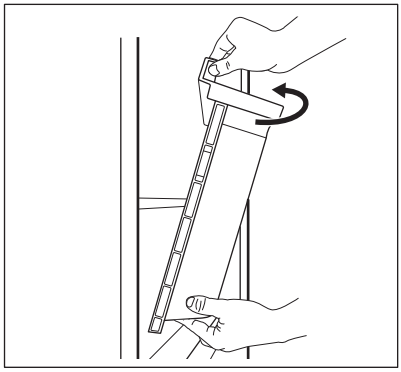

The shelf above the drawer can be removed from the appliance only for cleaning purpose.

5.6 Humidity control

The glass shelf of the GreenZone drawer features a device that regulates its sealing and provides for optimal humidity inside the drawer.

ⓘ

Do not place any food products on the humidity control device.

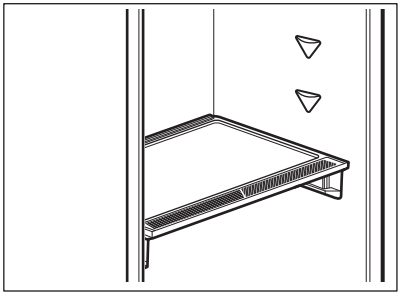

To remove the humidity control device:

1. Open the drawer below the glass shelf and pull out the cover.

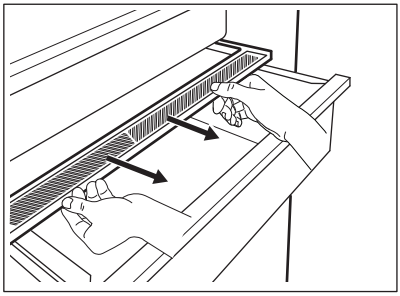

2. If you need to replace the device's white membrane, grab the device in the middle and separate the membrane from the cover by pulling the cover.

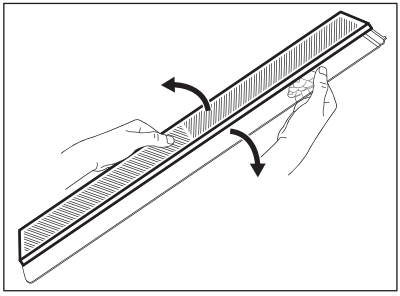

3. Assemble a new membrane into the cover by pressing the edge of the membrane into the cover.

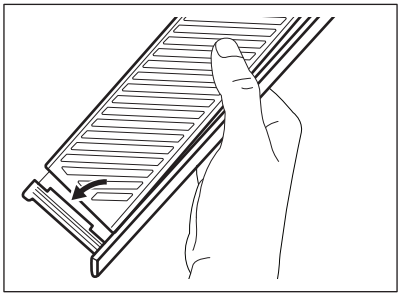

4. Reassemble the humidity control back on the drawer.

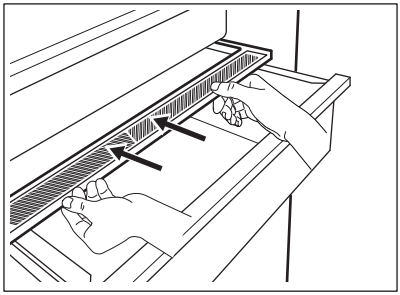

ⓘ

Depending on the quantity and condition of fruit and vegetables stored in the GreenZone drawer, condensation may occur.
In such a case, remove the condensation using a soft cloth.

5.7 MULTIFLOW

The refrigerator compartment is equipped with the MULTIFLOW device that allows for rapid and more effective cooling of food and maintaining a more uniform temperature in each part of the refrigerator compartment.

This device activates automatically when needed.

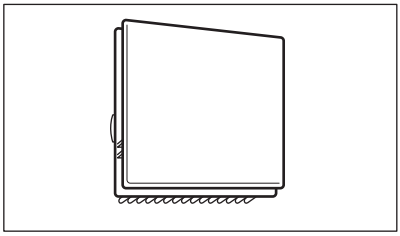

MULTIFLOW operates only when the door is closed.

ⓘ

Do not block the air vents to allow better cooling.

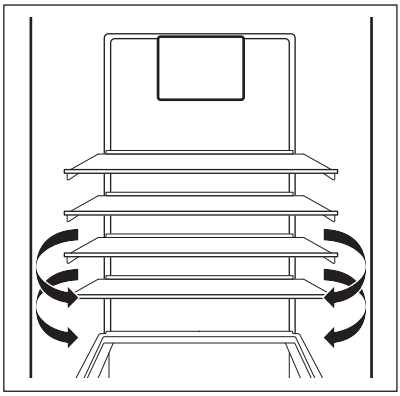

ⓘ

Do not remove the MULTIFLOW panel. Do not use water spray or steam to clean the appliance. For cleaning instructions, refer to the "Care and cleaning" chapter.

5.8 Freezing fresh food

The freezer compartment is suitable for freezing fresh food and storing frozen and deep-frozen food for a long time.

To freeze fresh food activate the Extra Freeze function at least 4 hours before placing the food to be frozen in the freezer compartment.

Store the fresh food evenly distributed in the first compartment or drawer from the top.

The maximum amount of food that can be frozen without adding other fresh food during 24 hours is specified on the rating plate (a label located inside the appliance).

When the freezing process is complete, the appliance returns to the previously set temperature (see "Extra Freeze" function).

For more information refer to "Hints for freezing

5.9 Storage of frozen food

When activating an appliance for the first time or after a period out of use, before putting the products in the compartment let the appliance run at least 3 hours with the Extra Freeze function switched on.

The freezer drawers ensure that it is quick and easy to find the food package you want. If large quantities of food are to be stored, remove all drawers, except for the bottom drawer which needs to be in place to provide good air circulation.

Keep the food on the shelves no closer than 15 mm from the door.

⚠ **CAUTION!**

In the event of accidental defrosting, for example due to a power failure, if the power has been off for longer than the value shown on rating plate under "rising time", the defrosted food must be consumed quickly or cooked immediately then cooled and then re-frozen.

5.10 Thawing

Deep-frozen or frozen food, prior to being used, can be thawed in the refrigerator compartment or at room temperature, depending on the time available for this operation.

Small pieces may even be cooked still frozen, directly from the freezer: in this case, cooking will take longer.

5.11 Ice-cube production

This appliance is equipped with one or more trays for the production of ice-cubes.

ⓘ

Do not use metallic instruments to remove the trays from the freezer.

1. Fill these trays with water.
2. Put the ice trays in the freezer compartment.

6. HINTS AND TIPS

6.1 Hints for energy saving

- Freezer: The internal configuration of the appliance is the one that ensures the most efficient use of energy.
- Fridge: Most efficient use of energy is ensured in the configuration with the drawers in the bottom part of the appliance and shelves evenly distributed. Position of the door bins does not affect energy consumption.
- Do not open the door frequently or leave it open longer than necessary.
- Freezer: The colder the temperature setting, the higher the energy consumption.
- Fridge: Do not set too high temperature to save energy unless it is required by the characteristics of the food.
- If the ambient temperature is high and the temperature control is set to low temperature and the appliance is fully loaded, the compressor may run continuously, causing frost or ice formation on the evaporator. In this case, set the temperature control toward higher temperature to allow automatic defrosting and to save energy this way.
- Ensure a good ventilation. Do not cover the ventilation grilles or holes.
- Make sure that food products inside the appliance allow air circulation through dedicated holes in the rear interior of the appliance.

6.2 Hints for freezing

- Activate Extra Freeze function at least 4 hours before placing the food inside the freezer compartment.
- Before freezing wrap and seal fresh food in: aluminium foil, plastic film or bags, airtight containers with lid.
- For more efficient freezing and thawing divide food into small portions.
- It is recommended to put labels and dates on all your frozen food. This will help to identify foods and to know when they should be used before their deterioration.
- The food should be fresh when being frozen to preserve good quality. Especially fruits and vegetables should be frozen after the harvest to preserve all of their nutrients.
- Do not freeze bottles or cans with liquids, in particular drinks containing carbon dioxide - they may explode during freezing.
- Do not put hot food in the freezer compartment. Cool it down at room temperature before placing it inside the compartment.
- To avoid increase in temperature of already frozen food, do not place fresh unfrozen food directly next to it. Place food at room temperature in the part of the freezer compartment where there is no frozen food.
- Do not eat ice cubes, water ices or ice lollies immediately after taking them out of the freezer. Risk of frostbites.
- Do not re-freeze defrosted food. If the food has defrosted, cook it, cool it down and then freeze it.

6.3 Hints for storage of frozen food

- Freezer compartment is the one marked with ✳ ✳✳✳.
- Higher temperature setting inside the appliance may lead to shorter shelf life.
- The whole freezer compartment is suitable for storage of frozen food products.
- Leave enough space around the food to allow air to circulate freely.
- For adequate storage refer to food packaging label to see the shelf life of food.

- It is important to wrap the food in such a way that prevents water, humidity or condensation from getting inside.

6.4 Shopping tips

After grocery shopping:

- Ensure that the packaging is not damaged - the food could be deteriorated. If the package is swollen or wet, it might have not been stored in the optimal conditions and defrosting may have already started.
- To limit the defrosting process buy frozen goods at the end of your grocery shopping and transport them in a thermal and insulated cool bag.
- Place the frozen foods immediately in the freezer after coming back from the shop.
- If food has defrosted even partially, do not re-freeze it. Consume it as soon as possible.
- Respect the expiry date and the storage information on the package.

6.5 Shelf life for freezer compartment

Type of food	Shelf life (months)
Bread	3
Fruits (except citrus)	6 - 12
Vegetables	8 - 10
Leftovers without meat	1 - 2
Dairy food:	
Butter	6 - 9
Soft cheese (e.g. mozzarella)	3 - 4
Hard cheese (e.g. parmesan, cheddar)	6
Seafood:	
Fatty fish (e.g. salmon, mackerel)	2 - 3
Lean fish (e.g. cod, flounder)	4 - 6
Shrimps	12
Shucked clams and mussels	3 - 4
Cooked fish	1 - 2
Meat:	
Poultry	9 - 12
Beef	6 - 12
Pork	4 - 6
Lamb	6 - 9
Sausage	1 - 2
Ham	1 - 2
Leftovers with meat	2 - 3

6.6 Hints for fresh food refrigeration

- Good temperature setting that ensures preservation of fresh food is a temperature less than or equal to +4°C.
  Higher temperature setting inside the appliance may lead to shorter shelf life of food.
- Cover the food with packaging to preserve its freshness and aroma.
- Always use closed containers for liquids and for food, to avoid flavours or odours in the compartment.
- To avoid the cross-contamination between cooked and raw food, cover the cooked food and separate it from the raw one.
- It is recommended to defrost the food inside the fridge.
- Do not insert hot food inside the appliance. Make sure it has cooled down at room temperature before inserting it.

- To prevent food waste the new stock of food should always be placed behind the old one.

6.7 Hints for food refrigeration

- Fresh food compartment is the one marked (on the rating plate) with .
- Meat (all types): wrap in a suitable packaging and place it on the glass shelf above the vegetable drawer. Store meat for at most 1-2 days.
- Fruit and vegetables: clean thoroughly (eliminate the soil) and place in a special drawer (vegetable drawer).
- It is advisable not to keep the exotic fruits like bananas, mangos, papayas etc. in the refrigerator.
- Vegetables like tomatoes, potatoes, onions, and garlic should not be kept in the refrigerator.
- Butter and cheese: place in an airtight container or wrap in an aluminium foil or a polythene bag to exclude as much air as possible.
- Bottles: close them with a cap and place them on the door bottle shelf, or (if available) on the bottle rack.
- Always refer to the expiry date of the products to know how long to keep them.

7. CARE AND CLEANING

⚠ WARNING!

Refer to Safety chapters.

7.1 General warnings

⚠ CAUTION!

Unplug the appliance before carrying out any maintenance operation.

ⓘ

This appliance contains hydrocarbons in its cooling unit; maintenance and recharging must therefore only be carried out by authorized technicians.

ⓘ

The accessories and parts of the appliance are not suitable for washing in a dishwasher.

7.2 Cleaning the interior

Before using the appliance for the first time, the interior and all internal accessories should be washed with lukewarm water and some neutral detergent to remove the typical smell of a brand-new product, then dried thoroughly.

⚠ CAUTION!

Do not use detergents, abrasive powders, chlorine or oil-based cleaners as they will damage the finish.

⚠ CAUTION!

The accessories and parts of the appliance are not suitable for washing in a dishwasher.

⚠ CAUTION!

Clean the control panel with a moist cloth. Do not use any detergents. After cleaning, wipe the control panel dry with a soft cloth.

7.3 Periodic cleaning

⚠ CAUTION!

Do not pull, move or damage any pipes and/or cables inside the appliance.

⚠ CAUTION!

Do not damage the cooling system.

⚠ CAUTION!

When moving the cabinet, lift by the front edge to avoid scratching the floor.

Clean the equipment regularly:

1. Clean the inside and accessories with lukewarm water and some neutral detergent.
2. Regularly check the door seals and wipe them clean to ensure they are clean and free from debris.
3. Rinse and dry thoroughly.

The lowest shelf, dividing the cooler compartment from the rest of the cabinet, can be removed only for cleaning. Pull out the shelf straight to remove it. The cover plates above the drawers in the compartment can be taken out for cleaning.

7.4 Defrosting of the freezer

The freezer compartment is frost free. This means that there is no build up of frost when it is in operation, neither on the internal walls, nor on the foods.

7.5 Defrosting of the fridge

Defrosting of the fridge compartment is automatic. The water that condenses flows into a recipient on the compressor and evaporates. The recipient cannot be removed.

7.6 Periods of non-operation

When the appliance is not in use for long periods, take the following precautions:

1. Disconnect the appliance from electricity supply.
2. Remove all food.
3. Clean the appliance and all accessories.
4. Leave the doors open to prevent unpleasant smells.

8. TROUBLESHOOTING

⚠ WARNING!

Refer to Safety chapters.

8.1 What to do if...

Problem	Possible cause	Solution
The appliance does not operate.	The appliance is switched off.	Switch on the appliance.
	The mains plug is not connected to the mains socket correctly.	Connect the mains plug to the mains socket correctly.
	There is no voltage in the mains socket.	Connect a different electrical appliance to the mains socket. Contact a qualified electrician.
The appliance is noisy.	The appliance is not supported properly.	Check if the appliance stands stable.
Acoustic or visual alarm is on.	The cabinet has been recently switched on.	Refer to "High temperature alarm".
	The temperature in the appliance is too high.	Refer to "High temperature alarm".
Acoustic or visual alarm is on.	The door is left open.	Close the door.
The compressor operates continually.	Temperature is set incorrectly.	Refer to "Control panel" chapter.
	Many food products were put in at the same time.	Wait a few hours and then check the temperature again.

Problem	Possible cause	Solution
	The room temperature is too high.	Refer to "Installation" chapter.
	Food products placed in the appliance were too warm.	Allow food products to cool to room temperature before storing.
	The door is not closed correctly.	Refer to "Closing the door" section.
	The Extra Freeze function is switched on.	Refer to "Extra Freeze function" section.
	The Extra Cool function is switched on.	Refer to "Extra Cool function" section.
The compressor does not start immediately after pressing the "Extra Freeze" or "Extra Cool", or after changing the temperature.	The compressor starts after a period of time.	This is normal, no error has occurred.
Door is misaligned or interferes with ventilation grill.	The appliance is not levelled.	Refer to installation instructions.
Door does not open easily.	You attempted to re-open the door immediately after closing.	
The lamp does not work.	The lamp is in stand-by mode.	Close and open the door.
	The lamp is defective.	Contact the nearest Authorized Service Centre.
There is too much frost and ice.	The door is not closed correctly.	Refer to "Closing the door" section.
	The gasket is deformed or dirty.	Refer to "Closing the door" section.
	Food products are not wrapped properly.	Wrap the food products better.
	Temperature is set incorrectly.	Refer to "Control panel" chapter.
	Appliance is fully loaded and is set to the lowest temperature.	Set a higher temperature. Refer to "Control panel" chapter.
	Temperature set in the appliance is too low and the ambient temperature is too high.	Set a higher temperature. Refer to "Control panel" chapter.
Water flows on the rear plate of the refrigerator.	During the automatic defrosting process, frost melts on the rear plate.	This is correct.
There is too much condensed water on the rear wall of the refrigerator.	Door was opened too frequently.	Open the door only when necessary.
	Door was not closed completely.	Make sure the door is closed completely.
	Stored food was not wrapped.	Wrap food in suitable packaging before storing it in the appliance.

Problem	Possible cause	Solution
Temperature cannot be set.	The Extra Freeze function or Extra Cool function is switched on.	Switch off Extra Freeze function or Extra Cool function manually, or wait until the function deactivates automatically to set the temperature. Refer to "Extra Freeze function" or "Extra Cool function" section.
The temperature in the appliance is too low/too high.	The temperature is not set correctly.	Set a higher/lower temperature.
	The door is not closed correctly.	Refer to "Closing the door" section.
	The food products' temperature is too high.	Let the food products temperature decrease to room temperature before storage.
	Many food products are stored at the same time.	Store less food products at the same time.
	The door has been opened often.	Open the door only if necessary.
	The Extra Freeze function is switched on.	Refer to "Extra Freeze function" section.
	The Extra Cool function is switched on.	Refer to "Extra Cool function" section.
	There is no cold air circulation in the appliance.	Make sure that there is cold air circulation in the appliance. Refer to "Hints and tips" chapter.

ⓘ

If the advice does not lead to the desired result, call the nearest Authorized Service Centre.

8.2 Replacing the lamp

The appliance is equipped with a longlife LED interior light.

Only service is allowed to replace the lighting device. Contact your Authorised Service Centre.

8.3 Closing the door

1. Clean the door gaskets.
2. If necessary, adjust the door. Refer to the "Installation" chapter.
3. If necessary, replace the defective door gaskets. To obtain more information, contact the Authorised Service Centre.

9. NOISES

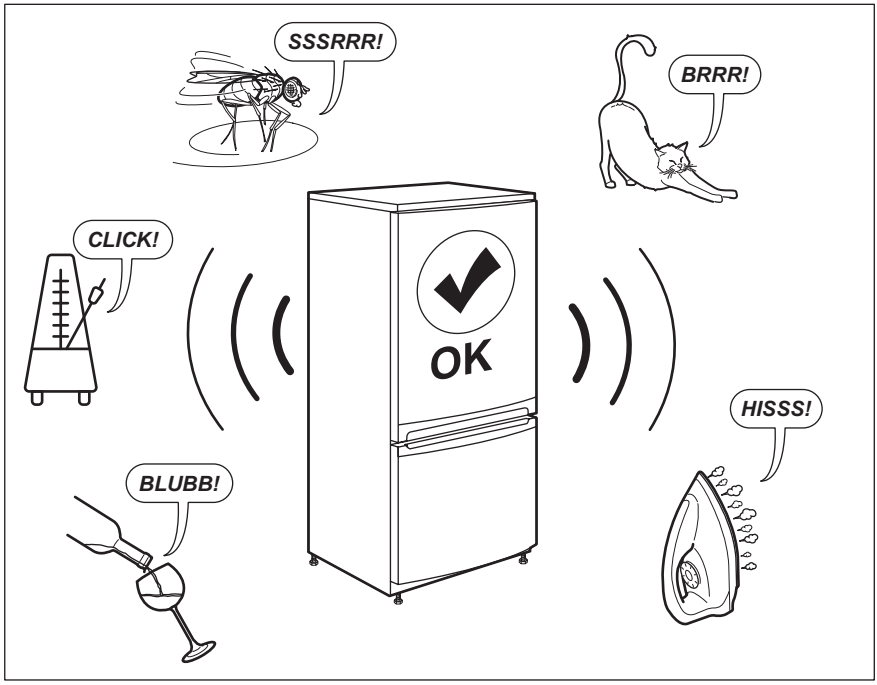

10. TECHNICAL DATA

The technical information is situated in the rating plate on the internal side of the appliance and on the energy label.

The QR code on the energy label supplied with the appliance provides a web link to the information related to the performance of the appliance. Keep the energy label for reference together with the user manual and all other documents provided with this appliance.

11. INFORMATION FOR TEST INSTITUTES

Installation and preparation of the appliance for any EcoDesign verification shall be compliant with BS EN 62552 (UK) . Ventilation requirements, recess dimensions and minimum rear clearances shall be as stated in this User Manual in "Installation". Please contact the manufacturer for any other further information, including loading plans.

12. ENVIRONMENTAL CONCERNS

Recycle materials with the symbol . Put the packaging in relevant containers to recycle it. Help protect the environment and human health by recycling waste of electrical and electronic appliances. Do not dispose of appliances marked with the symbol  with the household waste. Return the product to your local recycling facility or contact your municipal office.

aeg.com

212003067-C-052024



UK
CA