AEG

aeg.com/register

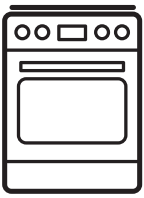

EN User Manual | **Cooker**

CCX6501ACW
CCX6501ACB
CCX6501ACM

Welcome to AEG! Thank you for choosing our appliance.

Get usage advice, brochures, troubleshooting, service and repair information:
www.aeg.com/support

Subject to change without notice.

CONTENTS

1. SAFETY INFORMATION....2
2. SAFETY INSTRUCTIONS....5
3. INSTALLATION....7
4. PRODUCT DESCRIPTION....9
5. BEFORE FIRST USE....10
6. HOB - DAILY USE....10
7. HOB - HINTS AND TIPS....10
8. HOB - CARE AND CLEANING....12
9. OVEN - DAILY USE....12
10. OVEN - HINTS AND TIPS....14
11. OVEN - CARE AND CLEANING....15
12. TROUBLESHOOTING....17
13. ENERGY EFFICIENCY....18
14. ENVIRONMENTAL CONCERNS....20

1. ⚠ SAFETY INFORMATION

Before the installation and use of the appliance, carefully read the supplied instructions. The manufacturer is not responsible for any injuries or damage that are the result of incorrect installation or usage. Always keep the instructions in a safe and accessible location for future reference.

1.1 Children and vulnerable people safety

- This appliance can be used by children aged from 8 years and above and persons with reduced physical, sensory or mental capabilities or lack of experience and knowledge if they have been given supervision or instruction concerning the use of the appliance in a safe way and understand the hazards involved. Children of less than 8 years of age and persons with very extensive and complex disabilities shall be kept away from the appliance unless continuously supervised.

- Children should be supervised to ensure that they do not play with the appliance.
- Keep all packaging away from children and dispose of it appropriately.
- WARNING: The appliance and its accessible parts become hot during use. Keep children and pets away from the appliance when in use and when cooling down.
- Children shall not carry out cleaning and user maintenance of the appliance without supervision.

1.2 General Safety

- This appliance is for cooking purposes only.
- This appliance is designed for single household domestic use in an indoor environment.
- This appliance may be used in offices, hotel guest rooms, bed & breakfast guest rooms, farm guest houses and other similar accommodation where such use does not exceed (average) domestic usage levels.
- Only a qualified person must install this appliance and replace the cable.
- This appliance must be connected to the mains with a H05VV-F type cable to withstand the temperature of the rear panel.
- This appliance is intended for use up to an altitude of 2000 m above sea level.
- This appliance is not intended to be used on ships, boats or vessels.
- Do not install the appliance behind a decorative door in order to avoid overheating.
- Do not install the appliance on a platform.
- Do not operate the appliance by means of an external timer or separate remote-control system.
- WARNING: Unattended cooking on a hob with fat or oil can be dangerous and may result in fire.
- Never use water to extinguish the cooking fire. Switch off the appliance and cover flames with e.g. a fire blanket or lid.

- CAUTION: The cooking process has to be supervised. A short term cooking process has to be supervised continuously.
- WARNING: Danger of fire: Do not store items on the cooking surfaces.
- Do not use a steam cleaner to clean the appliance.
- Do not use harsh abrasive cleaners or sharp metal scrapers to clean the glass door or the glass of hinged lids of the hob since they can scratch the surface, which may result in shattering of the glass.
- Metallic objects such as knives, forks, spoons and lids should not be placed on the hob surface since they can get hot.
- WARNING: If the surface is cracked, switch off the appliance to avoid the possibility of electric shock. In case the appliance is connected to the mains directly using junction box, remove the fuse to disconnect the appliance from power supply. In either case contact the Authorised Service Centre.
- WARNING: The appliance and its accessible parts become hot during use. Care should be taken to avoid touching heating elements.
- Always use oven gloves to remove or insert accessories or ovenware.
- Before maintenance, cut the power supply.
- WARNING: Ensure that the appliance is switched off before replacing the lamp to avoid the possibility of electric shock.
- If the mains power supply cable is damaged, it must be replaced by the manufacturer, its Authorised Service Centre or similarly qualified persons to avoid an electrical hazard.
- To remove the shelf supports first pull the front of the shelf support and then the rear end away from the side walls. Install the shelf supports in the opposite sequence.
- The means for disconnection must be incorporated in the fixed wiring in accordance with the wiring rules.

- WARNING: Use only hob guards designed by the manufacturer of the cooking appliance or indicated by the manufacturer of the appliance in the instructions for use as suitable or hob guards incorporated in the appliance. The use of inappropriate guards can cause accidents.

2. SAFETY INSTRUCTIONS

2.1 Installation

> ⚠ **WARNING!**
>
> Only a qualified person must install this appliance.

- Remove all the packaging.
- Do not install or use a damaged appliance.
- Follow the installation instructions supplied with the appliance.
- Always take care when moving the appliance as it is heavy. Always use safety gloves and enclosed footwear.
- Do not pull the appliance by the handle.
- The kitchen cabinet and the recess must have suitable dimensions.
- Keep the minimum distance from other appliances and units.
- Install the appliance in a safe and suitable place that meets installation requirements.
- Parts of the appliance carry current. Close the appliance with furniture to prevent touching the dangerous parts.
- The sides of the appliance must stay next to appliances or units with the same height.
- Do not install the appliance adjacent to a door or under a window. This prevents hot cookware to fall from the appliance when the door or the window is opened.
- Make sure to install a stabilizing means in order to prevent tipping of the appliance. Refer to Installation chapter.

2.2 Electrical Connection

> ⚠ **WARNING!**
>
> Risk of fire and electric shock.

- All electrical connections should be made by a qualified electrician.
- The appliance must be earthed.
- Make sure that the parameters on the rating plate are compatible with the electrical ratings of the mains power supply.
- Always use a correctly installed shockproof socket.
- Do not use multi-plug adapters and extension cables.
- Do not let mains cables touch or come near the appliance door or the niche below the appliance, especially when it operates or the door is hot.
- The shock protection of live and insulated parts must be fastened in such a way that it cannot be removed without tools.
- Connect the mains plug to the mains socket only at the end of the installation. Make sure that there is access to the mains plug after the installation.
- If the mains socket is loose, do not connect the mains plug.
- Do not pull the mains cable to disconnect the appliance. Always pull the mains plug.
- Use only correct isolation devices: line protecting cut-outs, fuses (screw type fuses removed from the holder), earth leakage trips and contactors.
- The electrical installation must have an isolation device which lets you disconnect the appliance from the mains at all poles. The isolation device must have a contact opening width of minimum 3 mm.
- Fully close the appliance door before you connect the mains plug to the mains socket.

2.3 Use

⚠ WARNING!

Risk of injury and burns.
Risk of electrical shock.

- Do not change the specification of this appliance.
- Make sure that the ventilation openings are not blocked.
- Do not let the appliance stay unattended during operation.
- Deactivate the appliance after each use.
- Be careful when you open the appliance door while the appliance is in operation. Hot air can release.
- Do not operate the appliance with wet hands or when it has contact with water.
- Do not use the appliance as a work surface or as a storage surface.
- Do not use aluminum foil or other materials between the cooking surface and the cookware, unless otherwise specified by the manufacturer of this appliance.
- Use only accessories recommended for this appliance by the manufacturer.
- Always use glass and jars approved for preserving purposes.

⚠ WARNING!

Risk of fire and explosion.

- Fats and oil when heated can release flammable vapours. Keep flames or heated objects away from fats and oils when you cook with them.
- The vapours that very hot oil releases can cause spontaneous combustion.
- Used oil, that can contain food remnants, can cause fire at a lower temperature than oil used for the first time.
- Do not put flammable products or items that are wet with flammable products in, near or on the appliance.
- Do not let sparks or open flames to come in contact with the appliance when you open the door.
- Open the appliance door carefully. The use of ingredients with alcohol can cause a mixture of alcohol and air.

⚠ WARNING!

Risk of damage to the appliance.

- To prevent damage or discoloration to the enamel:
  - do not put ovenware or other objects in the appliance directly on the bottom.
  - do not put aluminium foil directly on the bottom of cavity.
  - do not put water directly into the hot appliance.
  - do not keep moist dishes and food in the appliance after you finish the cooking.
  - be careful when you remove or install the accessories.
- Discoloration of the enamel or stainless steel has no effect on the performance of the appliance.
- Use a deep pan for moist cakes. Fruit juices cause stains that can be permanent.
- Do not keep hot cookware on the control panel.
- Do not let cookware boil dry.
- Be careful not to let objects or cookware fall on the appliance. The surface can be damaged.
- Do not activate the cooking zones with empty cookware or without cookware.
- Cookware made of cast iron, aluminium or with a damaged bottom can cause scratches. Always lift these objects up when you have to move them on the cooking surface.

2.4 Care and Cleaning

⚠ WARNING!

Risk of injury, fire, or damage to the appliance.

- Before maintenance, deactivate the appliance.
  Disconnect the mains plug from the mains socket.
- Make sure the appliance is cold. There is the risk that the glass panels can break.
- Replace immediately the door glass panels when they are damaged. Contact the Authorised Service Centre.

- Be careful when you remove the door from the appliance. The door is heavy!
- Fat and food remaining in the appliance can cause fire.
- Clean regularly the appliance to prevent the deterioration of the surface material.
- Make sure the cavity and the door are wiped dry after each use. Steam produced during the operation of the appliance condensates on cavity walls and can cause corrosion. To decrease the condensation operate the appliance for 10 minutes before cooking.
- Clean the appliance with a moist soft cloth. Use only neutral detergents. Do not use abrasive products, abrasive cleaning pads, solvents or metal objects.
- If you use an oven spray, follow the safety instructions on the packaging.
- Do not clean the catalytic enamel (if applicable) with any kind of detergent.

2.5 Internal lighting

⚠ WARNING!

Risk of electric shock.

- Concerning the lamp(s) inside this product and spare part lamps sold separately: These lamps are intended to withstand extreme physical conditions in household appliances, such as temperature, vibration, humidity, or are intended to signal information about the operational status of the appliance. They are not intended to be used in other applications and are not suitable for household room illumination.
- This product contains a light source of energy efficiency class G.
- Use only lamps with the same specifications.

2.6 Service

- To repair the appliance contact the Authorised Service Centre.
- Use original spare parts only.

2.7 Disposal

⚠ WARNING!

Risk of injury or suffocation.

- Contact your municipal authority for information on how to dispose of the appliance.
- Disconnect the appliance from the mains supply.
- Cut off the mains electrical cable close to the appliance and dispose of it.

3. INSTALLATION

⚠ WARNING!

Refer to Safety chapters.

3.1 Technical data

Dimensions	
Height	894 - 912 mm
Width	600 mm
Depth	600 mm

3.2 Location of the appliance

You can install your freestanding appliance with cabinets on one or two sides and in the corner.

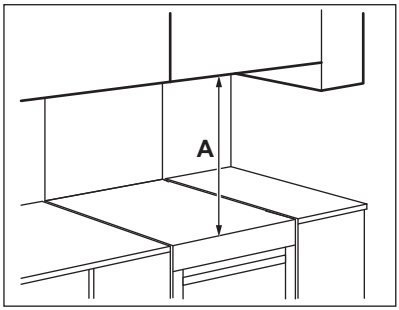

Minimum distances

Dimension	mm
A	650

3.3 Levelling of the appliance

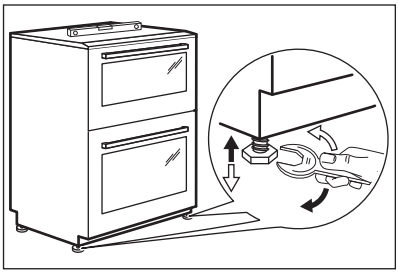

Use small feet on the bottom of appliance to set the appliance top surface level with other surfaces.

3.4 Electrical installation

⚠ WARNING!

The manufacturer is not responsible if you do not follow the safety precautions from Safety chapters.

This appliance is supplied without a main plug or a main cable.

Applicable types of cables for different phases:

Phase	Min. size cable
1	3x4.0 mm²
3 with neutral	5x2.5 mm²

⚠ WARNING!

The power cable must not touch the part of the appliance shaded in the illustration.

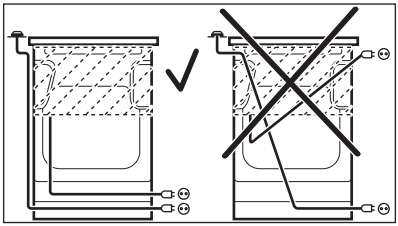

3.5 Covering terminal board

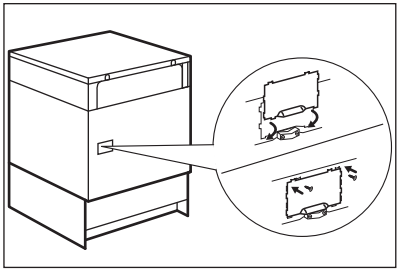

- The recommended cross-section area is six square millimetres (6 mm²).
- When you refit the mains terminal cover, make sure that the lower tabs are located inside the bottom edge of the aperture, before you fix the two screws into the top edge of the mains terminal cover.
- Make sure that the cover is securely fastened.

ⓘ

To open the cover of terminal board obey the procedure in opposite sequence.

4. PRODUCT DESCRIPTION

4.1 General overview

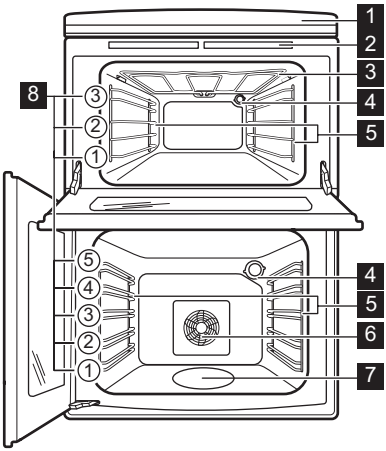

1 Control panel and hob
2 Air vents for the cooling fan
3 Heating element
4 Lamp
5 Shelf support, removable
6 Fan
7 Cavity embossment - Aqua cleaning container
8 Shelf positions

4.2 Hob overview

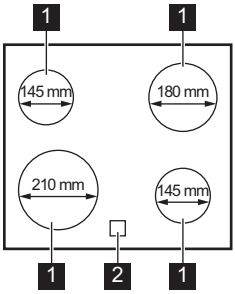

1 Cooking zone
2 Residual Heat Indicator

4.3 Cooker control panel

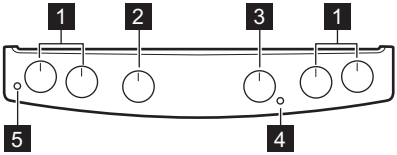

1 Knobs for the hob
2 Knob for the top oven functions
3 Knob for the main oven functions
4 Temperature indicator / symbol for the main oven
5 Temperature indicator / symbol for the top oven

4.4 Accessories

- **Wire shelf**
  For cookware, cake tins, roasts.
- **Grill- / Roasting pan**
  To bake and roast or as pan to collect fat.
- **Trivet**
  For roasting and grilling.

ⓘ

Use the trivet only with the Grill- / roasting pan.

5. BEFORE FIRST USE

⚠ WARNING!

Refer to Safety chapters.

5.1 Initial preheating and cleaning

Preheat both empty appliances before the first use and contact with food. Heat up one appliance at a time. The appliance can emit unpleasant smell and smoke. Ventilate the room during preheating. Set the functions listed below, if applicable.

1. Remove all accessories and removable shelf supports from the appliance.
2. Set the function for main oven or **100 - 250** for top oven. Set the temperature to 250°C. Let the appliance operate for 1 h.
3. Set the function . Let the appliance operate for 15 min.
4. Turn off the appliance and wait until it is cold.
5. Clean the appliance and the accessories only with a microfibre cloth, warm water and a mild detergent.
6. Put the accessories and removable shelf supports back to their initial position.

6. HOB - DAILY USE

⚠ WARNING!

Refer to Safety chapters.

6.1 Heat setting

Symbols	Function
0	Off position
1 - 9	Heat settings

Use the residual heat to decrease energy consumption. Deactivate the cooking zone approximately 5 - 10 minutes before the cooking process is completed.

Turn the knob for the selected cooking zone to a necessary heat setting.
To complete the cooking process, turn the knob to the off position.

6.2 Residual heat indicator

⚠ WARNING!

As long as the indicator is visible, there is a risk of burns from residual heat.

The indicator appears when a cooking zone is hot, but it does not function if mains power is disconnected.

The indicator may also appear:

- for the neighbouring cooking zones even if you are not using them,
- when hot cookware is placed on cold cooking zone,
- when the hob is deactivated but the cooking zone is still hot.

The indicator disappears when the cooking zone has cooled down.

7. HOB - HINTS AND TIPS

⚠ WARNING!

Refer to Safety chapters.

7.1 Cookware

The cooking results depend on the cookware material

- **recommended:** aluminium, copper

- **not recommended:**stainless steel, cast iron, glass

The bottom of the cookware must be as thick and flat as possible.
Ensure pan bases are clean and dry before placing on the hob surface.

Do not use cookware on the ceramic hob with bases with pronounced edges or ridges, e.g. cast iron pans. These could scratch or scour the hob surface permanently.

Cookware made of enamelled steel and with aluminium or copper bottoms can cause a colour change on the glass-ceramic surface.

To save energy and ensure that the hob operates properly the cookware bottom must have a suitable minimum diameter.

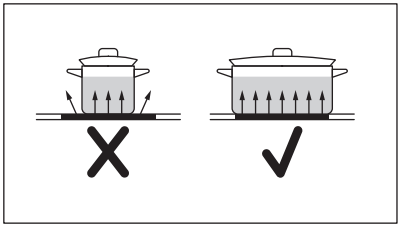

7.2 Minimum cookware diameter

Cooking zone	Cookware diameter (mm)	Power (W)
Left rear	125 - 145	1200
Right rear	150 - 180	1800
Right front	125 - 145	1200
Left front	180 - 210	2300

7.3 Simplified cooking guide

The data in the table is for guidance only.

Heat setting	Use to:	Time (min)	Hints
1	Keep cooked food warm.	as necessary	Put a lid on the cookware.
1 - 2	Hollandaise sauce; melt: butter, chocolate, gelatine.	5 - 25	Mix from time to time.
2	Solidify: fluffy omelettes, baked eggs.	10 - 40	Cook with a lid on.
2 - 3	Simmer rice and milk-based dishes, heat up ready-cooked meals.	25 - 50	Add at least twice as much liquid as rice, mix milk dishes halfway through the procedure.
3 - 4	Stew vegetables, fish, meat.	20 - 45	Add a few tablespoons of water. Check the water amount during the process.

Heat setting	Use to:	Time (min)	Hints
4 - 5	Steam potatoes and other vegetables.	20 - 60	Cover the bottom of the pot with 1-2 cm of water. Check the water level during the process. Keep the lid on the pot.
4 - 5	Cook larger quantities of food, stews and soups.	60 - 150	Up to 3 l of liquid plus ingredients.
6 - 7	Gentle fry: escalope, veal cordon bleu, cutlets, rissoles, sausages, liver, roux, eggs, pancakes, doughnuts.	as necessary	Turn over when needed.
7 - 8	Heavy fry, hash browns, loin steaks, steaks.	5 - 15	Turn over when needed.
9	Boil water, cook pasta, sear meat (goulash, pot roast), deep-fry chips.		

8. HOB - CARE AND CLEANING

⚠ WARNING!
Refer to Safety chapters.

8.1 General information

- Clean the hob after each use.
- Always use cookware with a clean base.
- Scratches or dark stains on the surface have no effect on how the hob operates.
- Use a special cleaning agent suitable for the surface of the hob.
- Always use a scraper recommended for hobs with a glass surface. Use the scraper only as an additional tool for cleaning the glass after the standard cleaning procedure.

⚠ WARNING!
Do not use knives or any other sharp, metal tools to clean the glass surface.

8.2 Cleaning the hob

- **Remove immediately:** melted plastic, plastic foil, salt, sugar and food with sugar, otherwise, the dirt can cause damage to the hob. Take care to avoid burns. Use a special hob scraper on the glass surface at an acute angle and move the blade on the surface.
- **Remove when the hob is sufficiently cool:** limescale rings, water rings, fat stains, shiny metallic discoloration. Clean the hob with a moist cloth and a non-abrasive detergent. After cleaning, wipe the hob dry with a soft cloth.
- **Remove shiny metallic discoloration:** use a solution of water with vinegar and clean the glass surface with a cloth.

9. OVEN - DAILY USE

⚠ WARNING!
Refer to Safety chapters.

9.1 Top oven functions

0	**Off position** The oven is off.
	Oven lamp To turn on the lamp.

10 - 25 0	**Conventional cooking** To bake and roast food on one shelf position.
	Grilling To grill flat food in medium quantities in the middle of the shelf. To make toasts.
	Fast grilling To grill flat food and to toast bread.

9.2 Main oven functions

⚠ WARNING!

Do not pour any liquids into the cavity embossment before and during the cooking process. There is a risk of damage.

0	**Off position** The oven is off.
	Oven lamp To turn on the lamp.
	Defrost To defrost food. The defrosting time depends on the amount and size of the frozen food.
100 - 250	**True fan cooking / Aqua clean** To bake on maximum two shelf positions simultaneously and to dry food. Refer to "Care and cleaning" chapter for more information about: Aqua clean

9.3 Activating and deactivating the top / main oven

ⓘ

It depends on the model if your appliance has knob symbols, indicators or lamps:

- The indicator comes on when the oven heats up.
- The lamp comes on when the oven operates.
- The symbol shows whether the knob controls one of the cooking zones, the oven functions or the temperature.

1. Turn the knob for the top / main oven functions to select an oven function.
2. To deactivate the oven turn the knob for the top / main oven functions to the off position.

9.4 Cooling fan

When the oven operates, the cooling fan turns on automatically to keep the surfaces of the oven cool. If you turn off the oven, the cooling fan continues to operate until the oven cools down.

9.5 Inserting the oven accessories

Deep pan:

Push the deep pan between the guide bars of the shelf support.

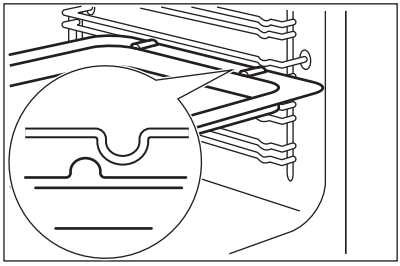

Wire shelf:

Push the shelf between the guide bars of the shelf support.

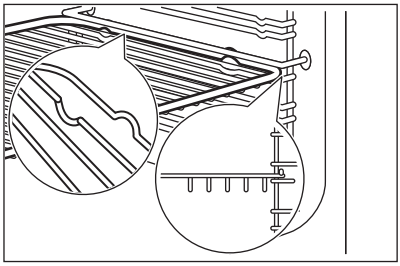

ⓘ

- All accessories have small indentations at the top of the right and left side to increase safety. The indentations are also anti-tip devices.
- The high rim around the shelf is a device which prevents cookware from slipping.

9.6 Trivet and Grill- / Roasting pan

You can use the trivet to roast larger pieces of meat or poultry on one shelf position.

1. Put the trivet into the deep pan. Make sure the supports of the wire shelf point up.

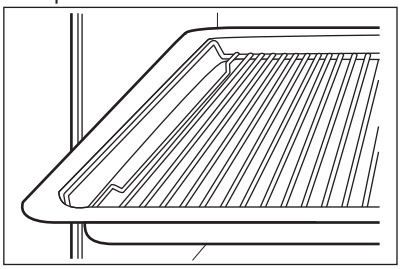

2. Put the deep pan into the oven on the recommended shelf position.

You can use the trivet to grill and toast thin pieces of food in large quantities.

1. Put the trivet into the deep pan. Make sure the supports of the wire shelf point down.

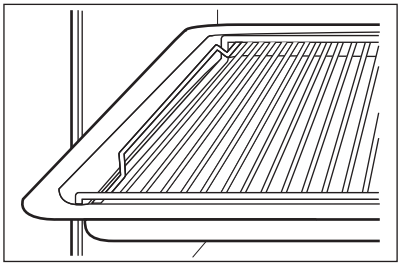

2. Put the deep pan into the oven on the recommended shelf position.

10. OVEN - HINTS AND TIPS

⚠ WARNING!

Refer to Safety chapters.

ⓘ

The temperature and baking times in the tables are guidelines only. They depend on the recipes and the quality and quantity of the ingredients used.

10.1 Information for test institutes

Main oven

Food	Function	Temperature (°C)	Time (min)	Accessories	Shelf position
Small cakes (20 small cakes per tray)	Conventional cooking	170	25 - 35	Tray	3
Small cakes (20 small cakes per tray)	True fan cooking	150	25 - 35	Tray	3
Small cakes (20 small cakes per tray)	True fan cooking	150	25 - 35	Tray	1 / 4
Apple pie, 2 tins (ø 20 cm) on the grid, diagonally shifted	Conventional cooking	200	80 - 100	Grid	1
Apple pie, 2 tins (ø 20 cm) on the grid, diagonally shifted	True fan cooking	170	80 - 100	Grid	2

Food	Function	Temperature (°C)	Time (min)	Accessories	Shelf position
Apple pie, 2 tins (ø 20 cm) on the grid, diagonally shifted 1)	SteamBake	160	70 - 80	Tray	2
Fatless sponge cake, 1 tin (ø 26 cm) on the grid	Conventional cooking	200	25 - 35	Grid	2
Fatless sponge cake, 1 tin (ø 26 cm) on the grid	True fan cooking	170	25 - 35	Grid	2
Fatless sponge cake, 1 tin (ø 26 cm) on the grid	True fan cooking	170	30 - 40	Grid	1 / 4
Shortbread/Pastry strip	Conventional cooking	160	20 - 30	Tray	3
Shortbread/Pastry strip	True fan cooking	140	20 - 30	Tray	3
Shortbread/Pastry strip	True fan cooking	140	15 - 25	Tray	1 / 4

1) Add 150 ml of water to the cavity embossment.

Top oven

Food	Function	Temperature (°C)	Time (min)	Accessories	Shelf position
Small cakes (20 small cakes per tray)	Conventional cooking	150	25 - 35	Tray	2
Apple pie, 2 tins (ø 20 cm) on the grid, diagonally shifted	Conventional cooking	170	60 - 80	Grid	1
Fatless sponge cake, 1 tin (ø 26 cm) on the grid	Conventional cooking	170	20 - 30	Grid	2
Shortbread/Pastry strip	Conventional cooking	140	15 - 25	Tray	2
Toast	Grilling	-	3 - 8	Grid	2
Beef burger	Grilling	-	15 - 25 (first side) 10 - 20 (second side)	Grid / Roasting pan	2

11. OVEN - CARE AND CLEANING

⚠ WARNING!

Refer to Safety chapters.

11.1 Notes on cleaning

Cleaning Agents

- Clean the front of the appliance only with a microfibre cloth with warm water and a mild detergent. Clean and check the door gasket around the frame of the cavity.
- Use a cleaning solution to clean metal surfaces.
- Clean stains with a mild detergent.

Everyday Use

- Clean the cavity after each use. Fat accumulation or other residue may cause fire.

- Do not store food in the appliance for longer than 20 minutes. Dry the cavity only with a microfibre cloth after each use.

Accessories

- Clean all accessories after each use and let them dry. Use only a microfibre cloth with warm water and a mild detergent. Do not clean the accessories in a dishwasher .
- Do not clean the non-stick accessories using abrasive cleaner or sharp-edged objects.

11.2 Removing the shelf supports

To clean the oven, remove the shelf supports.

1. Pull the front of the shelf support away from the side wall.

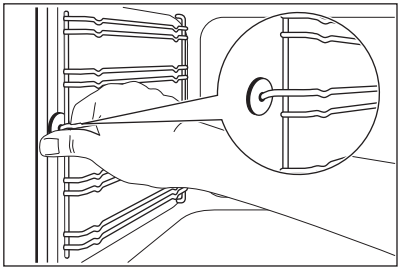

2. Pull the rear end of the shelf support away from the side wall and remove it.

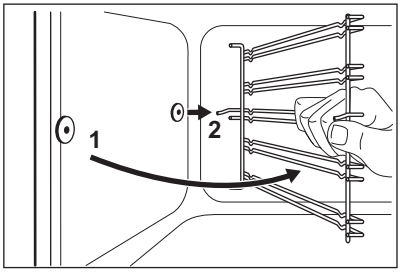

Install the shelf supports in the opposite sequence.

⚠ CAUTION!

Make sure that the longer fixing wire is in the front. The ends of the two wires must point to the rear. Incorrect installation can cause damage to the enamel.

11.3 How to use: Aqua clean

This cleaning procedure uses humidity to remove remaining fat and food particles from the appliance.

1. Pour water into the cavity embossment: 250ml.
2. Set the temperature to 100 °C.
3. Let the appliance work for 30 min.
4. Turn off the appliance.
5. Wait until the appliance is cold. Dry the cavity with a soft cloth.

11.4 Removing and cleaning the door glasses - top oven

ⓘ

The door glass in your product can be different in type and shape from the examples you see in the image. The number of glasses can also be different.

1. Open the door.
2. Hold the door trim on the top edge of the door at the two sides and push inwards to release the clip seal.

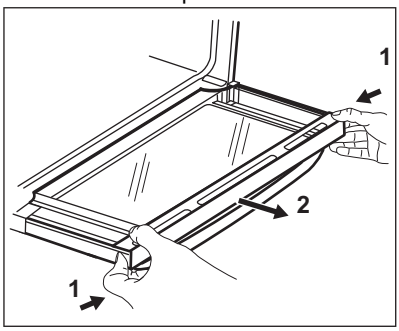

3. Pull the door trim to the front to remove it.
4. Remove the glass panels.

To install the panels, do the same steps in reverse.

11.5 Removing and cleaning the door glasses - main oven

ⓘ

The door glass in your product can be different in type and shape from the example you see in the image. The number of glasses can also be different.

1. Push the door trim at one side to remove it.

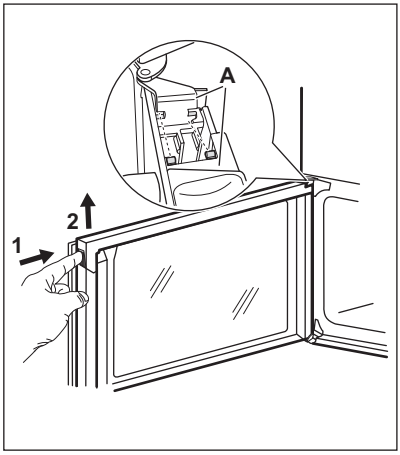

2. Pull up the trim.
3. Remove the glass panels.

ⓘ

To replace the glass panels, do the same steps in reverse. Before you lower the trim, attach the A trim part to the door. Refer to the image.

11.6 Replacing the lamp

⚠ **WARNING!**

Risk of electric shock.
The lamp can be hot.

1. Turn off the oven. Wait until the oven is cold.
2. Disconnect the oven from the mains.
3. Put a cloth on the bottom of the cavity.

The back lamp

ⓘ

The lamp glass cover is at the back of the cavity.

1. Turn the lamp glass cover counterclockwise to remove it.
2. Clean the glass cover.
3. Replace the oven lamp with a suitable 300 °C heat-resistant oven lamp. Use the same oven lamp type.
4. Install the glass cover.

12. TROUBLESHOOTING

⚠ **WARNING!**

Refer to Safety chapters.

12.1 What to do if...

Problem	Possible cause	Remedy
You cannot activate the appliance.	The appliance is not connected to an electrical supply or it is connected incorrectly.	Check if the appliance is correctly connected to the electrical supply.
You cannot activate the appliance.	The fuse is blown.	Make sure that the fuse is the cause of the malfunction. If the fuse is blown again and again, contact a qualified electrician.
Residual heat indicator does not come on.	The zone is not hot because it operated only for a short time.	If the zone operated sufficiently long to be hot, speak to an Authorised Service Centre.
The oven does not heat up.	The oven is deactivated.	Activate the oven.

Problem	Possible cause	Remedy
The oven does not heat up.	The necessary settings are not set.	Make sure that the settings are correct.
The lamp does not operate.	The lamp is defective.	Replace the lamp.
Steam and condensation settle on the food and in the cavity of the oven.	You left the dish in the oven for too long.	Do not leave the dishes in the oven for longer than 15 - 20 minutes after the cooking process ends.

12.2 Service data

If you cannot find a solution to the problem yourself, contact your dealer or an Authorised Service Centre.

The necessary data for the service centre is on the rating plate. The rating plate is on the front frame of the appliance cavity. Do not remove the rating plate from the appliance cavity.

We recommend that you write the data here:	
Model (MOD.)	.....
Product number (PNC)	.....
Serial number (S.N.)	.....

13. ENERGY EFFICIENCY

13.1 Product Information according to EU and UK Ecodesign Regulations for Hob

Model identification	CCX6501ACW CCX6501ACB CCX6501ACM	
Type of hob	Hob inside Freestanding Cooker	
Number of cooking zones	4	
Heating technology	Radiant Heater	
Diameter of circular cooking zones (Ø)	Left front Left rear Right front Right rear	21.0 cm 14.5 cm 14.5 cm 18.0 cm
Energy consumption per cooking zone (EC electric cooking)	Left front Left rear Right front Right rear	188.1 Wh/kg 181.8 Wh/kg 181.8 Wh/kg 192.3 Wh/kg
Energy consumption of the hob (EC electric hob)		186.0 Wh/kg

IEC/EN 60350-2 - Household electric cooking appliances - Part 2: Hobs - Methods for measuring performance.

13.2 Hob - Energy saving

You can save energy during everyday cooking if you follow the hints below.

- When you heat up water, use only the amount you need.
- If it is possible, always put the lids on the cookware.

- Before you activate the cooking zone put the cookware on it.
- The cookware bottom should have the same diameter as the cooking zone.
- Put the smaller cookware on the smaller cooking zones.
- Put the cookware directly in the centre of the cooking zone.
- Use the residual heat to keep the food warm or to melt it.

13.3 Product Information Sheet and Product Information according to EU and UK Energy Labelling and Ecodesign Regulations for Oven

Supplier's name	AEG	
Model identification	CCX6501ACW 948904371 CCX6501ACB 948904372 CCX6501ACM 948904373	
Energy Efficiency Index	Top oven: 105.6 Main oven: 95.4	
Energy efficiency class	Top oven: A Main oven: A	
Energy consumption with a standard load, conventional mode	Top oven: 0.75 kWh/cycle Main oven: not applicable	
Energy consumption with a standard load, fan-forced mode	Top oven: not applicable Main oven: 0.83 kWh/cycle	
Number of cavities	2	
Heat source	Electricity	
Volume	Top oven: 39 l Main oven: 77 l	
Type of oven	Oven inside Freestanding Cooker	
Mass	CCX6501ACW	58.0 kg
	CCX6501ACB	57.75 kg
	CCX6501ACM	56.6 kg

IEC/EN 60350-1 - Household electric cooking appliances - Part 1: Ranges, ovens, steam ovens and grills - Methods for measuring performance.

13.4 Oven - Energy saving

Following tips below will help you save energy when using your appliance.

Make sure that the appliance door is closed when the appliance operates. Do not open the appliance door too often during cooking. Keep the door gasket clean and make sure it is well fixed in its position.

Use metal cookware and dark, non-reflective tins and containers to improve energy saving.

Do not preheat the appliance before cooking unless specifically recommended.

Keep breaks between baking as short as possible when you prepare a few dishes at one time.

Cooking with fan
When possible, use the cooking functions with fan to save energy.

Residual heat
When the cooking duration is longer than 30 min, reduce the appliance temperature to minimum 3 - 10 min before the end of

cooking. The residual heat inside the appliance will continue to cook.

Use the residual heat to keep the food warm or warm up other dishes.

Keep food warm
Choose the lowest possible temperature setting to use residual heat and keep the food warm.

13.5 Product Information for power consumption and maximum time to reach applicable low power mode

Power consumption in off mode	0.3 W
Maximum time needed for the equipment to automatically reach the applicable low power mode	20 min

14. ENVIRONMENTAL CONCERNS

Recycle materials with the symbol ♺. Put the packaging in relevant containers to recycle it. Help protect the environment and human health by recycling waste of electrical and electronic appliances. Do not dispose of appliances marked with the symbol with the household waste. Return the product to your local recycling facility or contact your municipal office.

Electrolux Appliances AB - Contact Address: Al. Powstancow Slaskich 26, 30-570 Krakow, Poland

aeg.com

867364071-A-272024

