Hisense

life reimagined

USER'S OPERATION MANUAL

Before operating this unit, please read this manual thoroughly, and retain for future reference.

This is a short version of the User's Manual. For more information, please scan the QR code above to view the full version of the manual.

NOTE:

1. Please adjust your mobile or tablet device to portrait mode during the browsing of electronic manuals to achieve the best viewing experience.
2. To ensure a smooth experience with the download feature of the electronic manuals, we recommend using Google Chrome, Microsoft Edge, or the Safari browser.

EN

English

SAFETY AND WARNING INFORMATION

Before using the appliance for the first time

Before connecting the appliance to the power mains, please read carefully the instructions for use which describe the appliance and its correct and safe use. The instructions apply to several appliance types/models; thus, settings or equipment may be described herein which is not available in your appliance. We recommend saving this instruction manual for future reference and attach it to the appliance if it is sold in the future.

Check for any damage or irregularities on your appliance. If you find your appliance is damaged, notify the retailer from which you have purchased the appliance.

Before connecting the appliance to the power mains, let the appliance rest in a vertical position for a minimum of 2 hours. This will reduce the possibility of operation faults due to the effect of transport on the cooling system.

Important safety instructions



WARNING
Risk of fire/flammable materials

The appliance must be connected to the power mains and grounded in compliance with the effective standards and regulations.

WARNING! Do not locate multiple portable socket-outlets or portable power supplies at the rear of the appliance.

Before cleaning the appliance, unplug it from the power mains (unplug the power cord from the wall outlet).

⚠ **WARNING!** If the supply cord is damaged, it must be replaced by the manufacturer, its service agent or similarly qualified persons in order to avoid a hazard.

⚠ **WARNING!** When positioning the appliance, ensure the supply cord is not trapped or damaged.

⚠ **WARNING!** The LED light must not be replaced by the user! If the LED light is damaged, contact the customer helpline for assistance.

SAFETY AND WARNING INFORMATION

⚠ **WARNING!** Do not use electrical appliances inside the food storage compartments of the appliance, unless they are of the type recommended by the manufacturer.

⚠ **WARNING!** Do not use mechanical devices or other means to accelerate the defrosting process, other than those recommended by the manufacturer.

⚠ **WARNING!** To avoid any hazard resulting from poor stability of the appliance, make sure it is installed as instructed.

Freeze burn hazard

To avoid freeze burn, never put frozen food in your mouth and do not touch frozen food.

Safety of children and vulnerable persons

The appliance is not intended for use by persons (including children) with reduced physical, sensory or mental capabilities, or lack of experience and knowledge, unless they have been given supervision or instruction concerning use of the appliance by a person responsible for their safety.

Children should be supervised to ensure that they do not play with the appliance.

Cleaning and user maintenance shall not be made by children without supervision.

Remove the packaging intended to protect the appliance or particular parts during transport and keep it outside the reach of children. It presents danger of injury or suffocation.

When removing a used appliance, disconnect the power cord, remove the door, and leave the shelves in the appliance. This will prevent children from locking themselves in the appliance.

For European markets only

This appliance can be used by children aged from 8 years and above and persons with reduced physical, sensory or mental capabilities or lack of experience and knowledge if they have been given supervision or instruction concerning use of the appliance in a safe way and understand the hazards involved.

Children shall not play with the appliance.

Cleaning and user maintenance shall not be made by children without supervision.

Children aged from 3 to 8 years are allowed to load and unload refrigerating appliances.

Warning regarding the refrigerant

The appliance contains a small amount of an environmentally friendly yet flammable gas R600a. Make sure that no parts of the cooling system are damaged. A gas leak is not hazardous to the environment, but it could cause eye injury or fire.

In case of a gas leak, ventilate the room thoroughly, disconnect the appliance from the power mains, and call a service technician.

Important information on the use of appliance

WARNING! This appliance is intended to be used in household and similar applications such as:

- staff kitchen areas in shops, offices and other working environments;
- farm houses and by clients in hotels, motels and other residential type environments;
- bed and breakfast type environments;
- catering and similar non-retail applications.

⚠ **WARNING!** Keep ventilation openings, in the appliance enclosure or in the built-in structure, clear of obstruction.

The appliance may not be used outdoors and it may not be exposed to rain.

Do not store explosive substances such as aerosol cans with a flammable propellant in this appliance.

If the appliance will be out of use for an extended period of time, switch it off using the relevant button, and unplug it from the power mains. Empty the appliance, defrost it, clean it, and leave the door ajar.

In case of an error or power supply failure, do not open the freezer compartment unless the freezer has not operated for over 16 hours. After this period, use the frozen food or provide sufficient cooling (e.g. a replacement appliance).

Technical information on the appliance

Rating plate can be found in the appliance interior. It indicates data on voltage, gross and net volume, type and amount of refrigerant, and information on the climate classes.

SAFETY AND WARNING INFORMATION

If the language on the rating plate is not the language of your choice or the language of your country, replace it with the one supplied.

⚠ **WARNING!** Do not damage the refrigerant circuit.

INSTALLING YOUR NEW APPLIANCE

- Stand your appliance in a dry and well ventilated place. Keep the appliance out of direct sunlight, rain or frost.
- The diagram shows the temperature range of each climate class. The climate class of this appliance is specified on the rating plate. Use beyond this range may result in poor performance.

Climate class	Ambient temperature
SN	+10°C to +32°C
N	+16°C to +32°C
ST	+16°C to +38°C
T	+16°C to +43°C

- Sufficient clear space should be available around the appliance to facilitate ventilation and heat dissipation.
- Suggested space is indicated in the figure.

In the non-built-in status

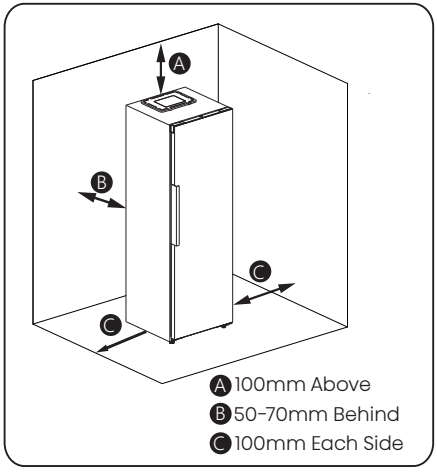

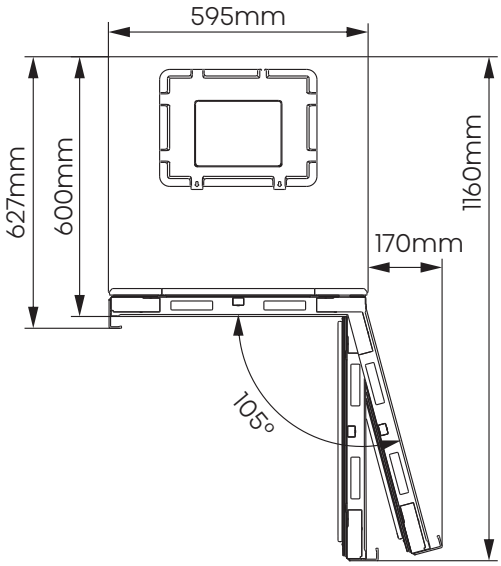

INSTALLING YOUR NEW APPLIANCE

In the built-in status

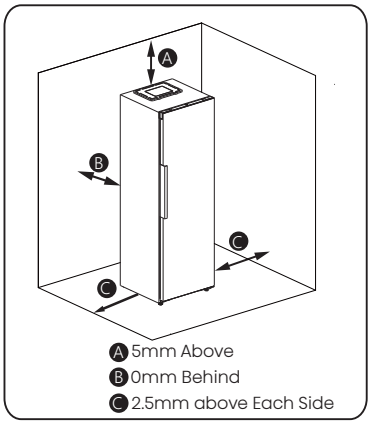

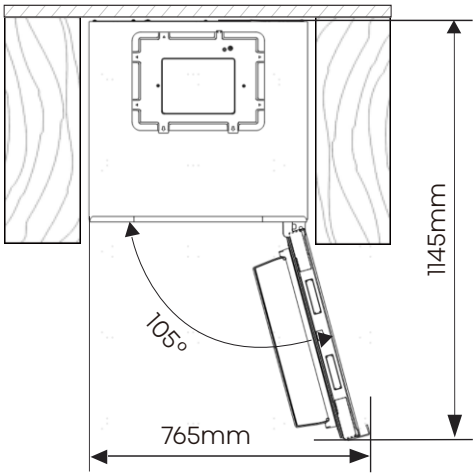

The total space required for the refrigerator to fully open the door in the built-in status

Leveling of appliance (if needed):

- The figure is for reference only.
- The appliance is fitted with adjustable feet that can be used to level the appliance.
- To allow the doors to self-close, tilt the top backwards by turning the adjustable feet.

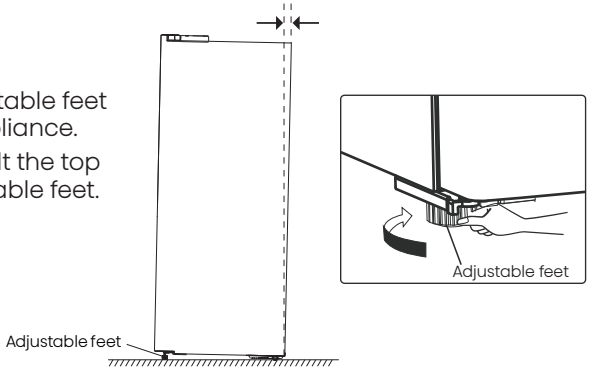

⚠ WARNING

- For proper installation, this refrigerator must be placed on a level surface of hard material that is the same height as the rest of the flooring. This surface should be strong enough to support a fully loaded refrigerator.
- The rollers should be only used for forward or backward movement. Moving the refrigerator sideways may damage your floor and the rollers.

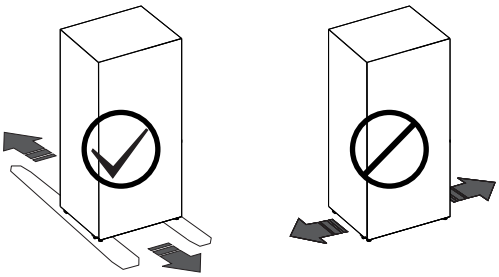

DESCRIPTION OF THE APPLIANCE

- Appliance interior equipment may change according to the appliance model.
- The diagram may slightly differ from the appliance you purchased, please get more information in the E-manual.

1. Electronic control
2. Storage shelves
3. Drawers

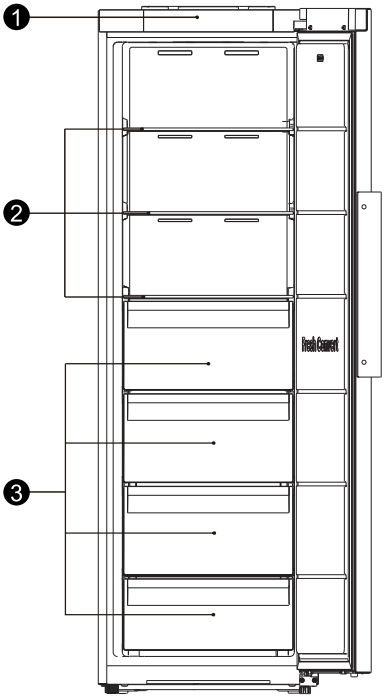

CONTROL PANEL

NOTE: The control panel may differ by model, so choose according to your appliance. Please refer to the E-manual for more information.

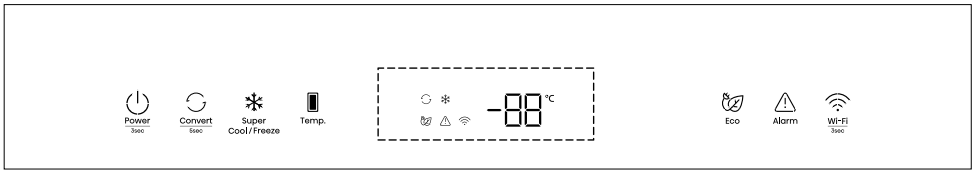

TYPE 1: Electronic Control(located at the top of appliance)

CONTROL PANEL

Power

Press and hold “Power” button for 3 seconds to turn the standby function on or off. When the standby function is on, the display panel will show “--”.

Eco

Press the “Eco” button to turn on the energy saving function, the “ ” icon will be illuminated. The temperature of the refrigerator is -17°C under freeze mode, or 6°C under fridge mode. Press the “Temp” button or “Eco” button to turn off the energy saving function and the refrigerator temperature setting will revert back to the previous setting.

Super Cool/Freeze

This button serves two purposes:

1. Super Freeze

Press the “Super Cool/ Freeze” button to activate Super Freeze “ ”under Freezer mode, which auto-turns off after 52 hours or when “Super Cool/Freeze” or “Temp” button is pressed.

2. Super Cool

Press the “Super Cool/ Freeze” button to activate Super Cool “ ” under Fridge mode, which auto-turns off after 6 hours or when “Super Cool/Freeze” or “Temp” button is pressed.

Refrigerator Compartment Temperature

Press the “Temp” button repeatedly to cycle from -14°C to -24°C when the refrigerator is in the freeze state. When the refrigerator is in the fridge state, the temperature will cycle from 8°C to 2°C. If there is no operation, the setting temperature will take affect after 10 seconds.

Alarm

High temperature alarm:

If the temperature inside the appliance is too high, an alarm will sound to alert you and the “ ” icon will illuminated.

Switching off the alarm:

If you want to switch off the acoustic alarm, briefly press the “Alarm” button. The “ ” icon will remain illuminated until the actual temperature in the appliance drops below the alarm level.

Convert

Press and hold “Convert” button for 5 seconds to turn the Convert function on or off.

Caution!

Before changing the compartment setting, make sure that the stored food is suitable for new setting mode. If not, please empty it first. When the freezer mode is changed to fridge mode, please open the door about 30 minutes before putting in the food that needs to be refrigerated.

When the fridge mode is changed to freezer mode, please close the door and run about 200 minutes before putting in the food that needs to be frozen.

When this function is activated, the “ ” indicator will light up, the temperature in the compartment will be set to 4°C.

Demo Mode

This mode, indicated by “OF”, stops making cool air but appears operational. Cancel it by pressing “Power” and “Wi-Fi” buttons for 3 seconds and the buzzer beeps 3 times.

TYPE 2: Electronic Control (located on the door)



Power

Press and hold “Power” button for 3 seconds to turn the standby function on or off. When the standby function is on, the display panel will show “--”.

Eco

Press the “Mode” button to turn on the energy saving function, the “ ” icon will be illuminated. The temperature of the refrigerator is -17°C under freeze mode, or 6°C under fridge mode. Press the “Temp” button or “Eco” button to turn off the energy saving function and the refrigerator temperature setting will revert back to the previous setting.

Super Cool/Freeze

1.Super Freeze

Press the “Mode” button to activate Super Freeze “ ” under Freezer mode, which auto-turns off after 52 hours or “Freeze” button is pressed.

2.Super Cool

Press the “Mode” button to activate Super Cool “ ” under Fridge mode, which auto-turns off after 6 hours or “Freeze” button is pressed.

Refrigerator Compartment Temperature

Press the “Freezer” button repeatedly to cycle from -14°C to -24°C when the refrigerator is in the freeze state. When the refrigerator is in the fridge state, the temperature will cycle from 8°C to 2°C. If there is no operation, the setting temperature will take affect after 10 seconds.

Alarm

High temperature alarm:

If the temperature inside the appliance is too high, an alarm will sound to alert you and the “ ” icon will illuminated.

Switching off the alarm:

If you want to switch off the acoustic alarm, briefly press the “Alarm” button.

The “ ” icon will remain illuminated until the actual temperature in the appliance drops below the alarm level.

Convert

Press and hold “Convert” button for 5 seconds to turn the Convert function on or off.

Caution!

Before changing the compartment setting, make sure that the stored food is suitable for new setting mode. If not, please empty it first. When the freezer mode is changed to fridge mode, please open the door about 30 minutes before putting in the food that needs to be refrigerated.

When the fridge mode is changed to freezer mode, please close the door and run about 200 minutes before putting in the food that needs to be frozen.

When this function is activated, the “ ” indicator will light up. the temperature in the compartment will be set to 4°C.

CONTROL PANEL

Wi-Fi

ConnectLife app is a smart home app that allows you to communicate with your smart appliances using a smartphone or tablet. The ConnectLife APP is available to download free of charge from the Apple App Store or from the Google Play Store. Alternatively, you can scan the following QR code with your smart phone or tablet to find the ConnectLife app:

NOTE:

- The distance between your appliance and the Wi-Fi router can impact the performance. If they are too far apart pairing your appliance might fail or take longer.
- The appliance supports 2.4 GHz Wi-Fi networks only. The Wi-Fi network SSID must be visible.

Connecting your refrigerator

After installing the Connectlife app, sign in or create an account and follow these steps:

1. Ensure the appliance is powered on and the display panel is active. You'll know it's ready when the panel lights up.
2. Press and hold the "Wi-Fi"(**TYPE 1**) or "Mode"(**TYPE 2**) button for 3 seconds until you hear a beep and see the " " light flashing after it constantly on for a few seconds.

TYPE 1:

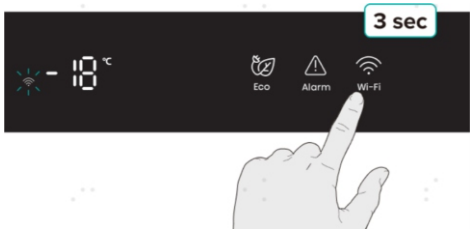

TYPE 2:



step1 step2

3. Ensure Bluetooth is enabled on your phone and open the ConnectLife app. Look for the pop-up indicating that a new appliance has been found. Tap the button on the pop-up and follow the instructions to proceed.
4. If a pop-up doesn't appear, tap the button called "Add appliance" or "+" in the app.
5. Locate "Refrigerator" in the device list and select it.
6. Follow the instructions in the app connect your refrigerator. Once the setup is complete, your refrigerator will appear on your home screen.

CLEANING AND CARE

- For hygiene, clean the appliance (exterior and interior accessories) regularly at least every two months.
- Ensure the appliance is completely dry before switching back on and plugging back into the mains socket.
- Wipe the inside of the appliance with a weak solution of bicarbonate of soda, and then rinse with warm water using a wrung-out sponge or cloth.
- Take care to keep door seals clean. Sticky food and drinks can cause seals to stick to the cabinet. Wash the seals with a mild detergent and warm water. Rinse and dry them thoroughly after cleaning.
- This product contains a light source of energy efficiency class G.
- For more cleaning details, please refer to the E-manual.

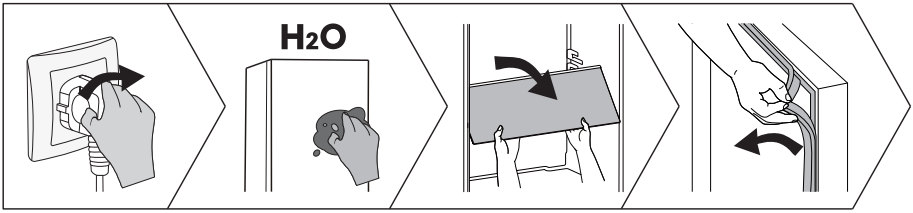

HELPFUL HINTS AND TIPS

Energy saving tips

We recommend that you follow the tips to save energy.

- Try to avoid keeping the door open for long periods.
- Ensure the appliance is away from any sources of heat.
- Don't set the temperature colder than necessary.
- Don't store warm food or evaporating liquid in the appliance.

Switching off your appliance

If the appliance needs to be switched off for an extended period, the following steps should be taken prevent mould on the appliance.

1. Remove all food.
2. Remove the power plug from the mains socket.
3. Clean and dry the interior thoroughly.
4. Ensure that all the doors are wedged open slightly to allow air to circulate.

- Please refer to the E-manual for more information.

TROUBLESHOOTING

- If you experience a problem with your appliance or are concerned that the appliance is not functioning correctly, you can carry out the following easy checks before calling for service.
- **NOTE:** You can find more relevant information in the E-manual.

⚠ WARNING

Don't try to repair the appliance yourself. If the problem persists after you have made the checks mentioned below, contact a qualified electrician, authorized service engineer or the shop where you purchased the product.

⚠ DANGER

Risk of child entrapment. Before you throw away your old refrigerator or freezer:
- Take off the doors.
- Leave the shelves in place so that children may not easily climb inside.

Problem	Possible cause & Solution
Appliance is not working correctly	Check whether the power cord is plugged into the power outlet properly.
	The ambient temperature is too low. Try setting the chamber temperature to a colder level to solve this problem.
A layer of frost occurs in the compartment	Check that the air outlets are not blocked by food and ensure food is placed within the appliance to allow sufficient ventilation. Ensure that the door can be fully closed.
Temperature inside is too warm	You may have left the doors open too long or too frequently; or the doors are kept open by some obstacle; or the appliance is located with insufficient clearance at the sides, back and top.
Unable to connect appliance to Wi-Fi network	The Wi-Fi password was entered incorrectly, or the network could not be found. For specific network configuration operations, please refer to the electronic manual.

DISPOSAL OF THE APPLIANCE

It is prohibited to dispose of this appliance as household waste.

Packaging materials

Packaging materials with the recycle symbol are recyclable. Dispose of the packaging into a suitable waste collection container to recycle it.

Before disposal of the appliance

1. Pull out the mains plug from the mains socket.
2. Cut off the power cord and discard with the mains plug.

⚠ WARNING

Refrigerators contain refrigerant and gases in the insulation. Refrigerant and gases must be disposed of professionally as they may cause eye injuries or ignition. Ensure that tubing of the refrigerant circuit is not damage prior to proper disposal.

	Correct Disposal of this product
	This marking indicates that this product should no be disposed with other household wastes throughout the EU. To prevent possible harm to the environment or human health from uncontrolled waste disposal, recycle it responsibly to promote the sustainable reuse of material resources. To return your used device, please use the return and collection systems or contact the retailer where the product was purchased. They can take this product for environmental safe recycling.

SUGGESTION OF USING THE APPLIANCE

To avoid contamination of food, please respect the following instructions:

- Opening the door for long periods can cause a significant increase of the temperature in the compartments of the appliance.
- Clean regularly surfaces that can come in contact with food and accessible drainage systems.
- Clean water tanks if they have not been used for 48h; flush the water system connected to a water supply if water has not been drawn for 5 days.(Special for models with water tanks)
- Store raw meat and fish in suitable containers in the refrigerator, so that it is not in contact with or drip onto other food.
- Two-star frozen-food compartments are suitable for storing pre-frozen food, storing or making ice-cream and making ice cubes.
- One-, two- and three-star compartments are not suitable for the freezing of fresh food.

SUGGESTION OF USING THE APPLIANCE

- If the refrigerating appliance is left empty for long periods, switch off, defrost, clean, dry, and leave the door open to prevent mould developing within the appliance.
- **NOTE:** The information below is for reference only, as functions may vary by models. Please get more details in the E-manual.

Order	Compartments type	Target storage temp.[°C]	Appropriate food	Storage life
1	Fridge	+2~+8	Eggs, cooked food, packaged food, fruits and vegetables, dairy products, cakes, drinks and other foods which are not suitable for freezing	/
2	Four-star	≤-18	Seafood, freshwater aquatic products and meats	≤3 months
3	Three-star	≤-18		
4	Two-star	≤-12		≤2 months
5	One-star	≤-6		≤1 month
6	Zero-star	-6~0	Fresh pork, beef, fish, chicken, some packaged processed foods, etc. Partially packed/wrapped up encapsulated processed foods (non-freezable foods)	≤3 days
7	Chill	-3~+3	Seafood, pork, beef, chicken, freshwater aquatic products, etc.	2~7 days
8	Fresh Food	0~+4	Fresh pork, beef, fish, chicken, cooked food, etc.	≤3 days
9	Wine	+5~+20	Red wine, white wine, sparkling wine, etc.	/

Declaration of conformity

The company declares that the device with the function Connectlife complies with the essential requirements and other relevant provisions of Directive 2014/53/EU. The detailed Declaration of Conformity can be found at the web address https://auid.connectlife.io on the page of your device among the additional documents.

Hisense

life reimagined

Customer support line (for UK mainland and Northern Ireland only): 0191 387 0804, Southern Ireland customers please contact your Retailer.

Hisense UK Ltd

Ground floor Munroe Court

White Rose Office Park

Millshaw Park Lane Leeds

LS11 0EA