gorenje

EN GB IE

USER MANUAL

WASHING MACHINE

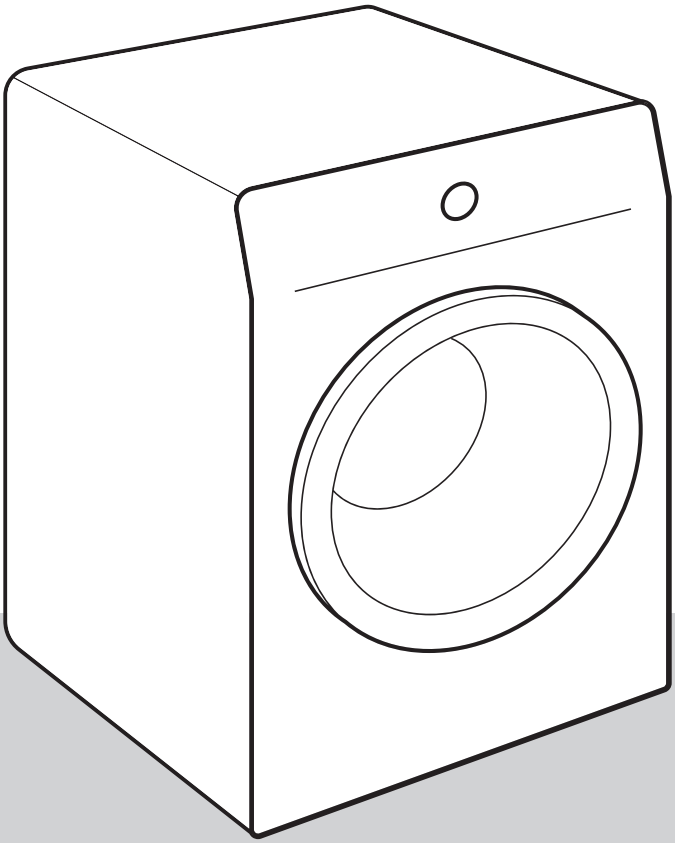

Life is complicated today. Let's make laundry care simple! Your new washing machine uses innovative technology and latest achievements in laundry care to help you simplify your daily household chores.
The latest technology used in our washing machine ensures the gentlest care for each garment with minimum creasing. At the same time, your washing machine will be easy on the environment, owing to its highly efficient use of power, water and detergent.

This washing machine is intended solely for household use. Please do not use it for any laundry labelled as not suitable for machine washing.

The following symbols are used throughout the manual and they have the following meanings:

INFORMATION!
Information, advice, tip, or recommendation

WARNING!
Warning – general danger

ELECTRIC SHOCK!
Warning – danger of electric shock

HOT SURFACE!
Warning – danger of hot surface

DANGER OF FIRE!
Warning – danger of fire

It is important that you carefully read the instructions.

Contents

SAFETY PRECAUTIONS **5**
Child safety 8
Danger of hot surface 9

WASHING MACHINE DESCRIPTION **10**
Technical data 11
Compliance information 12

Control unit **13**

INSTALLATION AND CONNECTION **15**
Removing the blocking rods 15
Moving and transport after installation 16
Selecting the room 16
Adjusting the washing machine feet 17
Positioning the washing machine 18
Connection to water supply 20
Connecting and securing the water discharge hose 22
Connecting to the power mains 23

BEFORE USING THE APPLIANCE FOR THE FIRST TIME **24**
Connecting the appliance to the ConnectLife application 25

WASHING PROCESS, STEP BY STEP (1–7) **28**
Step 1: Heed the labels on the laundry 28
Step 2: Preparing the washing process 29
Step 3: Choosing the washing programme 32
Program chart 33
Remote control of wash using the app 39
Step 4: Selecting extra functions 40
Step 5: Selecting additional functions 46
Extra function table 47
Step 6: Starting the washing programme 49
Step 7: End of the washing programme 49

INTERRUPTIONS AND CHANGING THE PROGRAMME **50**
Manual interruption 50
Personal settings 50
AdaptTech 50
Personal settings menu 50
Pause button 50
Adding/removing laundry during washing machine operation 51
Errors 51
Power supply failure 51
Opening the door (pause/cancel/change programme) 51
Displaying the number of completed wash cycles 52

CLEANING AND MAINTENANCE **53**
Cleaning the dispenser tray 53
Cleaning the water supply hose, detergent dispenser housing, and rubber door gasket 54
Cleaning the pump filter 55
Cleaning the washing machine exterior 56

TROUBLE-SHOOTING **57**
What to do ...? 57
Troubleshooting and error table 57
Service 63

RECOMMENDATIONS FOR WASHING AND ECONOMIC USE YOUR WASHING MACHINE **65**
Stain removal tips 68
Low standby mode 69

TYPICAL CONSUMPTION TABLE **70**

LABEL **75**

PRODUCT INFORMATION SHEET **76**

DISPOSAL **78**

SAFETY PRECAUTIONS

 **Carefully read the instructions for use before using the washing machine.**

Please, do not use the washing machine without reading and understanding these instructions or use first.

These instructions for use of a washing machine are supplied with different types or models of washing machines. Therefore, they may include descriptions of settings or equipment that are not available in your washing machine.

Failure to observe the instructions for use or inappropriate use of the washing machine may result in damage to the laundry or the appliance, or injury to the user. Keep the instruction manual handy, near the washing machine.

This appliance is intended to be used in household and similar applications, such as:

- staff kitchen areas in shops, offices and other working environments;
- farm houses;
- by clients in hotels, motels and other residential type environments;
- bed and breakfast type environments.

This appliance must not be used in:

- areas for communal use in blocks of flats or launderettes.

This appliance is not intended for use by persons (including children) with reduced physical, sensory or mental capabilities, or lack of experience and knowledge, unless they have been given supervision or instruction concerning use of the appliance by a person responsible for their safety.

⚠ **WARNING!**
The washing machine may only be used with the supplied power cord.

⚠ **ELECTRIC SHOCK!**
To avoid danger, a **damaged power cord** may only be replaced by the manufacturer, a service technician, or an authorized person.

⚠ **WARNING!**
Do not connect the washing machine to power mains using an external switching device such as a programme timer, or connect it to power mains that is regularly switched on and off by the power supply provider.

Instructions for use are available on our website at www.gorenje.com.

Follow the instructions for correct installation of the Gorenje washing machine and connection to the water and power mains (see chapter »INSTALLATION AND CONNECTION«).

Connection to water and power supply has to be executed by an adequately trained technician or expert.

Any repair and maintenance pertaining to safety or performance should be done by trained experts.

Do not install the washing machine in a room where the temperature can drop to below 5°C, as washing machine parts may be damaged in case of water freezing.

The ventilation openings in the base of washing machine must not be obstructed by a carpet.

To connect the washing machine to water supply, make sure to use the supplied water supply hose and gaskets. Water pressure must be between 0.05 and 0.8 MPa (0.5–8 bar).

Always use a new water supply hose to connect the washing machine to water supply; do not reuse an old water supply hose.

The end of the water discharge hose should reach into a water drain line.

Before the start of the washing cycle, press the door on the indicated spot until it locks into place. The door cannot be opened during washing machine operation.

We recommend removing any impurities from the washing machine drum before the first wash using the Cotton 90°C programme (see PROGRAMME TABLE).

After the washing cycle, close the water tap and pull out the washing machine plug from the power socket.

Only use the washing machine for washing laundry, as described in the instruction manual. The machine is not intended for dry cleaning.

No silver ions are released during the washing programme.

Only use agents for machine washing and care of laundry. We shall not be responsible for any damages or discolouration of gaskets and plastic parts resulting from incorrect use of bleaching or colouring agents.

When descaling, only use descaling agents with added anti-corrosion protection. (Only use non-corrosive descaling agents.) Follow the manufacturer's instructions. Finish the descaling process with several rinse cycles or by running the Drum clean (Self-cleaning programme) in order to remove any residual acid (e.g. vinegar etc.).

⚠ **DANGER OF FIRE!**
Do not use detergents that contain solvents as this could lead to release of poisonous gases, damage to the washing machine, and risk of fire and explosion.

Child safety

⚠ **WARNING!**
Children of less than 3 years should be kept away unless continuously supervised.

Children should be supervised to ensure that they do not play with the appliance.

Keep the detergent and conditioner out of reach of children.

Activate the child lock. See chapter »CHOOSING THE SETTINGS/Child lock«.

Before closing the washing machine door and running the programme, make sure there is nothing except laundry in the drum (e.g. if a child climbed into the washing machine drum and closed the door from the inside).

The washing machine is made in compliance with all relevant safety standards.

This appliance can be used by children aged from 8 years and above and persons with reduced physical, sensory or mental capabilities or lack of experience and knowledge if they have been given supervision or instruction concerning use of the appliance in a safe way and understand the hazards involved.

Children shall not play with the appliance.

Cleaning and user maintenance shall not be made by children without supervision.

Danger of hot surface

⚠ **HOT SURFACE!**
At higher washing temperatures, the door glass will heat up. Be careful to avoid burns. Make sure children do not play near the door glass.

WASHING MACHINE DESCRIPTION

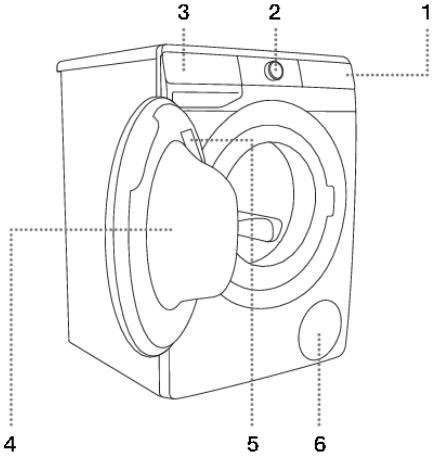

FRONT

1. Touch control unit
2. On/off and program selector knob
3. Detergent compartment
4. Door
5. Rating plate
6. Pump filter

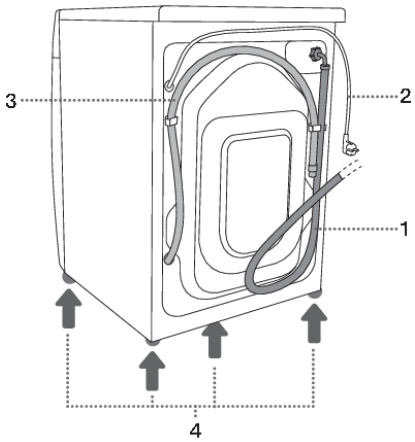

BACK

1. Water supply hose
2. Power cord
3. Water discharge hose
4. Adjustable feet

Technical data

(depending on the model)

Rating plate with basic information about the washing machine is located on the inner side of the washing machine door (see chapter »WASHING MACHINE DESCRIPTION«).

Maximum load	See rating plate		
Width	600 mm	600 mm	600 mm
Height	850 mm	850 mm	850 mm
Washing machine depth (a)	465 mm	545 mm	610 mm
Depth with door closed	495 mm	577 mm	640 mm
Depth with door open (b)	980 mm	1062 mm	1125 mm
Washing machine weight	X kg (depending on the model)		
Rated voltage	See rating plate		
Nominal power	See rating plate		
Connection	See rating plate		
Water pressure	See rating plate		
Current	See rating plate		
Frequency	See rating plate		
Maximum load	See rating plate		

Rating plate

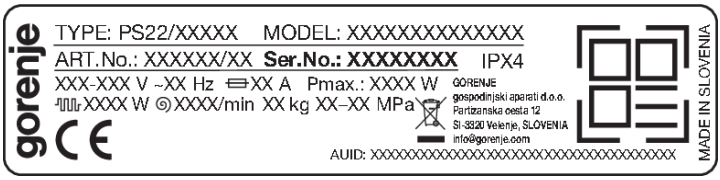

Link to the EU EPREL database

From 1 March 2021, information on energy labelling and ecodesign requirements is available in the EU EPREL product database.

The QR code on the energy label supplied with the appliance contains a web link through which you can find your registered appliance in the EU EPREL database.
Information regarding the performance of the product can also be found in the EU EPREL database, which is accessible via the link https://eprel.ec.europa.eu, where you have to enter the model and product number; both are indicated on the rating plate on the appliance. On the website www.theenergylabel.eu you can find more detailed information about the energy label.

Keep the energy label in case it is needed in the future, together with the user manual and other documents supplied with this appliance.

Compliance information

Radio equipment type (depending on the model)	HL3215STG HLW3215-TG HLW3215-TG01
Wi-Fi	
Operating frequency range	2.4000 GHz – 2.4835 GHz
Maximum output power	≤10 dBm/MHz (EIRP) (Antenna gain <10 dBi)
Maximum antenna gain	Gain: 0 dBi
Bluetooth	
Operating frequency range	2.400 GHz – 2.4835 GHz
Carrier output	6 dBm (≤ 10 dBm)
Emission type	F1D

Declaration of conformity

The company declares that the device with the function **Connect**Life complies with the essential requirements and other relevant provisions of Directive 2014/53/EU. The detailed Declaration of Conformity can be found at the web address https://auid.connectlife.io on the page of your device among the additional documents.

Control unit

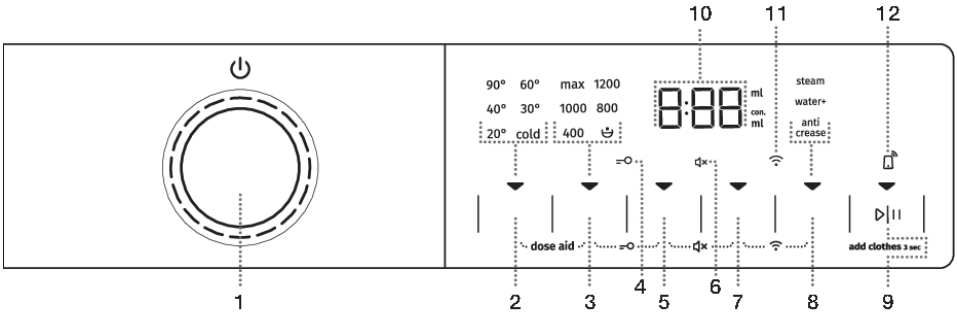

1	**Washing machine ON/OFF and PROGRAM SELECTOR DIAL.** To **TURN ON** the washing machine, rotate the program selector knob left or right. To **TURN OFF** the washing machine, rotate the program selector knob to position **OFF** ⏻. To **SELECT** a washing programme, rotate the knob left or right. The signal light next to the selected program lights up.
2	**TEMP.** (WASHING TEMPERATURE) Option to set washing temperature. When the appliance is turned on, the ▼ indicator on the button lights up.
3	• **SPIN** (SPINNING RATE) • PUMP STOP • DRAIN – no lighting Option to set the spinning rate. When the appliance is turned on, the ▼ indicator on the button lights up.
2+3	**DOSE AID** Information on recommended amount of powder and liquid detergent, according to the selected settings and the amount Press the positions 2+3 and hold them for 3 seconds.
4	**CHILD LOCK** symbol lighting
5	**FAST** (FAST) Option to set a shorter washing programme time. When the appliance is turned on, the ▼ indicator on the button lights up.
3+5	**Child lock ON/OFF** Press the positions 3+5 and hold them for 3 seconds.
6	Lighting of the **SOUND OFF** symbol
7	**DELAY END** (DELAY END) Option to set the time of washing programme completion. When the appliance is turned on, the ▼ indicator on the button lights up.
5+7	**Sound ON/OFF** Press the positions 5+7 and hold them for 3 seconds.

8	**EXTRAS** (ADDITIONAL FUNCTIONS) • **STEAM** (STEAM) Option to activate the laundry refresh function; • **WATER+** (EXTRA WATER) Option to set a higher water level; • **ANTI CREASE** (CREASE PREVENTION) Option to activate the gentle wash function. When the appliance is turned on, the ▼ indicator on the button lights up.
7+8	**MENU Wi-Fi connections (CONNECT)** (CONNECTION) Press the positions 7+8 and hold them for 3 seconds.
9	**START/PAUSE ▷|| BUTTON** The button has 4 functions: • **START** – starting the washing programme (start the programme with a brief press on the button); • **PAUSE** – pause the washing programme (if you briefly press the button again, you can temporarily stop appliance operation); • **ADD CLOTHES** – adding clothes into the drum during the washing progress (hold the button for 3 seconds); • **SAVING PERSONAL SETTINGS** (hold the button for 5 seconds). When the appliance is turned on, the ▼ indicator on the button lights up.
10	The following is displayed on the **DISPLAY UNIT**: • available functions; • time remaining to programme completion; • information for the user.
11	Lighting of the symbol **CONNECT** (CONNECTION) The symbol is lit at all times when REMOTE START (REMOTE START) is enabled, even when the appliance is not in operation or is in standby mode.
12	Lighting of the symbol **REMOTE START** The symbol is lit at all times when REMOTE START is enabled, even when the appliance is not in operation or is in standby mode.

INSTALLATION AND CONNECTION

INFORMATION!
Remove all packaging. When removing the packaging, make sure not to damage the dryer with a sharp object.

Removing the blocking rods

WARNING!
Before the first use of the appliance, transport rods must be removed. A blocked washing machine may be damaged when it is switched on for the first time. Warranty shall be void in cases of such damage!

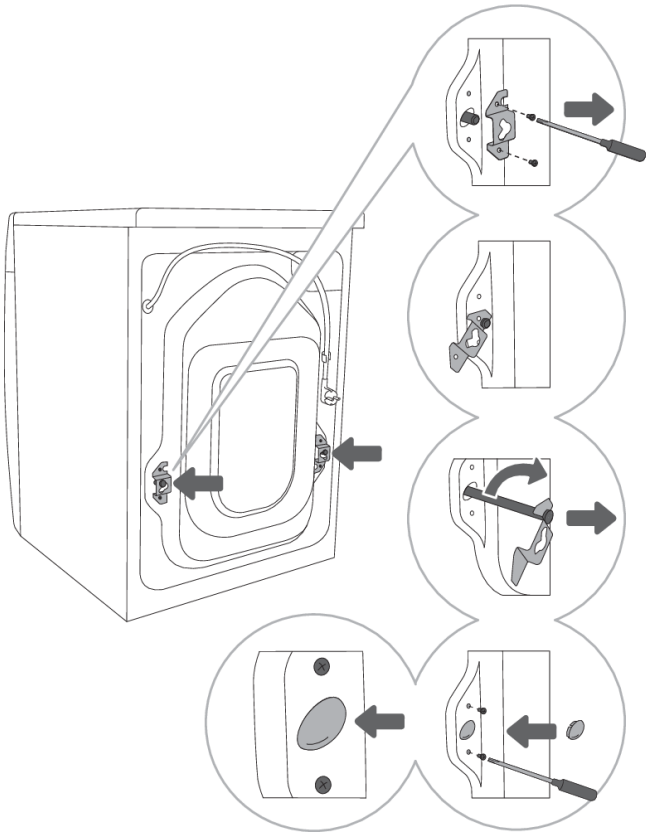

1 Move the hoses and undo the screws on the back of the washing machine. Remove the two angular pieces.

2 Slide the angular pieces onto the grove in the blocking rod; before doing so, rotate the right angular piece to the opposite side.

3 Use the angular pieces to rotate the blocking rods by 90°and pull them out.

4 Cover the two holes through which the blocking rods were inserted with plastic plugs, and redo the screws that you undid in step 1.
The plastic plugs are supplied in the bag with the washing machine instruction manual.

Moving and transport after installation

INFORMATION!

If you wish to move the washing machine after it has been installed, the angular pieces and at least one blocking rods have to be re-installed to prevent vibration damage to the washing machine during transport (see chapter »INSTALLATION AND CONNECTION/Removing the blocking rods«). If you lost the angular pieces and the blocking rods, they can be ordered from the manufacturer.

Selecting the room

INFORMATION!

Floor on which the washing machine is placed must have a concrete base. It should be clean and dry; otherwise, the washing machine may slide. Also, clean the bottom surface of adjustable feet.

INFORMATION!

The washing machine must stand level and stable on a solid base.

INFORMATION!

If the washing machine is placed on an elevated stable base, the washing machine has to be additionally secured against tipping.

Adjusting the washing machine feet

Use a water scale and spanner No. 32 (for feet) and 17 (for the nut). The spanners are not supplied.

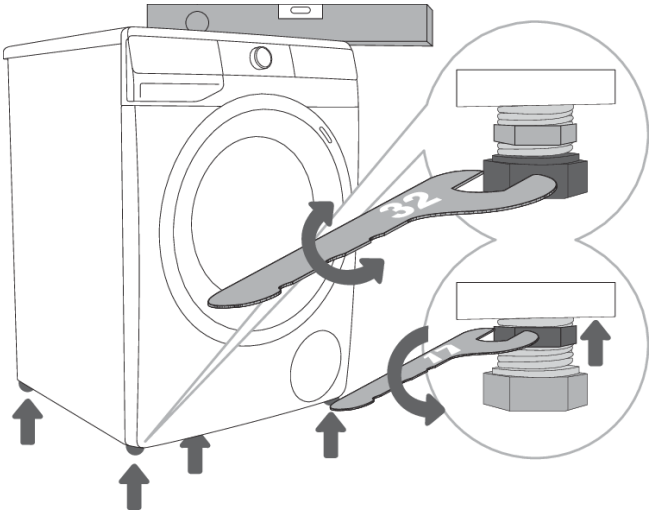

1 Level the washing machine in longitudinal and traverse direction by rotating the adjustable feet.

2 After adjusting the height of the feet, firmly tighten the jam nuts (counter nuts) using a spanner No 17, by turning them towards the bottom of the washing machine ⬆ (see figure).

INFORMATION!
Incorrect levelling of the washing machine with the adjustable legs may cause vibration, appliance sliding across the room, and loud operation. Incorrect levelling of the washing machine is not subject to warranty.

INFORMATION!
Sometimes, unusual or louder noise may appear during appliance operation; these are mostly the result of improper installation.

Positioning the washing machine

If you also have a Gorenje dryer of corresponding (same) dimensions, it can be placed on top of the Gorenje washing machine (in this case, vacuum feet must be used) or next to it (figures 1 and 3).

If your Gorenje washing machine is smaller (minimum depth 545 mm), than your Gorenje dryer, then the dryer support has to be purchased extra (figure 2). The supplied vacuum feet must be used; they are designed to prevent the dryer from slipping.

Additional equipment (dryer support (a), vacuum feet (b) and wall fixing bracket (c)) can be purchased at the service centre.

The surface on which the appliance is placed should be clean and level.

Gorenje washing machine onto which you intend to place the Gorenje dryer should hold the weight of the Gorenje dryer (see chapter »WASHING MACHINE DESCRIPTION/Technical information«).

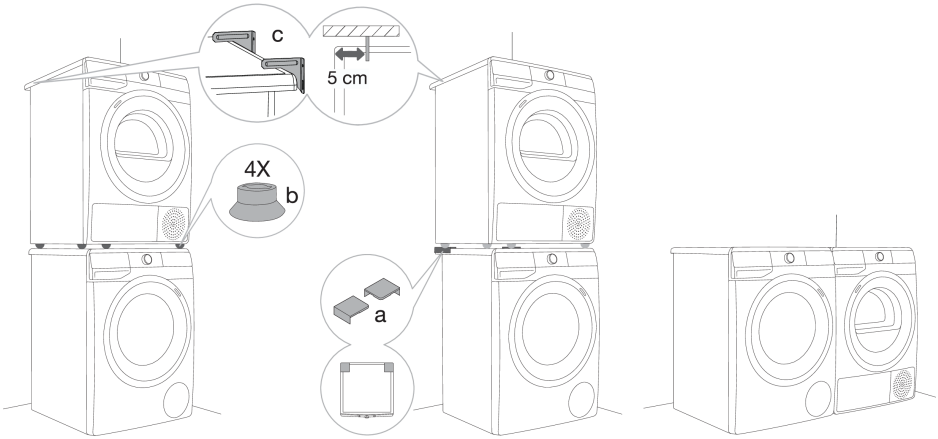

1 **2** **3**

Washing machine installation clearances

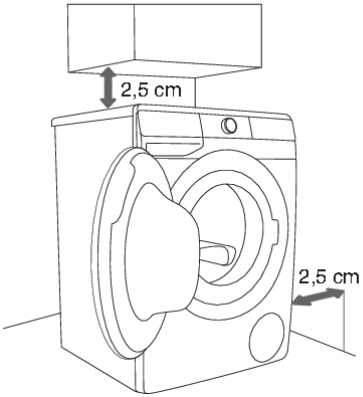

1

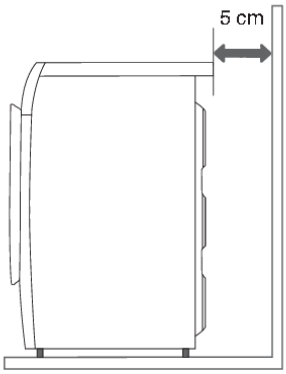

2

INFORMATION!
The washing machine may not be in contact with a wall or adjacent furniture. For optimum washing machine operation, we recommend observing the clearances from the walls as indicated in the figure. In case of failure to observe the minimum required clearances, safe and correct washing machine operation cannot be ensured. Moreover, overheating can also occur (figures 1 and 2).

INFORMATION!
Installing the washing machine under a countertop is not recommended.

Opening the washing machine door (bird's-eye view)

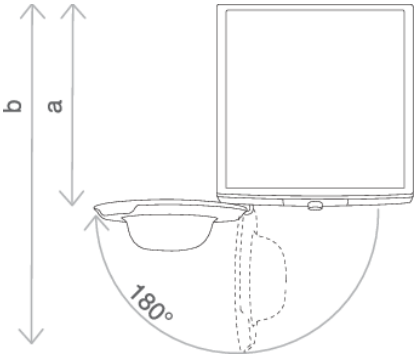

See chapter »WASHING MACHINE DESCRIPTION/Technical information«).
a = washing machine depth
b = depth with door open

Connection to water supply

Attach the hose to the water tap by screwing it onto the thread.

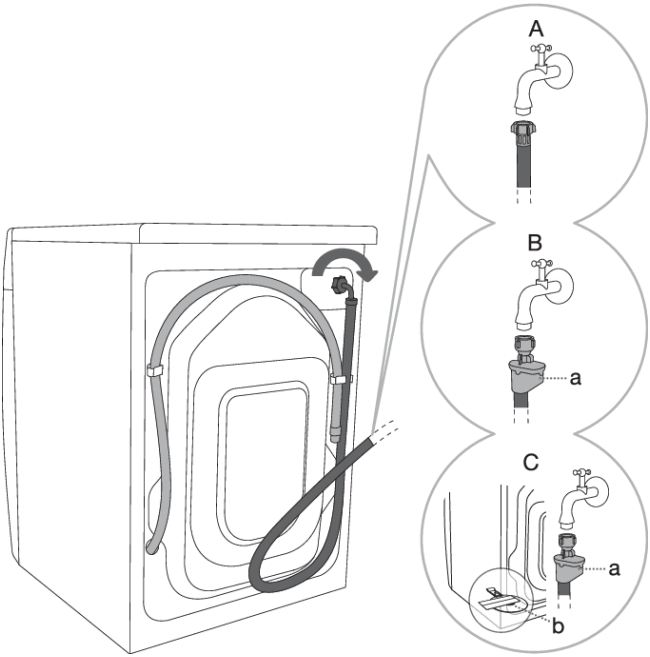

A STANDARD CONNECTION

B AQUA - STOP CONNECTION

C TOTAL AQUA - STOP CONNECTION (WITH A FLOAT)

INFORMATION!

For normal washing machine operation, the pressure in the water mains should be between 0.05 and 0.8 MPa (0.5–8 bar). Minimum dynamic water pressure can be determined by measuring the water flow.

In 30 seconds, 1.2 litres of water should flow from a fully open tap.

INFORMATION!

Tighten the water supply hose by hand, firmly enough for the hose to have a good seal (max. 2 Nm). After connecting the hose, the seal must be checked for any leaks. Do not use pliers or similar tools when connecting the hose as this could damage the nut thread.

INFORMATION!

Only use the water supply hose supplied with the appliance. Do not use any used or other hoses.

INFORMATION!

When connecting the water supply hose, make sure to connect it in a way that allows adequate and unobstructed water supply.

AQUA - STOP connection
(depending on the model)

If an internal tube or hose is damaged, a shut-off system is activated that cuts the water supply to the washing machine. In such case, the control glass (a) will turn red. Replace the water supply hose.

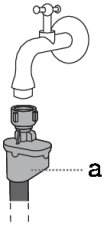

TOTAL AQUA - STOP connection (with a float)
(depending on the model)

If an internal tube or hose is damaged, a shut-off system is activated that cuts the water supply to the washing machine. In such case, the control glass (a) will turn red. Replace the water supply hose.

If there is water on the bottom of the washing machine, the float (b) will rise and trigger a shut-off system to cut the water supply to the washing machine; washing process is stopped, water supply is shut off, the appliance engages the pump, and signals an error.

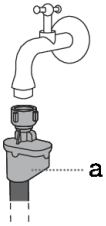



Connecting and securing the water discharge hose

Feed the water discharge hose into a washbasin or a bathtub, or connect it directly to a drain (minimum drain connection diameter is 4 cm). The vertical distance from the floor to the end of the discharge hose may be no more than 100 cm and no less than 60 cm. It can be attached in three ways (A, B, C).

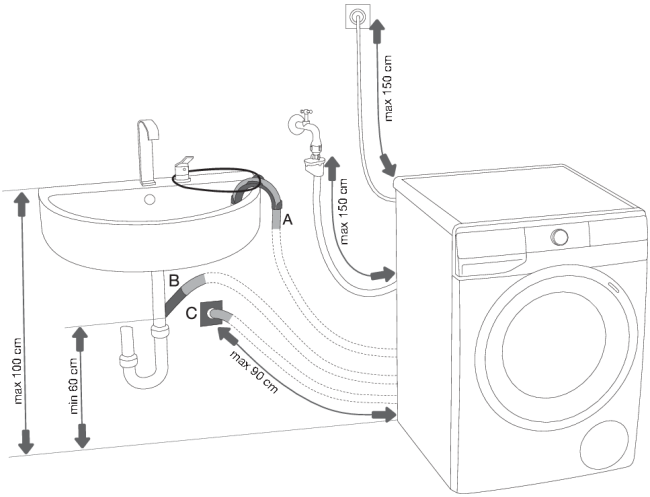

A Discharge hose end may be placed over a washbasin or a bathtub. B Use a string fed through the opening in the elbow support to attach the hose and prevent it from slipping to the floor.

B Discharge hose may also be attached directly to the washbasin drain.

C Discharge hose can also be attached to a wall drain with a trap; such trap should be properly installed to allow cleaning.

D The discharge hose has to be attached and affixed to the pin on the back of the washing machine, as shown in the figure.

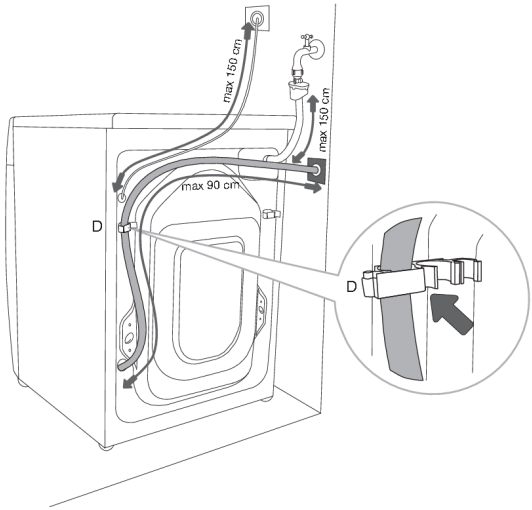

INFORMATION!
If the drain hose is not correctly attached, safe and correct washing machine operation cannot be ensured.

Connecting to the power mains

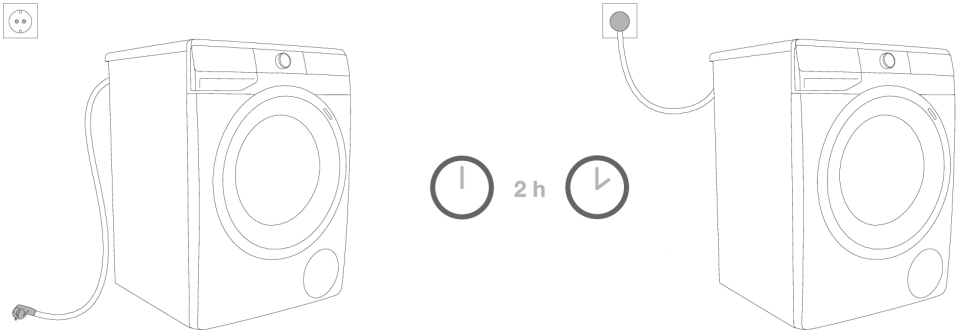

ELECTRIC SHOCK!
Before connecting the washing machine to the power mains, wait for at least 2 hours until it reaches room temperature.

Connect the washing machine to a grounded power outlet. After installation, the wall outlet should be freely accessible. The outlet should be fitted with an earth contact (in compliance with the relevant regulations).

Information on your washing machine is indicated on the rating plate (see chapter »WASHING MACHINE DESCRIPTION/Technical information«).

ELECTRIC SHOCK!
We recommend using over-voltage protection to protect the appliance in case of a lightning strike.

WARNING!
The washing machine may not be connected to the power mains using an extension cord.

INFORMATION!
Do not connect the washing machine to an electrical outlet intended for an electric shaver or hair dryer.

INFORMATION!
Any repair and maintenance pertaining to safety or performance should be done by trained experts.

BEFORE USING THE APPLIANCE FOR THE FIRST TIME

Make sure the washing machine is disconnected from the power mains; then, open the door towards you (figures 1 and 2).

Before first use, clean the washing machine drum with a soft moist cotton cloth and water, or use the Cotton 90°C programme. There should be no laundry in the washing machine drum; the drum should be empty (figures 3 and 4).

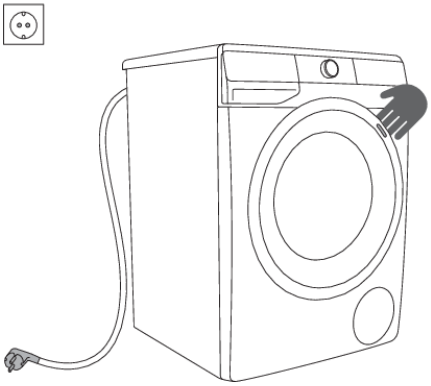

1

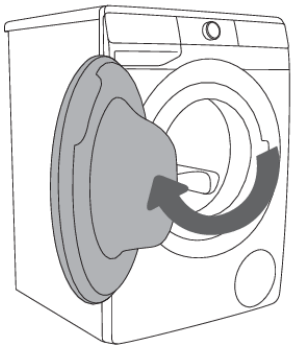

2



3

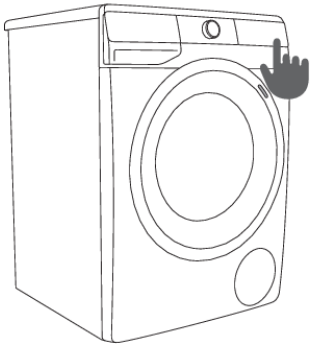

4

WARNING!
Do not use any solvents or cleaning agents that could damage the washing machine (please observe the recommendations and warnings provided by the cleaning agent manufacturers).

Connecting the appliance to the ConnectLife application

ConnectLife is a smart home platform that connects people, devices and services. The **Connect**Life application includes advanced digital services and carefree solutions that allow users to monitor and control appliances, receive notifications from a smartphone, and update software (supported features may vary depending on your appliance and the region/country in which you are located).

To connect your smart device, you need a home Wi-Fi network (only 2.4 GHz networks are supported) and a smartphone equipped with the application **Connect**Life.

To download the **Connect**Life application, scan the QR code or search for **Connect**Life in your favourite app store.

1. Install the **Connect**Life application and create an account.
2. In the **Connect**Life application, go to the »Add device« menu and select the appropriate type of device. Then scan the QR code (it can be found on the nameplate of the appliance; you can also enter the AUID/SN number manually).
3. The application then guides you through the entire process of connecting the appliance to your smartphone.
4. After a successful connection, the appliance can be operated remotely via the mobile application.

Useful tips for your smart device

Where to find the QR code for the devices required by the App during the installation process?

The QR code can be found on the warranty card or on the rating plate of the appliance.

How to enable Wi-Fi on the device? [Con

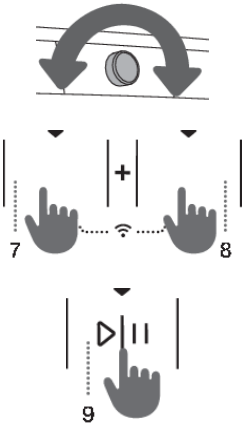

Check that the appliance is switched on; the programme selection button can be in any position. Then do the following:

- In the **Connect**Life app, open the add device menu.
- Follow the instructions in the application **Connect**Life, where you will pair your phone and appliance and add the appliance to your home Wi-Fi network.
  - Select the type of appliance.
  - Scan the QR code (it can be found on the warranty card or on the rating plate of the appliance).
- On the appliance:
  - Simultaneously press the positions (7+8). A countdown will start 3-2-1 and OFF will appear on the appliance.
  - Press the button (8) to switch on Wi-Fi; the display will show On.
  - Press the button (9) START/PAUSE. The display will show [on.
  - Press again the button (9) START/PAUSE. A 5-minute countdown will begin on the appliance.

- In the **Connect**Life app, instructions will guide you through the process of entering the appropriate data for your appliance to connect to your home network.

How to enable remote start of the appliance?

Move the programme selection button to **Connect**Life/**REMOTE CONTROL** (remote control). Press the (9) START/PAUSE button (the door must be closed).

How to add a user? PAr

Check that the appliance is switched on; the programme selection button can be in any position. Then do the following:

- In the **Connect**Life app, open the add device menu.
- Follow the instructions in the application **Connect**Life where you will pair the phone and the appliance.
  - Select the type of appliance.
  - Scan the QR code (it can be found on the warranty card or on the rating plate of the appliance).
- On the appliance:
  - Simultaneously press the positions (7+8). A countdown will start 3-2-1 and Con will appear on the appliance.
  - Press the button (8); the display will show PAr.
  - Press the button (9) START/PAUSE. A 3-minute countdown will start on the appliance.
- You can then complete and confirm the setting in the app.

How to remove the users (UnPair)? UnP

Check that the appliance is switched on; the programme selection button can be in any position. Then do the following:

On the appliance:

- Simultaneously press the positions (7+8). A countdown will start 3-2-1 and Con will appear on the appliance.
- Repeatedly press (8); until the display shows UnP.
- Press the button (9) START/PAUSE. A 1-minute countdown will start on the appliance.

INFORMATION!

This step will remove all active users of the appliance. If you want to operate the appliance remotely again, you will need to repeat the process of adding a user PAr.

Which Wi-Fi router can be used?

Only 2,4 GHz networks are supported. If the **Connect**Life app cannot find your local network during the connection set-up process, check the following:

- your router is operating at the frequency of 2.4 GHz,
- your network is hidden, and
- your signal is strong enough.

Do you have more questions?

Please visit us at **www.connectlife.io** or contact us at **hello@connectlife.io**.

Remotely upgrading the software

Check the software update options in the app **Connect**Life.

WASHING PROCESS, STEP BY STEP (1–7)

Step 1: Heed the labels on the laundry

Normal wash; Sensitive laundry					
	Max. washing temp. 95°C		Max. washing temp. 40°C		Hand wash only
	Max. washing temp. 60°C		Max. washing temp. 30°C		Do not wash
Bleaching					
	Bleaching in cool water		Bleaching not allowed		
Dry cleaning					
	Dry cleaning with all agents		Petroleum solvent R11, R113		
	Dry cleaning in kerosene, pure alcohol, and R113		Dry cleaning not allowed		
Ironing					
	Hot ironing, max. 200°C		Hot ironing, max. 110°C		
	Hot ironing, max. 150°C		Ironing not allowed		
Drying					
	Dry flat (place on a flat surface)		High temperature		
	Drip dry		Low temperature		
	Line dry		Tumble drying not allowed		

Step 2: Preparing the washing process

1. Sort the laundry by type of fabric, colour, soiling, and allowed washing temperature (see PROGRAMME TABLE).
2. Wash the laundry that sheds a lot of fibre or lint separately from other laundry.
3. Empty the pockets. Coins, nails etc. could damage the machine and the fabric.
4. Close the buttons and zippers, tie any ribbons, and turn the pockets inside out; remove any metal clips that could damage the laundry and washing machine interior, or clog the drain.
5. Place very sensitive clothes and small items in a special-purpose laundry washing bag. (The special-purpose laundry bag is available as an optional accessory.)

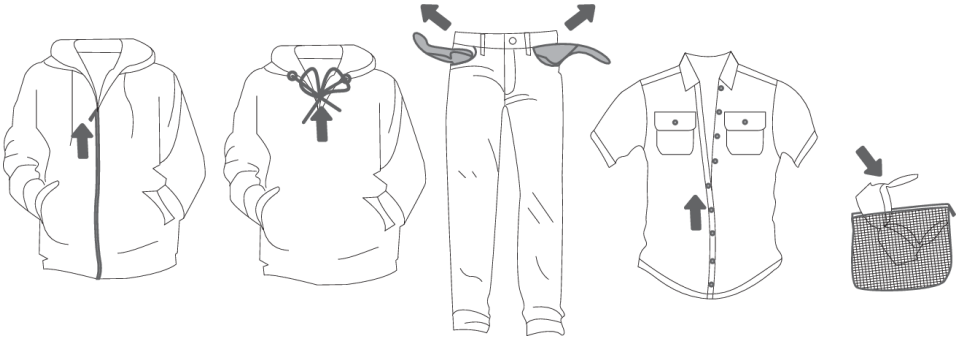

Before using the washing machine, carefully remove any solid objects and particles from the textiles you intend to wash to prevent damage to the appliance or clogging of the pump filter. This includes (also check all pockets and flaps):

- solid objects (e.g., screws, clips, small stones, hay, etc.),
- food residues (e.g., bones, dried dough, etc.),
- dried particles of construction materials (e.g., mortar, sand, mud, etc.).

WARNING!
The manufacturer assumes no responsibility for malfunctions resulting from failure to follow these instructions, which may also affect the validity of the warranty. Furthermore, the manufacturer does not cover service costs in the event of foreign objects in the pump or pump cleaning.

Switching on the washing machine

Use the power cord to connect the washing machine to power mains, and connect the washing machine to water supply.
To turn on the appliance, rotate the program selector knob (1) to any position.
With some models, the washing machine drum is also lit for 5 minutes when the washing machine is switched on (figure 2).
The light in the washing machine drum can also remain lit during appliance operation, if you press the START/**PAUSE** (9) button, as well as after the washing programme is completed.

(The lamp in the washing machine drum is not suitable for any other use.)

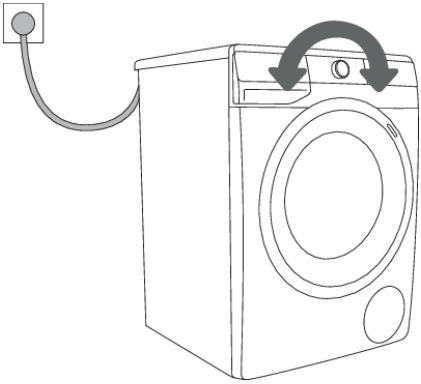

1

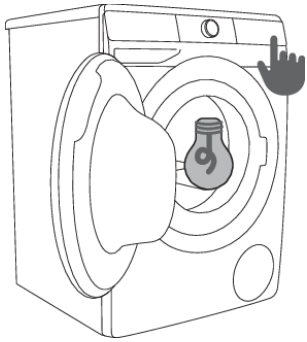

2

INFORMATION!
The lamp in the washing machine drum may only be replaced by the manufacturer, a service technician or an authorized person.

Loading the washing machine

Open the washing machine door by pulling the handle towards you (figure 1).

Insert the laundry into the drum (after making sure the drum is empty) (figure 2).

Make sure that no garment is stuck between the door and the rubber gasket.

Close the washing machine door (figure 3).

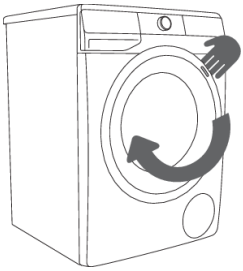

1

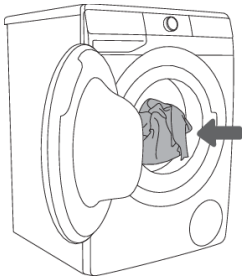

2

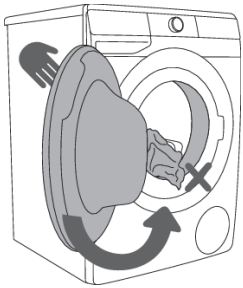

3

Do not overload the drum! See PROGRAMME TABLE and observe your nominal load as indicated on the rating plate.

If the washing machine drum is too full, the laundry will not be washed as thoroughly.

Step 3: Choosing the washing programme

Choose the **programme** by rotating the program selector knob (1) to the left or to the right (depending on the type of laundry and how heavily soiled it is). See PROGRAMME TABLE.

The signal light next to the selected program lights up.

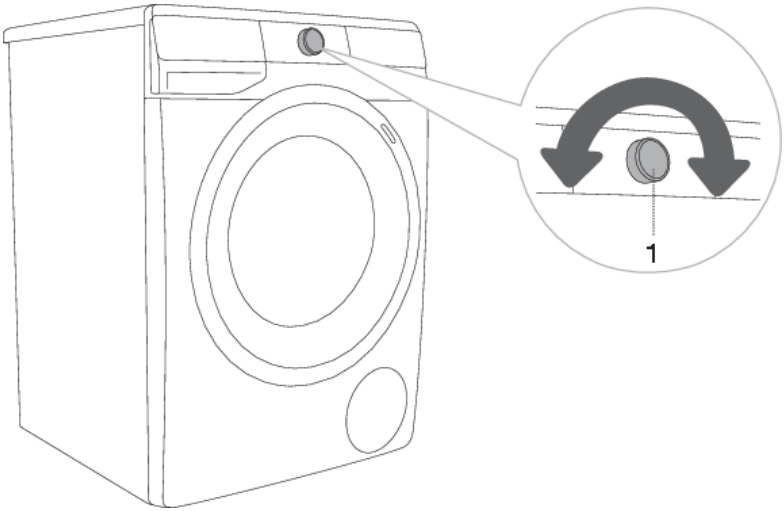

INFORMATION!
During operation, the program selector knob (1) will not rotate automatically.

INFORMATION!
Washing programmes are comprehensive programmes that include all washing stages, including softening and spinning (this does not apply to Partial programmes).

INFORMATION!
Partial programmes are independent programmes. Use them when you feel you do not need the entire washing programme.

Program chart

Program		Max. load	Max. [3]	Programme description
	**Cotton white (Cotton white)** 40°C–90°C	*MAX	MAX[1]	Programme for washing white cotton laundry, towels, bed linen, T-shirts ... The temperature can be set separately; therefore, observe the instructions indicated on the clothing. Spinning speed can be set to your preference. Programme duration and amount of water will be adjusted to the amount of laundry. To reduce creasing, press the (8) **EXTRAS** (EXTRA FUNCTIONS) button before the start of the washing programme, and select the **STEAM** and/or **ANTI CREASE** (CREASE PREVENTION) function.
	**Colour (Colour)** cold–60°C	*MAX	MAX[1]	Programme for coloured laundry made of cotton. The temperature can be set separately; therefore, observe the instructions indicated on the clothing. Spinning speed can be set to your preference. Programme duration and amount of water will be adjusted to the amount of laundry.
	**Mix|Synthetics (Mixed laundry/-Synthetics)** cold–60°C	3,5 kg	1200[2]	Washing programme for delicate clothing made of synthetic and mixed fibres or viscose, and for simple care of cotton. Observe the instructions indicated on the clothing.
	**Wool&Hand (Wool& Hand wash)** cold–40°C	2 kg	800	Delicate washing programme for washing woollens, silk, and clothes that require manual washing. Maximum temperature is 40°C. This programme has a short spinning cycle. Top spinning speed available is 800 rpm.
	**Eco 40-60** [4]	*MAX	MAX[1]	Normally soiled cotton laundry that can be washed at both 40°C and 60°C together in the same cycle. The programme is used to assess compliance with EU ecodesign legislation.
	**Power 59´|32´** 40°C	4 kg	MAX[1]	Programme for smaller amounts of lightly soiled laundry. The washing programme includes intensive tumbling and maximum spinning rate. The programme lasts 59 minutes. When using the **FAST** (FAST) function, the programme lasts 32 minutes.
	**Speed 20´ (Speed 20')** 30°C	2,5 kg	1000[2]	Quick washing programme for lightly soiled laundry that only needs refreshing.

Program		Max. load	Max. 3)	Programme description
	Drum clean (Self-cleaning programme)	0 kg		This programme is used for cleaning the drum and removing the residue of detergent and bacteria. To select the programme, rotate the program selector knob to the left or to the right to the Drum clean (Cleaning programme) position. Other extra functions cannot be selected. The drum must be empty. **Do not add detergent or softener!** You can add some spirit vinegar (approx. 2 dl) or sodium bicarbonate (1 tablespoon or 15 g) for effective descaling. We recommend that you use the programme at least once a month.
	Spin|Drain (Spinning rate | Drain) (Partial programme)	/	MAX[1)]	Use the programme when you only wish to spin the laundry. If you wish to only drain the water from the washing machine, without spinning, press the (3) **SPIN** multiple times, until no indicator (light) is on.
	Rinse&Softening (Rinse& Softening) (Partial programme)	/	MAX[1)]	For softening, starching, or impregnating the washed laundry. It can also be used as a rinse programme, but without added softener. It is completed with an additional rinse. You can also choose **WATER+** (EXTRA WATER) by selecting the extra function (press the (8) **EXTRAS** (EXTRA FUNCTIONS) button before the start of the washing programme).
	Baby (Baby clothes) 40°C–90°C	*MAX	MAX[1)]	For washing clothes requiring special care, such as infant garments. We recommend turning the garments inside out as this will also thoroughly wash out the skin scales or residues of skin treatment products. The programme is a combination of a prolonged heating and an extra rinse that removes any detergent residue. The washing programme includes an automatic prewash and additional rinses. To treat laundry with steam, press the (8) **EXTRAS** (EXTRA FUNCTIONS) button and select the **STEAM** function.
	Shirts (Shirts with steam) cold–40°C	3,5 kg	1200 [2)]	This program is intended for washing garments made of cotton, microfibres and synthetics; for washing collars and cuffs. The wash takes place at a low temperature, with a greater amount of water and gentle tumbling. Preset spinning speed is 800 rpm. To treat laundry with steam, press the (8) **EXTRAS** (EXTRA FUNCTIONS) button and select the **STEAM** function.

Program		Max. load	Max. 3)	Programme description
	Sports (Sportswear) cold–40°C	3,5 kg	1200 2)	Sportswear made of cotton, microfibres and synthetic fibres, at lower spinning rates and a brief final spinning cycle.
	Extra hygiene 40°C–90°C	*MAX	MAX1)	This washing programme is used for washing cotton garments that require special care, such as clothes for people with highly sensitive skin or allergies. We recommend turning the garments inside out, as this will also thoroughly wash out the skin and other residues. To treat laundry with steam, press the (8) **EXTRAS** (EXTRA FUNCTIONS) button and select the **STEAM** function.
	Remote control (Remote control)			Use the Remote control programme to remotely control your appliance (using your phone). You can select all programmes available on your appliance (see chapters »BEFORE USING THE APPLIANCE FOR THE FIRST TIME/Connecting the appliance to a Wi-Fi network« and »WASHING PROCESS, STEP BY STEP (1–7)/Step 3: Remote control of wash using the app«). You can also select additional programs in the app.

* Maximum declared load (MAX) – see rating plate

/ Any load (0 kg – MAX kg)

cold Cold wash

1) Maximum spinning rate (MAX) – see rating plate

2) Depending on the model

3) Maximum spinning rate

4) Test programme for compliance with the Commission Regulation (EU) No. 2019/2023 on ecodesign and Regulation No. 2019/2014 on energy labelling.

Recommendations for detergents under Regulation (EU) No. 1015/2010

Program		Detergent			
		Universal	For coloured laundry	For delicate laundry and wool	Special
	Cotton white (Cotton white)	✓	✓	—	—
	Colour (Colour)	✓	✓	—	—
	Mix|Synthetics (Mixed laundry/-Synthetics)	—	✓	—	—
	Wool&Hand (Wool& Hand wash)	—	—	✓	✓
	Eco 40-60	✓	✓	—	—
	Power 59´|32´	—	✓	✓	—
	Speed 20´ (Speed 20´)	—	✓	—	—
	Drum clean (Self-cleaning programme)	—	—	—	—
	Spin|Drain (Spinning rate | Drain)	—	—	—	—
	Rinse&Softening (Rinse& Softening)	—	—	—	—
	Baby (Baby clothes)	✓	✓	✓	✓
	Shirts (Shirts with steam)	✓	✓	✓	✓
	Sports (Sportswear)	—	✓	✓	—
	Extra hygiene	✓	✓	✓	—

✓Recommendation

—No recommendation

INFORMATION!
In terms of energy and water consumption, programmes that operate at lower temperatures and last longer are generally the most efficient.

INFORMATION!
Noise and residual moisture content are affected by the spinning rate: the higher the spinning rate in the spin cycle, the higher the noise and the lower the residual moisture content.

INFORMATION!
Add powder or liquid detergents according to the manufacturer's instructions, considering the washing temperature, washing program, how soiled the laundry is, and water hardness.

When excessive foaming occurs in the washing machine or foam spills through the dosing container, the washed laundry must be thoroughly rinsed. Choose a washing programme with a large amount of water without using detergent.

INFORMATION!
Maximum amount of laundry in kg (for the Cotton programme) is indicated on the washing machine rating plate (see chapter »WASHING MACHINE DESCRIPTION/Technical information«).

INFORMATION!
Maximum or nominal load applies to laundry prepared pursuant to the IEC 60456 standard.

INFORMATION!
For better washing effect, we recommend loading the drum to 2/3 when using the cotton programmes.

INFORMATION!
Low water temperature, low mains voltage and different washing loads may affect the washing time; the remaining time displayed is adjusted accordingly during the washing process.

Time optimization during the programme progress

In the early stage of the washing programme, the washing machine uses advanced technology to detect the amount of laundry. After load detection, the washing machine adjusts the programme duration.

Washing programs with steam

Adding steam during the last washing step loosens the laundry, slightly disinfects it, and eliminates some allergens. After using such a program, the laundry will be soft, supple, and fresh, and it will require less ironing.
The use of steam (press the position 8) also allows omitting or reducing the amount of conditioner. For a better steam effect on the laundry, we recommend half load.

AirDry function

(depending on the model)

AIRDRY is a function intended for drying the washing machine interior and dispenser without any laundry in the appliance. The purpose of drying is to reduce and prevent the conditions for occurrence of mould and development of microbes that cause unpleasant odours of the washed clothes.

We recommend running this function once per week. The drying procedure takes several hours but uses little electricity.
When the **AIR**DRY process is completed, water droplets may still be present in the appliance or parts thereof. This is completely normal. Efficiency of appliance interior drying depends on the relative humidity in the room, amount of humidity remaining from the most recent wash, amount of clothes in the most recent wash etc.

AIRDRY function can only be activated using the **Connect**Life app on your phone. (See chapter »WASHING PROCESS, STEP BY STEP (1–7)/Step 3: Remote control of wash using the app«.)

Remote control of wash using the app

INFORMATION!
See chapter WASHING PROCESS, STEP BY STEP (1–7) and observe steps 1 and 2.

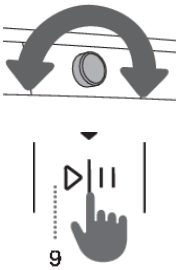

On the appliance:

1. Close the washing machine door and close the detergent compartment.
2. Rotate the program selector knob to position **Connect**Life/**REMOTE CONTROL** (Remote control)
3. Press the button (9) START/PAUSE. The appliance door will lock, and the **REMOTE START** (REMOTE START) remote control indicator will light up.

Remote control is available for the next 24 hours, even when the appliance enters standby mode. The door is locked during this time, so it cannot be opened. Remote control can be cancelled by pressing (9) START/PAUSE .

Continue operating the appliance in the **Connect**Life app, where you can choose from several options (selection, launch, and monitoring and stopping of the programme, amongst other additional settings)

INFORMATION!
The washing process can be controlled/monitored from the app.

INFORMATION!
Washing machine operation can be paused or stopped by choosing STOP/ADD CLOTHES/PAUSE ...

Some options can be implemented remotely in full, and some require your physical presence, such as adding laundry during a washing cycle (ADD CLOTHES).

INFORMATION!
You can also control your appliance from your phone if you are not connected to the same Wi-Fi network as your appliance (the phone only needs an active internet connection). This means you can also control your appliance when you are away from home.

INFORMATION!
You can operate the appliance with multiple devices. You can also control and monitor the operation of the appliance with any phone connected to the appliance, regardless of which user has initiated the washing cycle. The appliance can be connected to/controlled simultaneously with several **Connect**Life user accounts.

INFORMATION!
After you have started the appliance from your phone, a person located next to the appliance can take over and manually turn off or control the appliance; the app will notify you in such case. In such case, controlling the appliance remotely from your phone is no longer possible. If you wish to control the appliance from your phone again, all required steps must be repeated.

Step 4: Selecting extra functions

Settings using a single button press

Most programmes feature basic settings, but these settings can be changed.

Adjust the settings by pressing the relevant function button (before pressing the (9) START/PAUSE button). Functions that cannot be changed with the selected washing programme are partly lit (dimmed).

Certain settings cannot be selected with some programmes. Such settings will not be lit, and the button will flash when pressed (see FUNCTION TABLE).

Description of function indicators for selected washing programme:
- **lit** (Basic/preset setting);
- **dimmed** (Functions that can be adjusted) and
- **unlit** (Functions that cannot be selected).

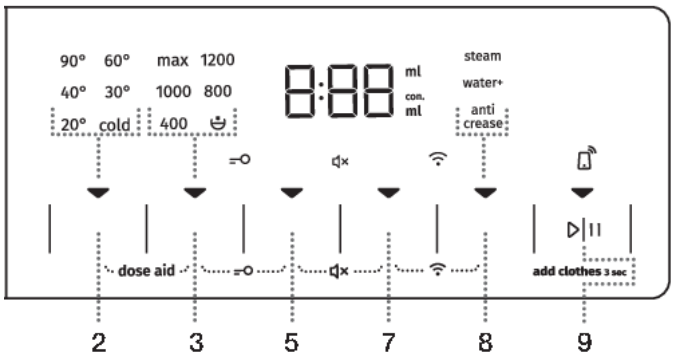

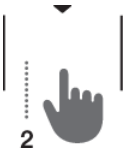

TEMP. (WASHING TEMPERATURE)

Changing the temperature for the selected program.

Each program has a preset temperature that can be changed by pressing the position (2) **TEMP.** (WASHING TEMPERATURE).

The selected temperature is lit.

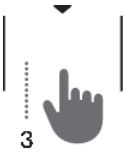

SPIN (SPINNING RATE/PUMP STOP/DRAIN)

To adjust the spinning rate. Every programme (except for Drum Clean (Self-cleaning programme)) has a preset spinning rate that can be adjusted by pressing on position (3) **SPIN** (SPINNING RATE/PUMP STOP/DRAIN)

If you select the Drain function without spinning, then no indicator (light) will be lit on the display unit. Washing time will be accordingly shorter.

If you select »Pump stop«, the symbol will appear on the display unit.

Select the »Pump stop« function when you wish the laundry to stay soaked in the water from the last rinse cycle in order to prevent it from creasing when you are unable to take it from the washing machine immediately after the washing programme is complete. You may set the desired spinning rate. To continue the program, press the (9) **START**/PAVZA button that is lit. Water will be drained (pumped out) and the final spin cycle will be run.

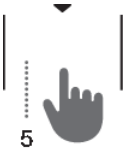

FAST (FAST)

When the **FAST** (FAST) function is activated, the washing programme will be carried out with a shorter washing duration. There are two available choices (depending on the selected washing programme).

If you choose the **FAST** (FAST) function, the function indicator (light) will turn from a partly lit to fully lit symbol, and the total programme time on the display unit will be adjusted accordingly.

To further shorten the washing programme, press the button (5) **FAST** (FAST) again.

If you press the button once again, the setting is reset back to default.

First press – **FAST** (FAST)
Second press – **SUPER FAST** (SUPER FAST)
Third press – **DEFAULT** (DEFAULT)

We recommend a half-load for the Cotton programme.

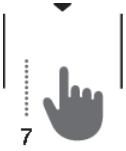

DELAY END (DELAY END)

Press on the position (7) **DELAY END** (DELAY END) to delay the programme completion time by up to 24 hours.

Settings procedure:

- Select the desired programme and extra functions.
- Press the position (7) **DELAY END** (DELAY END) to activate the function.
- Repeatedly press this position to set the desired programme completion time (with 30-minute increments up to 6 hours, and 1-hour increments thereafter, up to 24 hours.)
- To activate the function, press the (9) **START**/PAUSE button.

Washing machine starts counting down the set time. When the countdown reaches the programme duration (e.g. 2:30), the washing programme starts automatically.

To cancel or change the delayed end of the washing programme, rotate the program selector knob (1) to position **OFF** for at least two seconds.

To quickly cancel the programme completion delay, press the position (7) **DELAY END** (DELAY END) and hold it for 3 seconds. The washing programme will resume.

Example of function setting:

It is now 9 PM, and you wish the washing programme to be completed at 6 AM the next morning then set the **DELAY END** (DELAY END) time to 9 hours.

INFORMATION!
Some settings cannot be selected with certain programmes. Such functions will not be lit on the display unit, and when the corresponding button is pressed, an acoustic signal will be emitted and the light on the button will flash (see FUNCTION TABLE).

INFORMATION!
Activate/deactivate the functions by pressing the desired function (before pressing the (9) **START**/ PAUSE button). An indicator will light up next to the selected functions.

INFORMATION!
If you have set the **DELAY END** (DELAYING THE END OF THE WASHING PROGRAM) function and you are using liquid detergent, we do not recommend setting a programme without a pre-wash.

Settings using a combination of two buttons pressed simultaneously

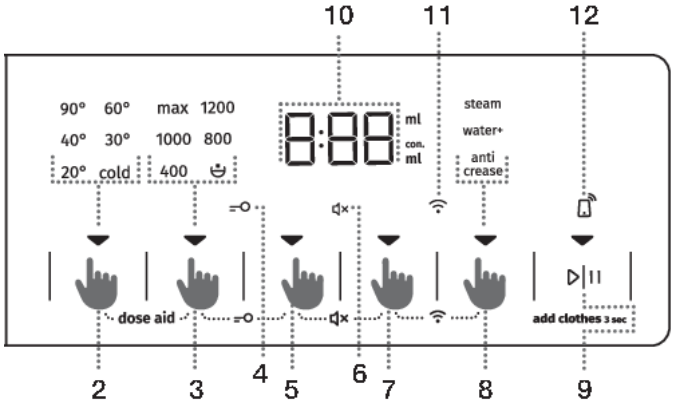



DOSE AID

With the **DOSE AID** function, the washing machine will recommend the optimum amount of powder or liquid detergent according to the selected settings.

Recommended amount of powder or liquid detergent depends on:

- **Water hardness** (the following settings are available: soft, medium, hard. Default setting is the medium level, but the user may adjust it. See chapter »INTERRUPTIONS AND CHANGING THE PROGRAMME/Personal settings menu).« For correct functioning of the **DOSE AID** function, we recommend setting the correct water hardness level.
- **Selected washing programme** and
- **Amount of laundry (load)** – the washing machine measures the laundry load every time you use the **DOSE AID** function.

In order for the **DOSE AID** feature to function correctly, the STEP 2 (preparing the laundry, switching on, and loading the washing machine) and STEP 3 (selecting the washing programme) have to be carried out first.

1. Activate the function by simultaneously pressing on positions(2) **TEMP.** (WASHING TEMPERATURE) in (3) **SPIN** (SPINNING RATE/PUMP STOP/DRAIN) and holding them for at least 3 seconds.
Countdown timer is displayed on the display unit.
Indicator (light) lights up when the function is activated.



2. Press the (9) **START**/PAUSE ▷|II button. The washing machine will start measuring the amount of laundry in the drum.

Measuring process is indicated with alternating flashing of the indicator lights on the display unit.



3. Based on the measured amount of laundry in the drum and other settings, the recommended amount of concentrated/nonconcentrated powder or liquid detergent will be displayed alternately on the display unit.



INFORMATION!
To determine whether your powder or liquid detergent is concentrated or not, check the packaging of your detergent.

INFORMATION!
To re-check the amount of concentrated or non-concentrated powder or liquid detergent, simultaneously press the (2) **TEMP.** (WASHING TEMPERATURE) and (3) **SPIN** (SPINNING RATE/PUMP STOP/DRAIN) buttons once again.

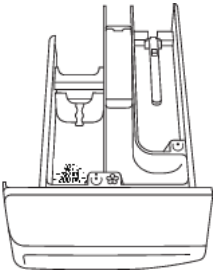

4. Add the recommended amount of powder or liquid detergent into the dosing tank. For guidance, observe the detergent amount/ level indication in the washing detergent compartment (see chapter »RECOMMENDATIONS FOR WASHING AND ECONOMIC USE YOUR WASHING MACHINE«).

To start the washing programme, press the (9) **START**/PAUSE ▷II button.

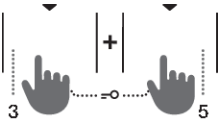

CHILD LOCK

To ensure safety. Turn it on by simultaneously pressing (3) **SPIN** (SPINNING RATE/PUMP STOP/DRAIN) and (5) **FAST** (FAST) for at least 3 seconds. The display will show the time countdown. The selection is confirmed by an acoustic signal and by the activation of the indicator lamp (the symbol will light up (4)). You can also deactivate the child lock using the same procedure. As long as the child lock is activated, you cannot change the programme, settings or additional functions.

Child lock remains active even after the washing machine is switched off. For safety reasons, the child lock does not prevent the washing machine from being switched off by turning the washing programme selector button (1) to the position **OFF** ⏻. If, when the child lock is activated, the button is turned to the position **OFF** ⏻, the washing programme goes into pause mode. You can resume the programme by changing the position of the button and pressing (9) **START**/PAUSE ▷II. To select a new programme, you need to turn off the child lock.

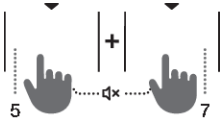

SOUND OFF

To turn off the sounds, simultaneously press the positions (5) **FAST** in (7) **DELAY END** and hold them for at least 3 seconds.

The selection will be confirmed by an acoustic signal and by an indicator light (the symbol (6) will be lit).

To turn the sound back on, hold (5) and (7) for at least 3 seconds. If you turn off the sound, there will be no acoustic warning at the end of the washing programme.



Wi-Fi MENU

The Wi-Fi menu is used for connecting the appliance and for remote control.

Rotate the programme selector knob (1) to any position, except position **OFF**.

For 3 seconds, simultaneously press the positions (7) **DELAY END** (DELAYING THE END OF THE WASHING PROGRAM) and (8) **EXTRAS** (EXTRA FUNCTIONS). You have now entered the setup menu for Wi-Fi.

You can take one step back by simultaneously pressing the positions (7) and (8) and holding them for 3 seconds.

By pressing (8) **EXTRAS** (EXTRA FUNCTIONS) you can select the available functions. By pressing (9) START/PAUSE, you confirm your selection.

Available settings:

- **OFF/On** OFF / On – turning appliance connectivity off or on.
- **Con** Con – the appliance is ready for connecting to a Wi-Fi network for 5 minutes.
- **PAr** PAr – the appliance can be connected to the **Connect**Life app for 3 minutes. The function will only be active if you have already connected the appliance to your Wi-Fi network.
- **UnP** UnP – Remove (unpair) all users.

INFORMATION!
When the washing machine is switched off, all extra functions return to their basic or custom settings, except for the acoustic signal setting.

Step 5: Selecting additional functions

INFORMATION!

Activate/deactivate the functions by pressing the desired function (before pressing the (9) START/PAUSE button).

Some settings cannot be selected with certain programmes. Such functions will not be lit on the display unit, and when the corresponding button is pressed, an acoustic signal will be emitted and the light on the button will flash (see FUNCTION TABLE). The functions (indicator lights below them) the are available will be dimly (partially) lit.

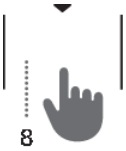

EXTRAS (EXTRA FUNCTIONS)

Press the (8) **EXTRAS** (EXTRA FUNCTIONS) button once or multiple times to choose between the eight different functions (depending on the selected washing programme):

- First press: **ANTI CREASE** (CREASE PREVENTION);
- Second press: **WATER+** (EXTRA WATER);
- Third press: **STEAM** (STEAM);
- Fourth to eighth press: different combinations of these three functions.



ANTI CREASE (CREASE PREVENTION)

To prevent creasing, select the **ANTI CREASE** (CREASE PREVENTION) function. Gentle tumbling will continue after the end of the washing programme.

This function is recommended for delicate laundry.

AC will appear on the display unit (10).

A function can be deactivated at any time by pressing the (9) **START**/PAUSE ▷|II button or by rotating the program selector knob to position **OFF** ⏻.

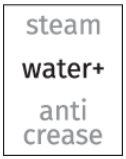

WATER+ (EXTRA WATER)

Use this function to wash with a larger amount of water on some programmes.

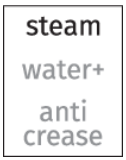

STEAM (STEAM)

Adding a 20-minute steam cycle at the end of the program will soften and disinfect your garments, and reduce or do away with the need for ironing and using softener/conditioner for your laundry.

Extra function table

Programmes		FAST	SUPER FAST	DELAY END	DOSE AID	PREWASH *	ANTI CREASE	WATER+	STEAM	SPIN	RINSE&HOLD
	**Cotton white** **(Cotton white)** 40°C–90°C	•	•	•	•	•	•	•	•	•	•
	**Colour** **(Colour)** cold–60°C	•	•	•	•	•	•	•		•	•
	**Mix|Synthetics** **(Mixed laundry/Synthetics)** cold–60°C	•	•	•	•	•	•	•		•	•
	**Wool&Hand** **(Wool&Hand)** cold–40°C	•	•	•	•		•			•	•
	**Eco 40-60**			•	•					•	•
	**Power 59´|32´** 40°C	•		•	•	•	•	•		•	•
	**Speed 20´** **(Speed 20´)** 30°C			•	•		•			•	•
	Drum clean **(Self-cleaning programme)**			•					•		
	**Spin|Drain** **(Spinning rate | Drain)** **(Partial programme)**			•						•	
	**Rinse&Softening** **(Rinse&Softening)** **(Partial programme)**			•			•	•		•	•
	**Baby** **(Baby clothes)** 40°C–90°C	•	•	•	•	•	•	•	•	•	•
	**Shirts** **(Shirts with steam)** cold–40°C	•	•	•	•	•	•	•	•	•	•

Programmes		FAST	SUPER FAST	DELAY END	DOSE AID	PREWASH *	ANTI CREASE	WATER+	STEAM	SPIN	RINSE&HOLD
17	**Sports (Sportswear)** cold–40°C	•	•	•	•	•	•	•		•	•
	Extra hygiene 40°C–90°C	•	•	•	•	•	•	•	•	•	•

•Additional functions can be used

* **PREWASH** function can only be activated using the **Connect**Life app on your phone. (See chapter »WASHING PROCESS, STEP BY STEP (1–7)/Step 3: Remote control of wash using the app«.)

Step 6: Starting the washing programme



Press the (9) **START**/PAUSE button.

TIME REMAINING TO PROGRAMME COMPLETION or **DELAY END** time (if set) will appear on the display.

Symbols will be lit on the selected functions.

After pressing the (9) **START**/PAUSE button, the spinning rate (except in the case of the Drum clean (Self-cleaning programme) and **SPIN** (SPINNING RATE/PUMP STOP/DRAIN)), the Child lock and the Sound off functions can be adjusted/changed, while other settings cannot be changed.

INFORMATION!
If the **TIME REMAINING UNTIL PROGRAMME COMPLETION** flashes three times on the display unit, and there is an audible signal, this means that the washing machine door is open or not closed tightly. Close the washing machine door and press the (9) button **START**/PAUSE again to resume the washing programme.

Step 7: End of the washing programme



The washing machine will indicate the end of the washing programme with an acoustic signal and End will appear on the display until the washing machine switches into low standby mode or switches off. After 5 minutes, the End sign will no longer be displayed.

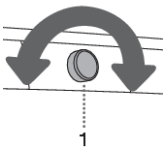

1. Open the washing machine door.
2. Take the laundry from the drum.
3. Wipe the rubber door gasket and the door glass.
4. Close the door!
5. Shut off the water supply tap.
6. Switch off the washing machine (rotate the program selector knob (1) to the **OFF** ⏻ position.
7. Unplug the power cord from the outlet.

INTERRUPTIONS AND CHANGING THE PROGRAMME

Manual interruption

To stop and cancel a washing programme, rotate the program selector knob (1) to the **OFF** ⏻ position. Signal lights will flash on the display. At the same time, the washing machine pumps the water out of the washing machine drum. When the water is pumped out, washing machine door will be unlocked. If the water in the washing machine is hot, the washing machine will automatically cool it and pump/drain it out.

Personal settings

Basic or default settings for each washing programme can also be changed. When you select the washing programme and Additional functions, the combination can be stored by pressing the ((9) **START**/PAUSE button and holding it for 5 seconds (the time is counted down on the display unit). The sign **»SAVED«** (»saved«) will appear on the display.

The programme will remain stored until it is changed using the same procedure.

Personal settings can also be reset to factory settings in the user menu.

AdaptTech

When a washing programme setting is used three times in a row, this setting is stored as default and will always be suggested when you select that washing programme – this is called the **ADAPT**TECH function. If you manually store the settings of a washing programme, the **ADAPT**TECH function on this washing programme is deactivated.

Personal settings menu

To turn on the washing machine, rotate the program selector knob (1) to any position. Simultaneously press the (2) **TEMP.** (WASHING TEMPERATURE) and (5) **FAST** (FAST) positions to open the Personal Settings Menu. The lights in the upper row of the display unit will light up, and number 1 will appear to indicate the setting function. Rotate the program selector knob (1) to the left or to the right to choose the function to change. Number 1 indicates sound settings, 2 indicates Water hardness setting DOSE AID), and number 3 indicates resetting of Personal programme settings to factory defaults. If the desired settings are not selected in 20 seconds, the programme will automatically return to main menu.

Press the (3) **SPIN** (SPINNING RATE/PUMP STOP/DRAIN) position to confirm the desired functions and their settings; press the (2) **TEMP.** (WASHING TEMPERATURE) position to go back one step.

Acoustic signal volume can be set at four levels (0 means the sound is off; 1 means that the button sound is activated; 2 means low volume, and 3 means high volume). Choose the volume level by rotating the program selector knob (1) to the left or to the right. The lowest setting means that the acoustic signal is switched off.

Pause button

The washing programme can always be stopped by pressing the (9) START/**PAUSE** button. The washing programme is **temporarily paused** when the time remaining until programme completion is flashing on the display unit. If there is no water in the drum and water temperature is not too high, then the door will unlock after a certain period of time, and they can be opened. To resume the washing program, first close the door and then press the key (9) **START**/PAUSE button.

Adding/removing laundry during washing machine operation

After a certain period of time, the washing machine door can be opened if the water level and temperature are below a predefined threshold.

If the conditions below are met, then the electronic door lock is released and the washing machine door can be opened; Add will appear on the display unit:

- water temperature in the drum has to be suitable,
- water level in the drum has to be below a certain value.

In order to add or remove laundry from the washing machine during programme operation, proceed as follows:

1. Press the (9) START/**PAUSE** button and hold it for 3 seconds.
2. If all conditions for release of electronic door lock are met, then you can open the washing machine door and add or remove laundry from the drum.
3. Close the washing machine door!
4. Press the button (9) **START**/PAUSE

The washing program will resume.

INFORMATION!
If you add a considerable amount of laundry during the wash, the laundry could be washed less effectively, since the washing machine initially sensed a lower weight of the load of laundry and added a smaller amount of water. Insufficient amount of water relative to the amount of laundry could also cause damage to the laundry (rubbing of dry laundry), and washing time can be longer.

INFORMATION!
Washing time will resume from the point at which the washing programme was interrupted.

Errors

In case of an error or fault, the programme will be interrupted.

An acoustic signal will warn about such occurrence (see TROUBLESHOOTING AND ERROR TABLE), and the error will be indicated on the display unit (E:XX).

Power supply failure

In case of a power supply failure, the washing programme is interrupted. When power supply is restored, the washing programme is resumed from the point at which it was interrupted. Upon completion of the washing cycle, End/ PF will alternate on the display unit. This informs the user about a power supply failure and on the effect on the execution of the washing programme.

Washing time will resume from the point at which the washing programme was interrupted.

Opening the door (pause/cancel/change programme)

Washing machine door can be opened, if the water level in the machine is low enough and if the water temperature is not excessively high.

INFORMATION!

If the washing machine is not connected to the power mains or in case of a power supply failure during the programme execution, then the washing machine door cannot be opened. In such case, the washing machine has to be properly connected, or a service technician should be contacted.

Displaying the number of completed wash cycles

(depending on the model)

If you disconnect the appliance from the power supply, wait for 10 seconds, and then reconnect the power cord, information on the number of completed wash cycles is displayed on the display unit for 3 seconds. After 3 seconds, the appliance switches to standby mode.

CLEANING AND MAINTENANCE

ELECTRIC SHOCK!
Before cleaning, unplug the washing machine from the power mains.

Cleaning the dispenser tray

INFORMATION!
The dispenser tray should be cleaned at least twice per month.

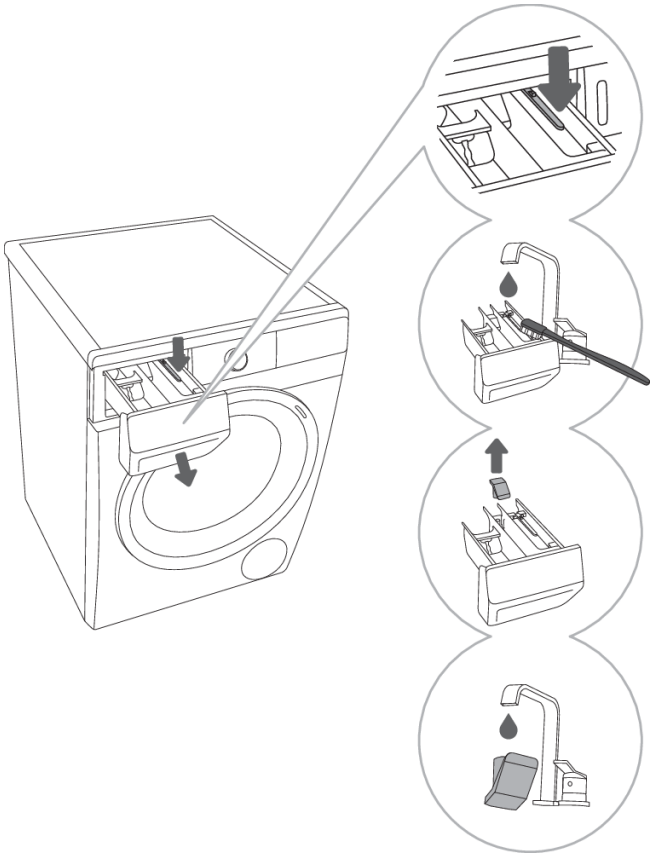

1 To remove the dispenser tray from the housing, press the small tab.

2 Clean the dispenser tray under running water using a brush, and dry it. Also, remove any detergent residue from the bottom of the housing.

3 If required, remove and clean the plug cap.

4 Clean the plug cap under running water and replace it.

INFORMATION!
Do not wash the detergent compartment in the dishwasher!

Cleaning the water supply hose, detergent dispenser housing, and rubber door gasket

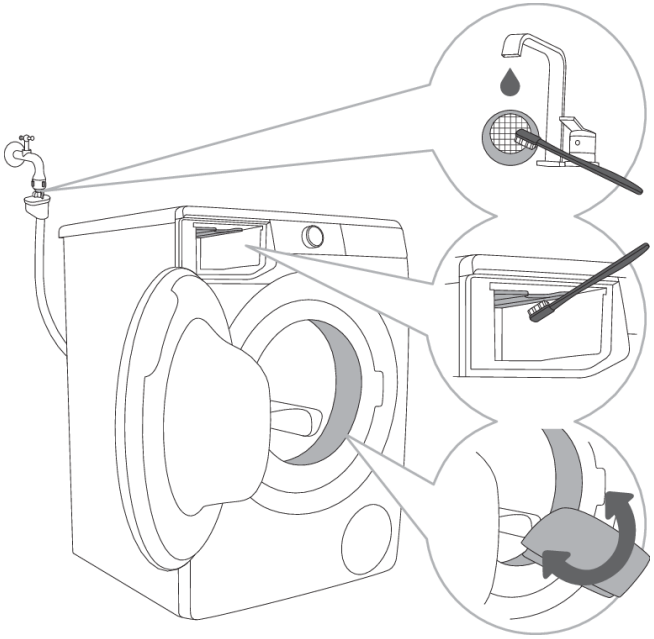

1 Clean the net filter often under running water.

2 Use a brush to clean the entire washing machine rinsing section, especially the nozzles on the upper side of the rinsing chamber.

3 After every wash, wipe the rubber door gasket and remove any objects that may have become stuck in the gasket to extend its useful life.

Cleaning the pump filter

INFORMATION!

During cleaning, some water may be spilled. It is therefore recommended to place an absorbent cloth on the floor.

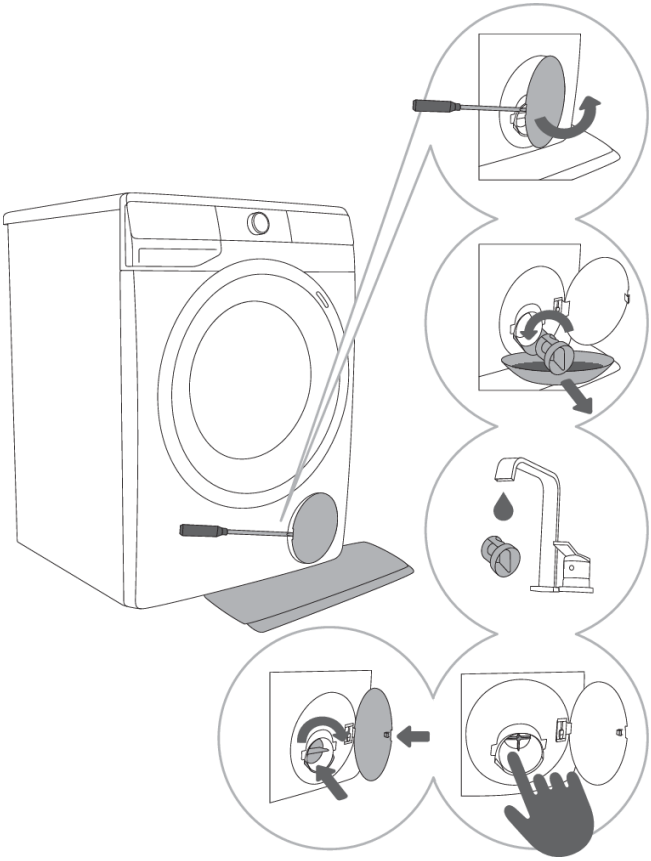

1 Open the pump filter cap using a suitable tool (flat screwdriver or a similar tool).

2 Pull out the water outlet funnel before cleaning the pump filter.
Rotate the pump filter slowly in the counter-clockwise direction. Pull out and remove the pump filter to allow the water to slowly drain.

3 Clean the pump filter thoroughly under running water.

4,5 Remove all objects and impurities from the filter housing and the impeller. Replace the pump filter as shown in the figure and fasten it by rotating in the clockwise direction.
For a good seal, the filter gasket surface should be clean.

INFORMATION!

We recommend regular cleaning of the pump filter once a month. When washing very fleecy, very dirty or old laundry, do it more often.

Cleaning the washing machine exterior

ELECTRIC SHOCK!
Always disconnect the washing machine from the power mains before cleaning.

Clean the washing machine exterior and display unit using a soft damp cotton cloth and water.

WARNING!
Do not use any solvents or cleaning agents that could damage the washing machine (please observe the recommendations and warnings provided by the cleaning agent manufacturers).

INFORMATION!
Do not clean the washing machine with a jet of water!

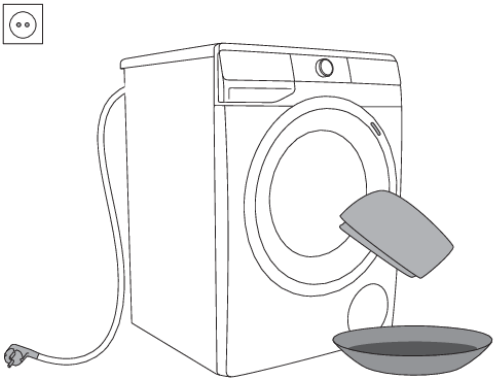

TROUBLE-SHOOTING

What to do ...?

The washing machine shall automatically control the operation of particular functions during the washing cycle. If any irregularity is identified, this will be indicated by reporting (E:XX) on the display. The washing machine will report the error until it is switched off. Disturbances from the environment (e.g. the power grid) may result in various error reports (see TROUBLESHOOTING TABLE).

In such case:

- Switch off the washing machine and wait for a few seconds.
- Switch on the washing machine and repeat the washing programme.
- Most errors during operation can be resolved by the user (see TROUBLESHOOTING TABLE).
- If the error occurs again, call an authorized service unit.
- Repairs may only be carried out by an adequately trained person.

The following lists all the errors that the user can see on the user interface.

Troubleshooting and error table

Errors indicated on the display unit may include the following:

Problem/ Error	Indication on the display unit and problem description	What to do?
	**Incorrect settings**	Restart the program; if the error reoccurs, call a service technician.
	**Temperature sensor error**	Inlet water too cold. Repeat the washing program. If the washing machine reports this error again, call a service technician.
	**Door lock error**	Make sure the washing machine door is closed. If you hear an acoustic signal after pressing the (9) **START**/PAUSE button, it means that the door of the washing machine is not closed. Close the washing machine door. Unplug the power cord from the outlet; then, plug the power cord back into the outlet and switch on the washing machine. If the error reoccurs call a service technician.

Problem/ Error	Indication on the display unit and problem description	What to do?
	**Water filling error**	Check the following: • is the water inlet valve open, • is the filter on the water inlet hose clean, • is the water supply hose deformed (clipped, clogged etc.), • is the pressure in the water mains between 0.05 and 0.8 MPa (0.5–8 bar) Then, press the (9) **START**/PAUSE button to resume the programme. If the error reoccurs call a service technician.
	**Water heating error**	Restart the program; if the error reoccurs, call a service technician.
	**Water draining error**	Check the following: • is the pump filter clean, • is the drain hose clogged, • is the drain clogged, • if the discharge hose placed is placed below the maximum and above the minimum height (see chapter »INSTALLATION AND CONNECTION/ Connecting and securing the water discharge hose«); press the (9) **START**/PAUSE button again. If the error reoccurs call a service technician.
	Excessive amount of detergent	Too much detergent may cause excessive foaming in the drum. See description for Fd
	**Water leak detected in the washing machine area**	Turn off the washing machine and turn it back on. Inspect the exterior of the appliance. If you do not observe any leaks, you can continue to use the washing machine.
	**Water level sensor error**	Unplug the power cord from the outlet; then, plug the power cord back into the outlet and switch on the washing machine. Vent the appliance. Do this by draining and cleaning the washing machine filter and cleaning the wall-mounted trap. If the error reoccurs call a service technician.

Problem/ Error	Indication on the display unit and problem description	What to do?
	**Water overflow**	If there is water in the drum that exceeds a certain level, and an error is reported on the display unit, the washing program will be interrupted and water will be pumped out of the washing machine. Restart the program; if the error reoccurs, call a service technician. If there is water in the drum that exceeds a certain level, and an error is reported on the display unit, while the washing machine continues to add water, close the water tap and call a service technician.
	Excessive amount of detergent	Too much detergent may cause excessive foaming in the drum. See description for Fd.
	**Motor control error**	Manually redistribute the laundry (stuck or tangled laundry) and repeat the washing programme.
	**Error while locking the door**	Door is closed, but it cannot be locked. Switch off the washing machine. Switch it back on and restart the washing program. If the error reoccurs call a service technician.
 	**Error while unlocking the door**	Door is closed, but it cannot be unlocked. Turn off the washing machine, then turn it back on. If the error reoccurs, call a service technician. To open the door, see chapter »INTERRUPTIONS AND CHANGING THE PROGRAMME/Opening the door (Pause/Cancel/Change Programme)«.
 	**Electronics communication failure in the washing machine**	Unplug the power cord from the outlet; then, plug the power cord back into the outlet and switch on the washing machine. If the error reoccurs call a service technician.
	**Warning from the system for detecting extended washing machine voltage fluctuation – 180 V > U > 260 V**	A prolonged drop of voltage do below 180 V, or voltage in excess of 260 V was detected, which can affect the washing machine operation. Check the power supply network to which your washing machine is connected.
	**Warning from the system for detecting incorrect power mains frequency (50/60 Hz)**	When the washing machine was switched on, the system detected incorrect supply power frequency, which could affect washing machine functionality. Any problems on the power network should be checked and corrected.

Problem/ Error	Indication on the display unit and problem description	What to do?
	**Appliance cannot be connected to the network.**	The error only affects the option to remotely control (Remote control) your washing programme. it does not affect the washing process on other programmes. Call a service technician.

Warnings/information for the user, which can be indicated on the display unit, may include the following:

Warning/ Information	Indication on the display unit	Error cause and description, what to do?
	**ANTI CREASE** (CREASE PREVENTION) **function that you have selected as a part of the washing programme is activated and in progress**	To cancel or stop the **ANTI CREASE** (CREASE PREVENTION) function, rotate the program selector knob (1) to position **OFF** ⏻.
	**Water drain system alert** Display of warning CLF.	Alert about reduced water flow in the pumping stage. Check the following: • is the pump filter clean, • is the drain hose clogged, • is the drain clogged, • if the discharge hose placed is placed below the maximum and above the minimum height (see chapter »INSTALLATION AND CONNECTION/Connecting and securing the water discharge hose«).
	**System warning to run the Drum clean (Self-cleaning programme)** After the washing programme is complete, the signs CLn and End will alternate on the display unit.	In case of a CLn warning on the display after washing, proceed as follows: • clean the dosing container, • clean the water supply hose, detergent dispenser, and rubber door gasket, • clean the pump filter (see chapter »CLEANING AND MAINTENANCE«) and • run the self-cleaning programme Drum clean (see chapter »WASHING STEPS (1–7)/3. Step: Programme table«). Self-cleaning programme is used to clean the drum and to remove detergent residues and bacteria. The drum must be empty. Do not add detergent or softener! You can add some spirit vinegar (approx. 2 dl) or sodium bicarbonate (1 tablespoon or 15 g) for effective descaling. We recommend that you use the programme at least once a month or whenever the warning appears CLn.

Warning/ Information	Indication on the display unit	Error cause and description, what to do?
	**Warning by the system for detecting excessive foaming during the washing programme**	In case of excessive foaming in the washing machine or leak of foam through the detergent dispenser tray, the washed laundry has to be rinsed thoroughly with a large amount of water. Choose a washing programme, but do not add any detergent. • We recommend choosing the Rinse&Softening programme. • Decrease the amount of detergent added.
	**Power supply failure warning (»PF«/Power Failure)**	The system detected a power supply failure during the washing programme progress, which affected functional execution of the washing programme. Check the power supply network to which your washing machine is connected.
 	**Power supply failure warning (»PF/End«)**	Upon completion of the washing cycle, End and PF will alternate on the display unit. This informs the user about a power supply failure and on the effect on the execution of the washing programme. The washing program continues where it was interrupted and then ends successfully.
	**Warning – U:Lo (voltage below 180 V)**	A prolonged drop of voltage to below 180 V was detected, which can affect the washing machine operation. Check the power supply network to which your washing machine is connected.
	Unresponsive display unit and all buttons	Unplug the power cord from the outlet. Check if the supply voltage is suitable for the washing machine (220–240 V); then, plug the power cord back into the outlet and switch on the washing machine.
	**Warning – U:Hi (voltage over 260 V)**	A prolonged voltage surge to over 260 V was detected, which can affect the washing machine operation. Check the power supply network to which your washing machine is connected.
	**Washing machine standing by, ready to resume the washing programme** The time remaining until programme completion is alternately lit and off on the display unit.	To resume the washing programme, press the button (9) **START**/PAUSE.

Warning/ Information	Indication on the display unit	Error cause and description, what to do?
	**Preparation for unlocking the door** Signal lights will flash on the display unit.	Wait for the process to finish. If no errors are shown after the process, a new cycle can be run. Water has to be drained. Wait for the door to unlock.
	The appliance cannot be controlled remotely	Appliance remote control is not activated or enabled. Check if the Wi-Fi symbol on the appliance is lit, and set the program selector knob (1) to position **REMOTE CONTROL** (**Connect**Life) (Remote control) .
	The appliance will not connect to the Wi-Fi network	The appliance cannot find your Wi-Fi network. Check whether 2.4 GHz network is activated on your router and whether the Wi-Fi signal at the appliance is strong enough.

INFORMATION!

Noise and vibration – make sure the appliance is levelled using the adjustable legs and that the jam nuts are securely tightened.

Unevenly distributed laundry or lumps of laundry in the washing machine drum can cause problems such as vibration and noisy operation. The washing machine detects such problems and the UKS* (*stability control system) will be activated.
Smaller loads (e.g. one towel, one sweater, one bathrobe etc.) or clothes made of materials with special geometrical properties are virtually impossible to distribute evenly across the washing machine drum (slippers, large items etc.). This results in several attempts to redistribute the laundry, which in turn leads to longer programme duration. In extreme cases of unfavourable conditions, the programme can be completed without the spinning cycle.
The UKS* (*stability control system) allows stable operation and a longer washing machine useful life.

If the problems persist despite observing the advice above, call an authorized service technician.

Service

Before calling a service center

When you contact a service centre, please state your washing machine's type (1), code/ID (2), model number (3), and serial number (4).

Washing machine type, code, model, and serial number can be found on the rating (type) plate on the inner side of the washing machine door.

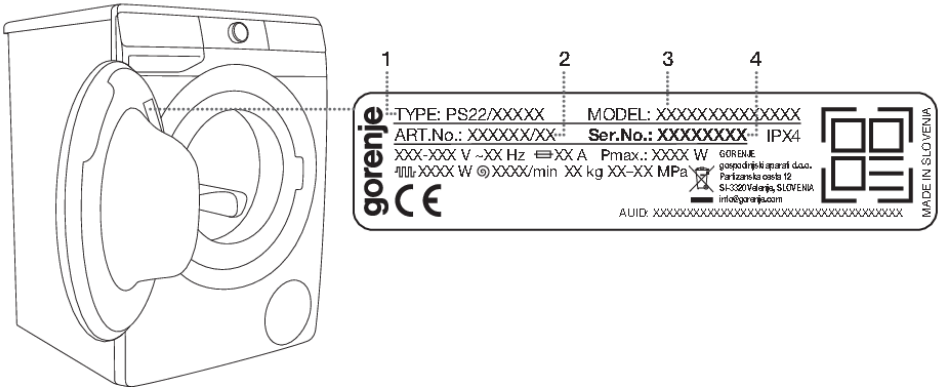

WARNING!
In case of a failure, only use approved spare parts by authorized manufacturers.

WARNING!
Repair or any warranty claim resulting from incorrect connection or use of the washing machine shall not be covered by the warranty. In such cases, the costs of repair shall be charged to the user.

INFORMATION!
The warranty does not cover consumables, minor deviations in colour, increased noise that results from appliance age and which does not affect the functionality of the appliance, and aesthetic defects on components, which do not affect the functionality and safety of the appliance.

The warranty does not cover the errors or failures resulting from disturbances from the environment (lightning strike, power grid failures, natural disasters etc.).

INFORMATION!
Report any malfunction to your local call centre or web address; all information can be found in the enclosed warranty statement. Contact details of your authorised service centre are available in the warranty statement supplied with the appliance and on the website by scanning the QR code on the rating plate.

INFORMATION!
Some simple faults described in the chapter »TROUBLESHOOTING/Troubleshooting and error table« can be fixed by the user himself by taking into account the instructions without risk to their own safety and without affecting the warranty conditions.

INFORMATION!

Functional spare parts for the washing machine you purchased will be available for 10 years. During this time, original spare parts will be available to ensure the correct operation of your appliance.

A list of spare parts and repair tips in accordance with the current Ecodesign Directive can be found by scanning the QR code located on the inside of the door of the washing machine. Or on the following link: https://auid.connectlife.io.

RECOMMENDATIONS FOR WASHING AND ECONOMIC USE YOUR WASHING MACHINE

Wash new coloured garments separately the first time.

Wash heavily soiled laundry in smaller amounts, with more powder detergent or with a pre-wash cycle.

With slightly soiled laundry, we recommend a programme without a pre-wash cycle, use of shorter programmes (e.g. FAST) and a lower washing temperature.

Apply a special stain remover on stubborn stains before the wash.

Use of chlorine-based bleaches is not recommended as they can damage the heater.

If you wash at low temperatures and/or with liquid detergents, there is a risk of developing microorganisms and an unpleasant odour in the washing machine. Leave the washing machine door open after each wash to allow the appliance to dry. If you detect an unpleasant odour, run the Drum clean programme.

To prevent and remove limescale deposits only use agents with added anti-corrosion protection. Observe the cleaning agent manufacturer's instructions. To remove limescale deposits, we recommend starting the DRUM CLEAN programme. Add spirit vinegar (2 dl).

We recommend avoiding washing very small amounts of laundry as this will lead to excessive use of energy and poorer washing machine performance.
You can save energy and water by filling up the washing machine to the capacity specified by the manufacturer for each programme.

INFORMATION!
The following information is accessible via the QR AUID code on the rating plate (see chapter »WASHING MACHINE DESCRIPTION/Technical data«):

- rated capacity in kg;
- duration of the programme in hours and minutes;
- energy consumption in kWh per cycle;
- water consumption;
- maximum temperature reached in the washing machine drum;
- residual moisture content after washing cycle and spinning rate.

At higher spinning rates, there will be less residual moisture in the laundry. As a result, drying in a tumble dryer will be more economical and faster.

Loosen any folded laundry before putting it into the drum.

If water hardness exceeds 14°dH, water softener should be used. Heater damage resulting from incorrect use of water softeners shall not be covered by the warranty. Check the information on water hardness with your local water supply company or authority.

Detergent compartment

Do not add hardened lumps of powder detergent into the detergent dispenser as this may clog the piping in the washing machine.

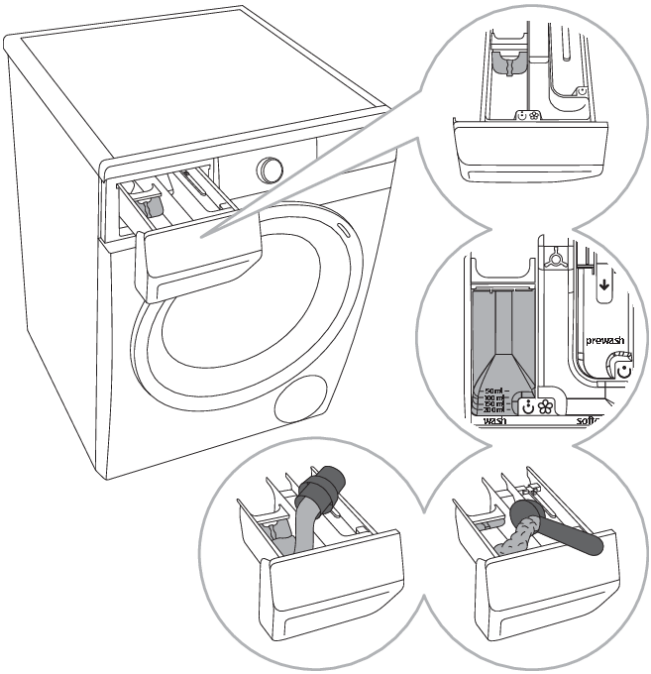

1 A separator/divider tab is supplied with the washing machine, which allows adding liquid detergent to the main wash compartment (left compartment).

2 Powder and liquid detergent level indicator

3 When using powder detergent, the separator/divider tab should be lifted.

4 When using liquid detergent, the separator/divider tab should be lowered.

Symbols of detergent dispenser compartments	
	prewash
	main wash
	softening

Detergents

INFORMATION!
Detergents carrying the environment protection label are less harmful to the environment.

Only add the detergents in compliance with the recommendations by detergent manufacturers. Recommended amount of washing detergent at certain loads and water hardness levels are specified on the detergent packaging.

To correctly dose detergents, especially liquid ones, use the accessories provided by the detergent manufacturer.

INFORMATION!
We recommend adding powder detergent immediately before the washing cycle. If you add it sooner, make sure the detergent compartment in the dispenser tray is completely dry before adding the powder detergent: otherwise, the powder detergent may cake before the start of the washing process.

Suitable detergents

Only use detergents for machine washing.

When using thick liquid laundry care products, we recommend diluting them with water to prevent clogging the dispenser tray drain.
Liquid detergents are intended for washing programmes without a prewash cycle.

See chapter »WASHING PROCESS, STEP BY STEP (1–7)/3. Step: Recommendations for detergents under Regulation (EU) No. 1015/2010«.

You can use all modern detergents intended for household washing machines. The detergent packaging contains instructions for use and dosing, which apply to the maximum amount of filling.

The detergent dosage depends on:

- how heavily soiled the laundry is;
- the amount of laundry and
- water hardness.

Water hardness	Hardness levels			
	°dH (°N)	m mol/l	°fH (°F)	p.p.m.
1 – soft	< 8,4	< 1,5	< 15	< 150
2 – normal	8,4–14	1,5–2,5	15–25	150–250
3 – hard	> 14	> 2,5	> 25	> 250

INFORMATION!
Check the information on water hardness with your local water supply company or authority.

Dosing accessories

To correctly dose detergents, especially liquid ones, use the accessories provided by the detergent manufacturer.

Softeners

INFORMATION!
Pour the conditioner into the dispenser tray, into the compartment with the symbol ❀. Observe the recommendation on the conditioner packaging.

INFORMATION!
Do not fill the conditioner compartment over the max. indication (maximum indicated level). Otherwise, the conditioner will be added to the laundry too soon, leading to poorer washing effect.

Stain removal tips

Before using special-purpose stain removers, try using the natural methods that do not harm the environment on less stubborn stains.

However, prompt action is required! Soak the stain with an absorbent sponge or a paper towel; then, rinse with cold (lukewarm) water – but never with hot water!

When using bleaches or stain removal agents, there is danger of rust (corrosion) and discolouration.

⚠ **WARNING!**
To protect the environment, we advise against using powerful chemicals.

Stains	Stain removal
Mud	When the stain is dry, first scrape it off the garment before washing it in the washing machine. If the stain is stubborn, soak it with an enzyme-based stain remover before the wash. If the stain is not stubborn, wash the laundry with liquid detergent or powder detergent and water before the wash.
Antiperspirant	Before washing in the washing machine, apply liquid detergent onto the laundry. Apply stain removers on any stubborn stains. Alternatively, use oxygen-based bleach for the wash.
Tea	Soak or rinse the laundry in cold water and add stain remover if necessary.
Chocolate	Soak or rinse the laundry with lukewarm soapy water. Then, apply lemon juice and rinse.
Ink	Before washing in the washing machine, apply stain removers on the stain. You may also use denatured alcohol. Turn the garment inside out and place a paper towel under the stain. Use the alcohol on the back side of the stain. At the end of the pro-cess, thoroughly rinse the garment.
Felt tip pens	Dilute some starch in water and apply it to the stain. When it dries, scrape it off with a brush; then, wash the garment in the washing machine.
Baby food (urine, mud, food stains)	Before washing in the washing machine, soak the stains in lukewarm water for at least half an hour. For easier stain re-moval, add an enzyme-based stain remover.
Grass	Before washing in the washing machine, soak the laundry in an enzyme-based stain remover. Grass stains can also be re-moved by soaking (for approx. 1 hour) in diluted lemon juice or distilled vinegar.
Eggs	Soak the garment in an enzyme-based stain remover. Soak in cold water for at least 30 minutes or a few hours if the stains are stubborn. Then, wash in the washing machine.
Coffee	Soak the garment in salt water. If the stain is not fresh, soak it with a mixture of glycerine, ammonia and alcohol.
Shoe polish	Apply cooking oil to the stain and rinse.
Blood	Fresh stain – rinse the garment with cool water and wash it in the washing machine. Dried stain – soak the garment in an enzyme-based stain remover. Then, wash in the washing machine. If the stain does not vanish, try to remove it with a bleach suitable for your garment.

Stains	Stain removal
Glue, chewing gum	Place the garment in a bag and put it in the freezer until the stain hardens. Then, remove it with a blunt knife. Then, dilute the stain with a prewash stain remover and rinse thoroughly. Then, wash the laundry as usual.
Makeup	Use a stain remover for the prewash; then, wash in the washing machine.
Butter	Before washing in the washing machine, apply stain remover to the stain. Then, rinse with hot water (as hot as the fabric will al-low).
Milk	Soak the garment in an enzyme-based stain remover. Soak for at least 30 minutes or a few hours if the stains are stubborn. Then, wash in the washing machine.
Fruit juice	Apply a mixture of salt and water on the stain. Leave to take effect for a while, then rinse. You can apply sodium bicarbonate, distilled vinegar or lemon juice on the stain before washing in the washing machine. For old stains, use glycerine. After 20 minutes, rinse with cold water, then wash the laundry in the washing machine.
Wine	Soak the laundry in cold water for at least 30 minutes. Also, use a stain remover. Then, wash in the washing machine.
Wax	Put the garment into the freezer until the wax hardens. Then, scrape it off. Remove the remaining wax by placing a paper towel onto the stain, and then heat it with an iron until the paper absorbs the wax.
Sweat	Before washing in the washing machine, rub liquid detergent thoroughly into the stain.

Low standby mode

If you do not run any program or choose any settings after switching on the washing machine (program selector knob (1)), the display unit will be switched off after 5 minutes and switched to stand-by mode in order to save energy.

The display unit can be reactivated by rotating the program selector knob (1). If you do not do anything for 5 minutes after the end of a programme, the display unit will be switched off to save power.

P o = weighted power when off [W]	< 0,5
P l = weighted power when in standby [W]	< 0,5
T l = standby time [min]	5,00

INFORMATION!
Appliance with a wireless connection uses less than 2 W of electric energy in standby mode.

TYPICAL CONSUMPTION TABLE

(depending on the model)

INFORMATION!

The provided information is in accordance with EU Regulation 2019/2023. The values indicated for programmes other than Eco 40-60 have been determined in accordance with the applicable standard EN60456.

Explanation of symbols used below:

Rated capacity (kg)	Maximum temperature (°C) 5 min (1)
Programme duration (h:min) (1)	Remaining moisture content (%) (1)
Energy consumption (kWh per cycle) (1)	Spin speed (rpm) (1)
Water consumption (L per cycle) (1)	Energy efficiency class

i *the eco 40-60 programme at the rated capacity, half of the rated capacity and a quarter of the rated capacity;*
ii *the 20 °C programme at the rated capacity for this programme;*
iii *one cotton programme at nominal temperature higher than or equal to 60 °C (if present) at the rated capacity for this programme;*
iv *one programme for other textiles than cotton or a mix of textiles (if present) at the rated capacity for this programme;*
v *one programme for the quick washing of lightly soiled laundry (if present) at the rated capacity for this programme;*
vi *one programme for heavily soiled textiles (if present) at the rated capacity for this programme;*
(1) *Due to the influence of water pressure, hardness, and inlet temperature, the type, quantity, and soiling of the laundry, the detergent used, power supply, and selected functions, the actual values may differ from the specified values.*
(2) *Test program with cold water (15°C) in accordance with the EU Directive on Eco-design and the EU Regulation on Energy Labeling.*
(3) *Washing machine type, code, model, and serial number can be found on the rating (type) plate on the inner side of the washing machine door.*
FL *Full load (Full Load)*

49 cm / JET / 8 kg:

	Program								
i	**Eco 40-60** (2)	8,0	03:37	0,860	60	35	53	1400	A
		4,0	02:42	0,250	45	24			
		2,5	02:31	0,220	35	21			
ii	**Colour 20°C (Colour)**	FL	02:32	0,182	72	20	55	1400	
iii	**Cotton white 60°C (Cotton white)**	FL	03:06	1,850	81	60	55	1400	
iv	**Mix 40°C (Mixed laundry/Synthetics)**	3,5	02:41	0,737	66	41	40	1200	

49 cm / JET / 8 kg:

	Program								
v	**Speed 20´** (Speed 20′)	2,5	00:20	0,110	35	30	60	1200	
vi	**Cotton white 60°C + water plus (& water+)**	FL	03:06	2,032	85	60	55	1400	

(3) Data applies to:
[PS22/57141] [PS22/57143] [PS22/57145] [PS22/57147] [PS22/57148] [PS22/57149] [PS22/5714A] [PS22/5714B] [PS22/5714D]

54cm / 8 kg:

	Program								
i	**Eco 40-60** (2)	8,0	03:27	0,650	60	25	53	1400	A-20
		4,0	02:25	0,180	35	22			
		2,5	01:36	0,130	24	20			
		8,0	03:39	0,700	55	34	53	1400	A
		4,0	02:46	0,240	40	22			
		2,5	02:46	0,220	30	20			
ii	**Colour 20°C (Colour)**	FL	02:32	0,212	85	20	55	1400	
iii	**Cotton white 60°C (Cotton white)**	FL	03:06	2,038	100	60	55	1400	
iv	**Mix 40°C (Mixed laundry/Synthetics)**	3,5	02:41	0,740	62	40	40	1000	
v	**Speed 20´** (Speed 20′)	2,5	00:20	0,105	40	28	60	1000	
vi	**Cotton white 60°C + water plus (& water+)**	FL	03:06	1,965	108	60	57	1400	

(3) Data applies to:
[PS22/54140] [PS22/54142] [PS22/54144] [PS22/54146] [PS22/5414C] [PS22/5414F] [PS22/5414G] [PS22/5414H] [PS22/5414I] [PS22/5414J] [PS22/5414K] [PS22/5414L] [PS22/5414M] [PS22/5414P] [PS22/5414R] [PS22/5414S] [PS22/5414T] [PS22/5414U] [PS22/5414V] [PS22/5414Z] [PS22/5414Y]

54 cm / JET / 9 kg:

	Program								
i	**Eco 40-60** (2)	9,0	03:40	0,850	60	33	53	1400	A-10
		4,5	02:46	0,200	44	21			
		2,5	02:47	0,250	41	22			
ii	**Colour 20°C (Colour)**	FL	02:32	0,224	85	60	55	1200	

54 cm / JET / 9 kg:

	Program								
iii	**Cotton white 60°C (Cotton white)**	FL	03:06	1,990	84	60	55	1200	
iv	**Mix 40°C (Mixed laundry/Synthetics)**	3,5	02:41	0,641	65	42	41	1000	
v	**Speed 20´** (Speed 20')	2,5	00:20	0,043	33	29	60	1000	
vi	**Cotton white 60°C + water plus (& water+)**	FL	03:06	2,096	99	60	55	1200	

(3) Data applies to:
[PS22/55141] [PS22/55143] [PS22/55145] [PS22/55147] [PS22/55148] [PS22/55149] [PS22/5514A] [PS22/5514B] [PS22/55141D

60 cm (64 l) / 9kg, 10 kg:

	Program								
i	**Eco 40-60** (2)	9,0	03:22	0,550	64	28	53	1400	A-30
		4,5	02:35	0,250	46	23			
		2,5	02:35	0,220	40	23			
		9,0	03:24	0,860	63	36	53	1400	A
		4,5	02:35	0,385	46	24			
		2,5	02:35	0,250	40	23			
		10,0	03:23	0,600	67	29	53	1400	A-30
		5,0	02:35	0,250	50	22			
		2,5	02:35	0,230	43	22			
		10,0	03:25	0,900	67	33	53	1400	A
		5,0	02:35	0,350	48	22			
		2,5	02:35	0,250	42	19			
ii	**Colour 20°C (Colour)**	FL	02:32	0,197	100	20	55	1200	
iii	**Cotton white 60°C (Cotton white)**	FL	03:06	2,088	110	62	55	1200	
iv	**Mix 40°C (Mixed laundry/Synthetics)**	3,5	02:35	0,528	59	42	41	1000	
v	**Speed 20´** (Speed 20')	2,5	00:20	0,104	40	17	60	1000	
vi	**Cotton white 60°C + water plus (& water+)**	FL	03:06	2,200	130	62	55	1200	

60 cm (64 l) / 9kg, 10 kg:

	Program								
(3) Data applies to: [PS22/5B140] [PS22/5B142] [PS22/5B144] [PS22/5B146] [PS22/5B14C] [PS22/5B14F] [PS22/5B14G] [PS22/5B14H] [PS22/5B14I] [PS22/5B14J] [PS22/5B14K] [PS22/5B14L] [PS22/5B14M] [PS22/5B14P] [PS22/5B14R] [PS22/5B14S] [PS22/5B14T] [PS22/5B14U] [PS22/5B14V] [PS22/5B14Z] [PS22/5B14Y] [PS22/5B140] [PS22/56142] [PS22/56144] [PS22/56146] [PS22/5614C] [PS22/5614F] [PS22/5614G] [PS22/5614H] [PS22/5614I] [PS22/5614J] [PS22/5614K] [PS22/5614L] [PS22/5614M] [PS22/5614P] [PS22/5614R] [PS22/5614S] [PS22/5614T] [PS22/5614U] [PS22/5614V] [PS22/5614Z] [PS22/5614Y]								

60 cm (64 l) / JET / 10 kg:

	Program								
i	**Eco 40-60** (2)	10,0	03:22	0,530	60	26	53	1400	A-40
		5,0	02:35	0,230	45	22			
		2,5	02:34	0,200	38	23			
ii	**Colour 20°C (Colour)**	10,0	02:32	0,237	97	20	55	1200	
iii	**Cotton white 60°C (Cotton white)**	10,0	03:06	2,098	105	62	55	1200	
iv	**Mix 40°C (Mixed laundry/Synthetics)**	3,5	02:41	0,607	65	42	42	1000	
v	**Speed 20´** (Speed 20')	2,5	00:20	0,101	39	17	60	1000	
vi	**Cotton white 60°C + water plus (& water+)**	10,0	03:06	2,108	115	62	55	1200	
(3) Data applies to: [PS22/55141] [PS22/55143] [PS22/55145] [PS22/55147] [PS22/55148] [PS22/55149] [PS22/5514A] [PS22/5514B] [PS22/5514D]									

60 cm (68 l) / 10kg, 10,5 kg, 11 kg:

	Program								
i	**Eco 40-60** (2)	10,0	03:25	0,810	65	32	44	1400	A
		5,0	02:37	0,270	47	22			
		2,5	02:36	0,250	35	22			
		10,0	03:25	0,660	60	31	53	1400	A-30
		5,0	02:37	0,230	45	23			
		2,5	02:36	0,220	32	23			
		10,5	03:25	0,930	66	32	53	1400	A
		5,3	02:37	0,330	50	23			
		2,6	02:36	0,280	40	23			
		11,0	03:25	0,680	66	30	53	1400	A-30
		5,3	02:37	0,260	50	24			

60 cm (68 l) / 10kg, 10,5 kg, 11 kg:									
	Program								
		2,6	02:36	0,250	40	23			
ii	**Colour 20°C (Colour)**	FL	02:32	0,229	89	20	33	1600	
iii	**Cotton white 60°C (Cotton white)**	FL	03:06	1,765	99	62	58	1600	
iv	**Mix 40°C (Mixed laundry/Synthetics)**	3,5	02:41	0,640	59	41	41	1200	
v	**Speed 20´** (Speed 20′)	2,5	00:20	0,104	40	18	60	1200	
vi	**Cotton white 60°C + water plus (& water+)**	FL	03:06	2,081	119	62	57	1600	

(3) Data applies to:
[PS22/58141] [PS22/58143] [PS22/58145] [PS22/58147] [PS22/58148] [PS22/58149] [PS22/5814A] [PS22/5814B] [PS22/5814D]

LABEL

(according to EU-Regulation No. 2019/2014)

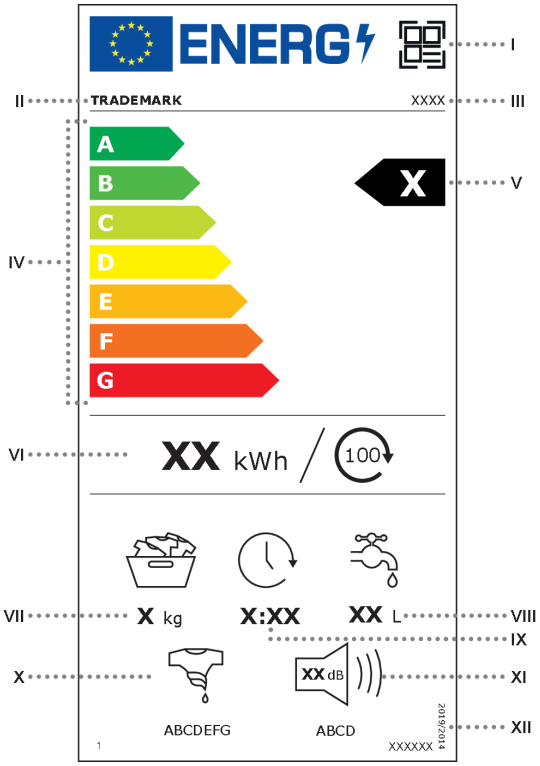

I – QR code;
II – Supplier's name or trade mark
III – Supplier's model identifier
IV – Scale of energy efficiency classes from A to G
V – The energy efficiency class determined in accordance with point A of Annex II
VI – Weighted energy consumption in kWh per 100 cycles, rounded to the nearest integer in accordance with Annex IV
VII – Rated capacity in kg for the eco 40-60 programme
VIII – Weighted water consumption per cycle (WW) in litres, rounded to the nearest integer in accordance with Annex IV
IX – Duration of the eco 40-60 programme at rated capacity in h:min, rounded to the nearest minute
X – Spin-drying efficiency class determined in accordance with point B of Annex II
XI – Airborne acoustic noise emissions during the spinning phase, expressed in dB(A) re 1 pW and rounded to the nearest integer, and the airborne acoustic noise emission class determined in accordance with point C of Annex II
XII – The number of this Regulation, that is, '2019/2014'

PRODUCT INFORMATION SHEET

(according to EU-Regulation No. 2019/2014)

<table>
<tr><td colspan="6">Supplier's name or trade mark:</td></tr>
<tr><td colspan="6">Supplier's adress ([b]):</td></tr>
<tr><td colspan="6">Model identifier:</td></tr>
<tr><td colspan="6">General product parameters:</td></tr>
<tr><td>Parameter</td><td colspan="2">Value</td><td>Parameter</td><td colspan="2">Value</td></tr>
<tr><td rowspan="3">Rated capacity ([a]) (kg)</td><td colspan="2" rowspan="3">x,x</td><td rowspan="3">Dimensions in cm</td><td>Height</td><td>x</td></tr>
<tr><td>Width</td><td>x</td></tr>
<tr><td>Depth</td><td>x</td></tr>
<tr><td>EEI_W [(a)]</td><td colspan="2">x,x</td><td>Energy efficiency class ([a])</td><td colspan="2">[A/B/C/D/E/F/G] ([c])</td></tr>
<tr><td>Washing efficiency index ([a])</td><td colspan="2">x,xxx</td><td>Rinsing effectiveness (g/kg) ([a])</td><td colspan="2">x,x</td></tr>
<tr><td>Energy consumption in kWh per cycle, for the 'eco 40-60' programme. Actual energy consumption will depend on how the appliance is used.</td><td colspan="2">x,xxx</td><td>Water consumption in litre per cycle, based on the 'eco 40-60' programme. Actual water consumption will depend on how the appliance is used and on the hardness of the water.</td><td colspan="2">x</td></tr>
<tr><td rowspan="3">Maximum temperature inside the treated textile ([a]) (°C)</td><td>Rated capacity</td><td>x</td><td rowspan="3">Remaining moisture content ([a]) (%)
Rated capacity</td><td colspan="2" rowspan="3">x,x
Rated capacity</td></tr>
<tr><td>Half Rated capacity</td><td>x</td></tr>
<tr><td>Quarter Rated capacity</td><td>x</td></tr>
<tr><td rowspan="3">Spin speed ([a]) (rpm)</td><td>Rated capacity</td><td>x</td><td rowspan="3">Spin-drying efficiency class ([a])</td><td colspan="2" rowspan="3">[A/B/C/D/E/F/G] ([c])</td></tr>
<tr><td>Half</td><td>x</td></tr>
<tr><td>Quarter</td><td>x</td></tr>
<tr><td rowspan="3">Programme duration ([a]) (h:min)</td><td>Rated capacity</td><td>x:xx</td><td rowspan="3">Type</td><td colspan="2" rowspan="3">[built-in/ free standing]</td></tr>
<tr><td>Half</td><td>x:xx</td></tr>
<tr><td>Quarter</td><td>x:xx</td></tr>
<tr><td>Airborne acoustical noise emissions in the spinning phase ([a]) (dB(A) re 1 pW)</td><td colspan="2">x</td><td>Airborne acoustical noise emissions class ([a]) (spinning phase)</td><td colspan="2">[A/B/C/D] ([c])</td></tr>
<tr><td>Off-mode (W)</td><td colspan="2">x,xx</td><td>Standby mode (W)</td><td colspan="2">x,xx</td></tr>
<tr><td>Delay start (W) (if applicable)</td><td colspan="2">x,xx</td><td>Networked standby (W) (if applicable)</td><td colspan="2">x,xx</td></tr>
<tr><td colspan="6">Minimum duration of the guarantee offered by the supplier ([b]):</td></tr>
</table>

This product has been designed to release silver ions during the washing cycle	[YES/NO]
Additional information:	
Weblink to the supplier's website, where the information in point 9 of Annex II to Commission Regulation (EU) 2019/2023 ([1]) ([b]) is found:	

([a]) For the »eco 40-60« programme.
([b]) Changes to these items shall not be considered relevant for the purposes of paragraph 4 of Article 4 of Regulation (EU) 2017/1369.
([c]) If the product database automatically generates the definitive content of this cell the supplier shall not enter these data.
[1]) Commission Regulation (EU) 2019/2023 of 1 October 2019 laying down ecodesign requirements for household washing machines and household washer-dryers pursuant to Directive 2009/125/EC of the European Parliament and of the Council, amending Commission Regulation (EC) No 1275/2008 and repealing Commission Regulation (EU) No 1015/2010 (see page 285 of this Official Journal).

DISPOSAL



Packaging is made of environmentally friendly materials that can be recycled, disposed of, or destroyed without any hazard to the environment. To this end, packaging materials are labelled appropriately.

The symbol on the product or its packaging indicates that the product should not be treated as normal household waste. Take the product to an authorized collection centre for waste electric and electronic equipment processing.

When **disposing** of the appliance at the end of its useful life, remove all power cords, and destroy the door latch and switch to prevent the door from locking or latching (child safety).

Correct **disposal** of the product will help prevent any negative effects on the environment and health of people, which could occur in case of incorrect product removal. For detailed information on removal and processing of the product, please contact the relevant municipal body in charge of waste management, your waste disposal service, or the store where you bought the product.

gorenje

GORENJE gospodinjski aparati, d.o.o. Address: Partizanska 12, 3320 Velenje, Slovenia
Phone: +386 (0)3 899 10 00 Fax: +386 (0)3 899 28 00 www.gorenje.com

PS22 C+SW GOR

903970-a9

We reserve the right to any changes and errors in the instructions for use.