



27’’ QHD IPS technology panel with USB-C dock and RJ45 (LAN)

Equipped with a USB-C dock connector, the XUB2797QSN allows you to simplify your workspace by using a single cable to both send signal (audio, video and touch) from your notebook to your monitor whilst providing power and charge to the notebook. Additionally, if your monitor is connected to the Internet with a LAN cable, your notebook will automatically be connected to the network as well. Thanks to a DisplayPort output you can easily extend your desktop by creating a double-monitor set-up. The IPS panel assures rich and accurate colours with wide viewing angles. QHD resolution, high contrast and brightness values mean the monitor provides excellent performance for photographic and web design. The ergonomic stand offers a height adjustment of 150mm and with the tilt and swivel mechanisms you can easily turn the monitor into portrait mode for more comfort while working on large data sheets.

Available also without USB-C dock: XUB2797QSU-W2.



USB-C Dock

The dock allows you to connect your laptop with a single cable to the monitor to both make sure it is charged and connected to a wired network and signal from the laptop is sent to the monitor. A second monitor can be connected to the DisplayPort (MST) output to create a multi-monitor set-up. With additional USB-ports, your mouse, keyboard or webcam can also be connected to the monitor. All thanks to a single cable connecting your laptop* to the USB C dock in the monitor.
*Functions vary depending on your laptop USB-C support.



IPS Technology

IPS displays are best known for wide viewing angles and natural, highly accurate colours. They are especially suited for colour-critical applications.

01 DISPLAY CHARACTERISTICS

Design	3-side borderless
Diagonal	27", 68.5cm
Panel	IPS Panel Technology LED, matte finish
Native resolution	2560 x 1440 @100Hz (3.7 megapixel QHD)
Aspect ratio	16:9
Panel brightness	300 cd/m²
Static contrast	1300:1
Advanced contrast	80M:1
Response time (MPRT)	1ms
Viewing zone	horizontal/vertical: 178°/178°, right/left: 89°/89°, up/down: 89°/89°
Colour support	16.7mln (sRGB: 99%; NTSC: 72%)
Horizontal Sync	30 - 151kHz
Viewable area W x H	596.7 x 335.7mm, 23.5 x 13.2"
Pixel pitch	0.233mm
Frame Colour	matte, white

02 INTERFACES / CONNECTORS / CONTROLS

Signal input	HDMI x1 (v.2.0) DisplayPort x1 (v.1.4) USB-C x1 (PD 65W)
Signal output	DisplayPort x1 (2560;1440)
USB HUB	x4 (3x v.3.2 Gen 1 (5Gbps, 4.5W) 1x Type C (5Gbps, 15W))
USB-C DOCK	x1 (Power delivery 65W, LAN, DP out, USB v.3.2 (Gen 1, 5Gbit))
HDCP	yes
Headphone connector	yes
RJ45 (LAN)	x1

03 FEATURES

Blue light reducer	yes
Flicker free	yes
Adaptive Sync support	yes
Extra	i-Style colour
OSD languages	EN, DE, FR, ES, IT, RU, JP, CZ, NL, PL
Control buttons	Power, Menu, Adjustment/Volume, Adjustment/Shortcut Menu, Input/Exit
User controls	picture adjust (brightness, contrast, Eco, ACR, OD, MBR, Adaptive Sync), colour settings (i-Style colour, blue light reducer, colour temp., user preset), OSD (OSD H. position, OSD V. position, OSD rotate, OSD time), language, recall, miscellanous 1 (sharp and soft, video mode adjust, opening logo, RGB range), miscellaneous 2 (USB BC, MST, USB, LED, display information, MAC address), input select, audio settings (volume, mute)
Speakers	2 x 2W
Convenience	Kensington-lock™ prepared, DDC2B

04 MECHANICAL

Display position adjustments	height, swivel, tilt, pivot (rotation both sides)
Height adjustment	150mm

Rotation (PIVOT function)	90°
Swivel stand	120°; 60° left; 60° right
Tilt angle	23° up; 5° down
VESA mounting	100 x 100mm
Cable management system	yes

05 ACCESSORIES INCLUDED

Cables	power, HDMI, DP, USB-C
Other	quick start guide, safety guide

06 POWER MANAGEMENT

Power supply unit	internal
Power supply	AC 100 - 240V, 50/60Hz
Power usage	26W typical, 0.5W stand by, 0.3W off mode

07 SUSTAINABILITY

Regulations	TCO Certified, CE, TÜV-GS, EAC, VCCI-B, PSE, RoHS support, ErP, WEEE, REACH, UKCA
Energy efficiency class (Regulation (EU) 2017/1369)	E
EPEAT Silver	EPEAT is a comprehensive environmental rating that helps identify greener computers and other electronic equipment. The Silver certification means the monitor meets all required criteria plus at least 50% of the optional requirements. EPEAT Silver is valid in countries where iiyama registers the product. Please visit www.epeat.net for the registration status in your country.
REACH SVHC	above 0.1%: Lead, Lead monoxide, Diboron trioxide
Warranty	5 years (for details and eligible countries please check the Warranty section of our website)

08 DIMENSIONS / WEIGHT

Product dimensions W x H x D	613.5 x 400.5 (550.5) x 209.5mm
Box dimensions W x H x D	679 x 427 x 130mm
Weight (without box)	6.1kg
Weight (with box)	8.7kg
EAN code	4948570125036

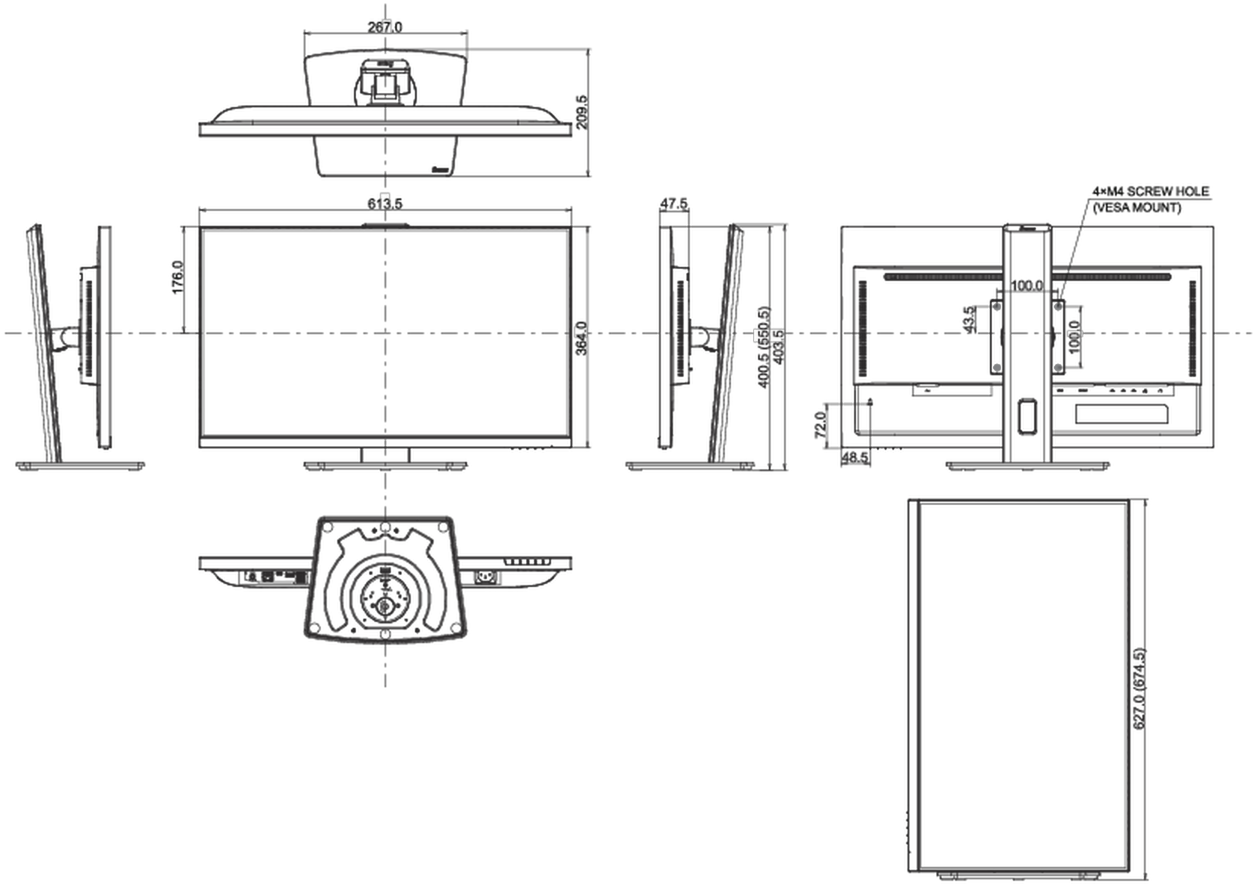

All trademarks and registered trademarks acknowledged. E & O E. Specification subject to change without notice. All LCD's comply with ISO-9241-307:2008 in connection with pixel defects.

© IIYAMA CORPORATION. ALL RIGHTS RESERVED