BENQ EX251

Unit : mm
Dimension : Normal
Drawing : Not to Scale

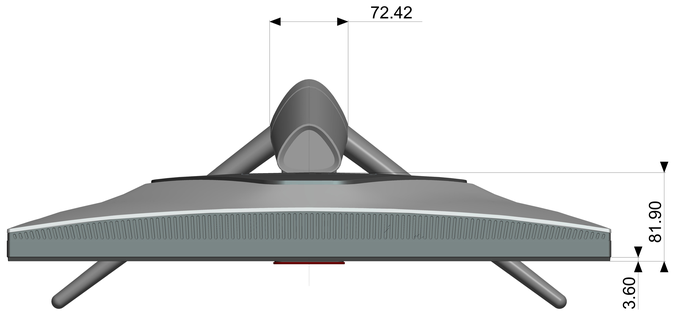

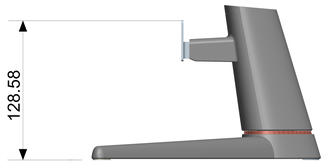

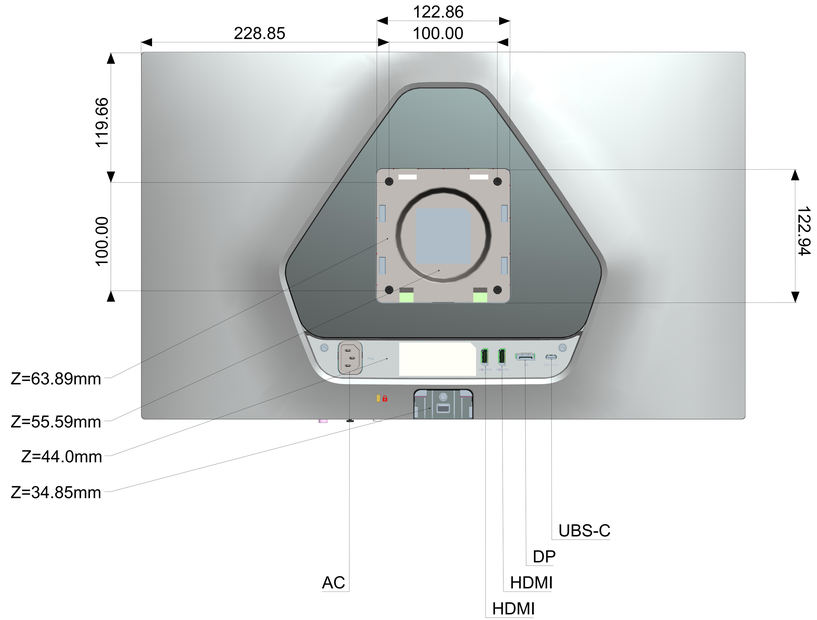

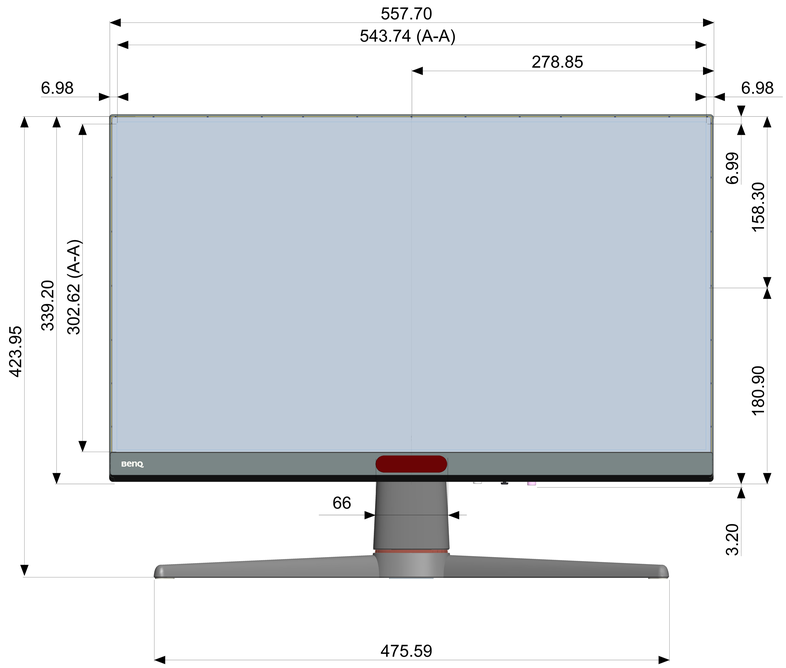

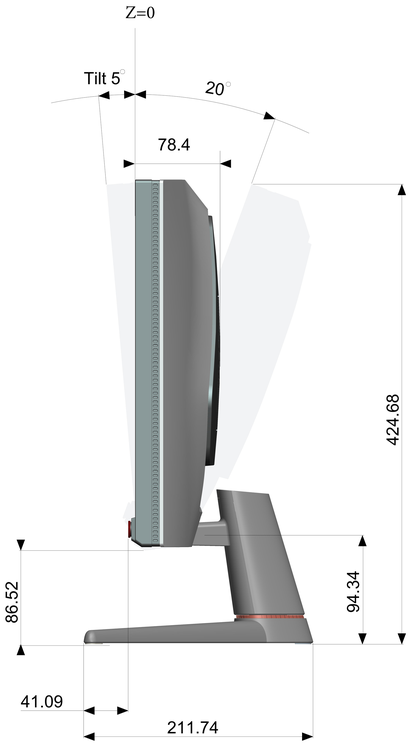

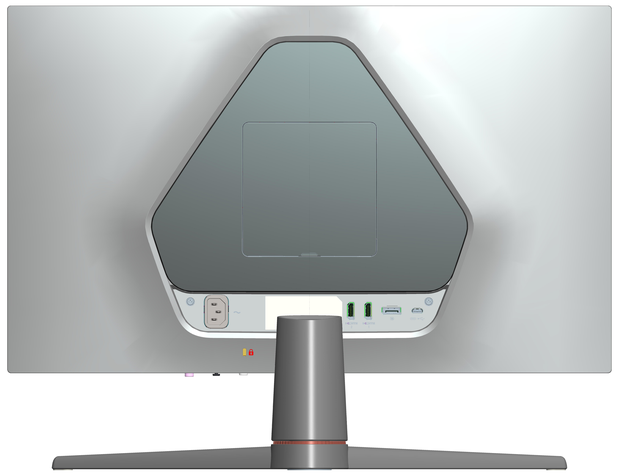

RoHS