Dishwasher

User Manual



BDIN38451

15 3004 0100/ EN/ AA/ 21.04.2025 09:26
7643693877

RECYCLED &
RECYCLABLE PAPER

Please read this manual first!

Dear Customer,

Beko thank you for choosing the product. We hope that you get the best results from your product which has been manufactured with high quality and state-of-the-art technology. Therefore, please read this entire user manual and all other accompanying documents carefully before using the product.

Follow all warnings and information in the user manual. By this way, you will protect yourself and your product against possible dangers.

Keep the user manual as a reference for future use. If you handover the product to someone else, give the user manual as well. The warranty conditions, usage and troubleshooting methods for your product are provided in this manual.

Symbols and Their Explanations

Throughout this user manual the following symbols are used:

	Danger that may result in death or injury.
	Important information or useful hints about usage.
	Read the user manual.
NOTICE	Danger to the product or its surroundings that may result in material damage.

Contents

1 Safety Instructions 5

1.1 Intended Use 5
1.2 Child, vulnerable person and pet safety 5
1.3 Electrical safety 6
1.4 Transportation Safety 7
1.5 Installation Safety 7
1.6 Operation Safety 8
1.7 Maintenance and Cleaning Safety 9
1.8 Interior Light Bulb Replacement ... 9

2 Environmental Instructions 9

2.1 Compliance with WEEE Regulation and Disposal of Waste Products 10
2.2 Package Information 10
2.3 Compliance with WEEE Directive and Disposing of the Waste Product 10
2.4 Note for Test Institutes 10
2.5 Standard conformity and test information / EC declaration of conformity 11
2.6 This section applies for products with Wifi feature. 11
2.7 Energy Label 11
2.8 Comformity Declaration for UKCA 11

3 Technical Specifications 12

4 General View 13

5 Installation 14

5.1 Correct location for installation 14
5.2 Connecting to the water supply 14
5.3 Connecting to the water drain 15
5.4 Adjusting the feet 15
5.5 Electricity connection 15
5.6 Fitting a Different Plug 15

6 Preparation 16

6.1 Considerations for energy saving 16
6.2 Water softening system 16
6.3 Setting the Water Softening System 17
6.4 Filling the salt 18
6.5 Detergent 19
6.6 Rinse aid 22
6.7 Parts not suitable for washing in the dishwasher 23
6.8 Placing the dishes in the dishwasher 23
6.9 Lower Spray Arm 24
6.10 Upper Spray Arm 24
6.11 Cutlery basket 24
6.12 Cutlery basket 25
6.13 Foldable lower basket wires 25
6.14 Lower basket multi-purpose / height-adjustable serving rack 26
6.15 Height Adjustable Upper Basket Rack 27
6.16 Lower basket with bottle wire 27
6.17 Upper basket multi-function service rack 27
6.18 Upper basket multi-function service rack 28
6.19 Adjusting the height of the upper basket 29
6.20 Adjusting the height of the upper basket 29
6.21 Adjusting the height of the upper basket 30
6.22 Tray Washing Support 30
6.23 Bottle and Dish Holder on the Lower Basket 31
6.24 Foldable upper basket wires 31
6.25 Cutlery basket 32
6.26 Cutlery basket 32

7 Operation of the Product 33

7.1 Operation of the Product 33
7.2 Program Information and Average Consumption Values Table 35
7.3 Additional functions 37
7.4 Functions 38
7.5 Functions Under the Settings Menu 38
7.6 Changing the Warning Tone Level 39
7.7 Programming the Washing Time .. 39
7.8 Starting the Cycle 39
7.9 Cancelling the Cycle 40
7.10 Low Salt Warning Indicator 40
7.11 Low Rinse Aid Warning Indicator .. 40
7.12 Setting the Rinse Aid Amount 40
7.13 End of programme 40

8 Maintenance and Cleaning 41

8.1 Maintenance and cleaning..... 41
8.2 Cleaning the filters 41
8.3 Cleaning the hose filter 42
8.4 Cleaning the propellers 42
9 Troubleshooting..... 44
9.1 Error Codes, Causes and Solutions..... 44
9.2 Troubleshooting 44
10 DISCLAIMER / WARNING 48

1 Safety Instructions

This section contains safety instructions that will help protect from risk of personal injury or property damage.
Our company shall not be held responsible for any damages that may arise in case of non-compliance with these instructions.

- Installation and repair procedures must always be performed by Authorised Service Agents.
- Use only original spare parts and accessories.
- Do not repair or replace any component of the product unless it is clearly specified in the user manual.
- Do not make technical modifications to the product.

1.1 Intended Use

This product is intended for use in homes and in the following types of enclosed spaces: For example;
- Staff kitchens of shops, offices and other working environments;
- Farm houses;
- Areas for the use of guests of hotels, motels and other accommodation facilities;
- Places serving bed and breakfast, hostel-like environments.
- The product should only be used for household dish washing.

- The product is not suitable for commercial or public use.
- The lifetime of the product you have purchased is 10 years. This is the period for which the spare parts required for the operation of this product as defined.
- This product is intended for use in the home and under counter.

1.2 Child, vulnerable person and pet safety

- 8 years and older children and people with reduced physical, sensory, and mental abilities as well as unskilled or inexperienced persons can use this appliance provided that they are supervised and instructed on safe use of the appliance as well as to the related dangers.
- Children under 3 years of age should be kept away from the product unless constantly supervised.
- Children should not play with the appliance.

- Electrical products are dangerous for children and pets. Children and pets must not play with, climb on or enter into the product.
- Remember to close the door of the product when leaving the room where the product is located. Children and pets can be locked inside the product and suffocate.
- Cleaning and user maintenance must not be made by children without supervision.
- Keep the packing materials away from the children. Risk of injury and suffocation.
- Keep all detergents and additives used in the product out of the reach of children.
- For the safety of children, disconnect the power plug and break the locking mechanism before disposing of the product.

1.3 Electrical safety

- The product must not be plugged in during installation, maintenance, cleaning, repair and transport.
- If the power cord is damaged, it must be replaced by an authorised service centre to prevent possible hazards.
- Do not pinch the power cord under or behind the product. Do not place a heavy object on the power cord. The power cord must not be excessively bent or crushed, and must not come into contact with any heat source.
- Do not use an extension cord, multiple power outlets, or adapters to operate the product.
- Portable multiple power outlets or portable power supplies can overheat and cause a fire. Therefore, do not keep multiple power outlets behind and near the product.
- The plug must be within easy reach. If this is not possible, the electrical installation to which the product is connected must be equipped with a device (fuse, switch, circuit breaker, etc.) that complies with electrical regulations and disconnects all poles from the mains.
- Do not touch the plug with wet hands.
- When removing the plug from the socket, pull it by the plug, not by the cable.

1.4 Transportation Safety

- Before transporting the product, unplug the plug and disconnect the drain and water supply connections. Drain the water remaining inside the product completely.
- Do not carry the product alone as it is heavy.

NOTICE Do not hold the door or panel to move the product.

NOTICE If you have to move the product, move it in an upright position and hold it by the back. Tilting the product towards the front may cause the electronic parts inside to get wet and damaged.

NOTICE When putting the product in place after installation or cleaning, take care not to fold, pinch or break the hoses.

1.5 Installation Safety

- To make the product ready for use, check the information in the manual and installation instructions to make sure that the electrical installation, clean water installation and drainage are appropriate. Otherwise, call a qualified electrician and plumber to make the necessary arrangements. These processes are at the customer's expense.
- Before installing the product, inspect the product for any damage. Do not install the product if it is damaged.
- Do not install the product in places where the temperature drops below 0 °C.
- Do not place the product on a carpet or similar surface. It causes fire risk since it cannot get air from the bottom.
- Place the product on a clean, flat and hard floor and balance it with the help of adjustable feet. If the feet are not adjusted properly, the door may not close completely and hot vapour may escape. It may cause serious burns and injuries and may also damage your furniture.
- Do not install the product near heat sources (radiators, stoves, etc.) and do not install it under the cooking area of a hob.
- If the product is intended to be used in a cupboard/cabinet/module, keep the cupboard doors open during operation if there are no gaps to ensure sufficient air circulation.

- Connect the product to an earth-grounded socket protected by a fuse rated in accordance with the current ratings indicated on the rating plate. Have the earthing installation done by a qualified electrician. Do not use the product without earthing in accordance with local/national regulations.
- Plug the product into an outlet complying with the voltage and frequency values indicated on the rating plate.
- Do not plug the product into sockets that are loose, out of the socket, broken, dirty, greasy, at risk of contact with water (e.g. water that may leak from the workbench).

NOTICE The new hose sets supplied with the product must be used. Do not reuse old hose assemblies. Do not splice the hoses.

NOTICE Connect the water inlet hose directly to the water tap. The pressure supplied from the tap must be at least 0.03 MPa (0.3 bar) and no more than 1 MPa (10 bar). If the water pressure exceeds 1 MPa (10 Bar), a pressure reducing valve must be installed. Maximum allowable water temperature is 25°C.

- Position the power cable and hoses so that there is no risk of tripping.

1.6 Operation Safety

Only detergents, rinse agents and additives intended for dishwashers should be used.

Never use chemical solvents in the product. These substances pose a risk of explosion.

Do not drink the wash water in your product.

Dishwasher detergents contain strong alkali, which can be extremely dangerous if swallowed. Avoid contact with skin and eyes and do not allow children near the product when the lid is open. Check that the detergent tank is empty after the wash cycle is completed.

When you pull out the upper and lower baskets completely, the door of the product takes the entire load of the baskets. Do not sit or place other loads on the door, otherwise the product may tip over.

Product's Maximum Washing capacity: Indicated on the Energy Label and Quick Use Card under Cycle Table.

To avoid possible injury, always place long and pointed dishes such as serving forks, bread

knives, etc. in the cutlery basket with the pointed end downwards or horizontally on the dishwashing baskets.

If you need to open the door while the product is running, open it carefully. Be careful of hot steam and splashes of hot water.

Do not operate a faulty or damaged product. Unplug the product (or switch off the fuse to which it is connected), turn off the water tap and call for authorised service.

Do not place a flame source (burning candle, cigarette, etc.) on or near the product. Do not place flammable/explosive materials near the product.

Do not climb on the product.

Unplug the product and switch off the tap when you will not use the product for a long time.

This product is designed to operate up to 2000 m. above sea level.

1.7 Maintenance and Cleaning Safety

Do not wash the product by spraying or pouring water on it.

Do not use sharp or abrasive tools to clean the product. Do not use materials such as household cleaning agents, detergents, gas, gasoline, alcohol, wax, etc.

Wear gloves worn when cleaning the product.

Be careful of possible injuries when cleaning sharp surfaces on the back of the product!

NOTICE! Remember to install the filter of your machine back after cleaning it. Otherwise, the pumps may get clogged and the product may get damaged.

Interior Lighting

Contact a service when you need to replace the LED/bulb used for lighting according to the model of your machine.

1.8 Interior Light Bulb Replacement

Contact an authorized service when you need to replace the LED/bulb used for lighting according to the model of your machine.

2 Environmental Instructions

Frequency Band : 2.400-2.484 Ghz
Max. Transmission Power : < 100mWConformity declaration for UKCA

Beko hereby declares that this appliance complies with The Radio Equipment Regulations 2017.

The complete text of the UK declaration of conformity is available in the following internet address:
support.beko.com

2.1 Compliance with WEEE Regulation and Disposal of Waste Products

This product does not contain harmful and prohibited substances specified in the "Regulation on the Control of Waste Electrical and Electronic Equipment" published by the Ministry of Environment and Urbanisation of the Republic of Turkey. It complies with WEEE Regulation.



This product is manufactured from high quality parts and materials that are recyclable and reusable. Therefore, do not dispose of the product with household or other waste at the end of its service life. Take it to a collection point for recycling electrical and electronic equipment. Ask the local authority in your area for these collection points. Help protect the environment and natural resources by recycling used products. Before disposing of the product, disconnect the power plug for the safety of children and break the locking mechanism of the loading door to render it inoperable.

2.2 Package Information

The packaging of the product is made of recyclable materials in accordance with our National Legislation. Do not dispose of packaging waste with household or other waste, dispose of it at the packaging collection points specified by the local authorities.

2.3 Compliance with WEEE Directive and Disposing of the Waste Product

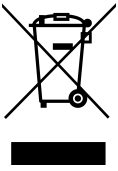

This product complies with EU WEEE Directive (2012/19/EU). This product bears a classification symbol for waste electrical and electronic equipment (WEEE).
This symbol indicates that this product shall not be disposed with other household wastes at the end of its service life. Used device must be returned to official collection point for recycling of electrical and electronic devices. To find these collection systems please contact to your local authorities or retailer where the product was purchased. Each household performs important role in recovering and recycling of old appliance. Appropriate disposal of used appliance helps prevent potential negative consequences for the environment and human health.

Compliance with RoHS Directive:
The product you have purchased complies with EU RoHS Directive (2011/65/EU). It does not contain harmful and prohibited materials specified in the Directive.

2.4 Note for Test Institutes

The information required for performance tests is available on request.
You can send your request via the e-mail address below:
dishwasher@standartloading.com

In your enquiry e-mail, be sure to include your contact details as well as the code, stock number and serial number of the product to be tested. The product code, stock number and serial number can be found on the type label attached to the side of the door

2.5 Standard conformity and test information / EC declaration of conformity

The development, production and sale of this product are carried out in accordance with the safety regulations of all relevant directives of the European Community. 2014/35/EU, 2014/30/EU, 93/68/EC, IEC 60436 / EN 60436

2.6 This section applies for products with Wifi feature.

Frequency Band 2.4Ghz
Max. Conduction Power : < 100mW
Declaration of conformity for CE Arçelik A.Ş. hereby declares that this appliance complies with Directive 2014/53/EU.
The full text of EU Conformity Declaration is on the web site:
Products, address
support.beko.com

2.7 Energy Label

You can access technical information about the product by scanning the QR code on the energy label with a mobile device connected to the internet.



2.8 Comformity Declaration for UKCA

Frequency Band : 2.400-2.484 Ghz
Max. Transmission Power : < 100mW
ARÇELİK hereby declares that this appliance complies with The Radio Equipment Regulations 2017. The complete text of the UK declaration of conformity is available in the following internet address: support.beko.com

3 Technical Specifications

Maximum washing capacity: Indicated on the Energy Label and Quick Use Card under Cycle Table.
Height: See installation manual for height information.
Width: 60
Depth:57
Electricity input:220-240 V, 50 Hz
Total power:1800-2100 W
Heater power:1800 W
Total current: 10 A *
Pump power:105 W
Drain pump power: 30 W *
* For detailed electrical values see the type label on the dishwasher's door.
Water Pressure 0.3 -10 bar (= 3 – 100 N/cm² = 0.03-1.0 Mpa)

Technical specifications may be amended without prior notice to improve product quality.

The figures in the manual are schematic and may not be in exact harmony with the product.

The values provided with the appliance or its accompanying documents are laboratory readings in accordance with the respective standards. These values may differ depending on the use and ambient conditions.

4 General View

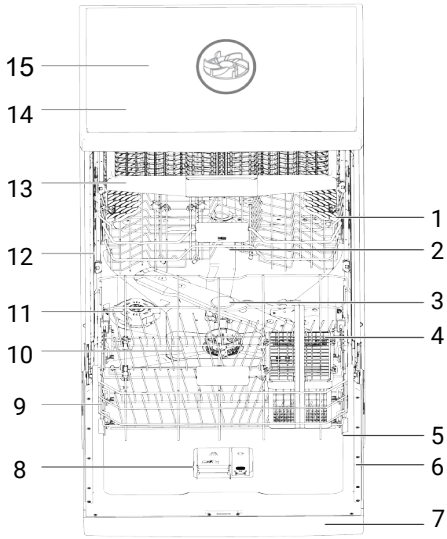

1 Upper Basket
2 Upper Spray Arm
3 Lower Spray Arm
4 Cutlery Basket(depends on the model)
5 Door
6 Type Label
7 Control Panel
8 Detergent Compartment
9 Lower Basket
10 Filters
11 Salt Compartment Cover
12 Upper Basket Rail
13 Ceiling Cutlery Basket (depends on the model)
14 Upper Rack (depends on the model)
15 Upper Impeller (depends on the model)

Type label varies depending on the model.



Illustration 1:

5 Installation

Read the 'Safety Instructions' section first!

The preparation of the electrical, clean water and waste water installation of the place where the product will be placed is under the responsibility of the customer. Before calling the authorised service to make the product ready for use, if the electrical installation, clean water installation and water drainage are not suitable, call a qualified electrician and plumber to make the necessary arrangements.

Installation and electrical connections must be carried out by the authorised service. The manufacturer cannot be held responsible for any damages that may arise from the operations performed by unauthorised persons.

Before installing the product, inspect the product for any damage. Do not install the product if it is damaged. Damaged products pose a danger to your safety.

For free-standing and under-counter models, do not remove the kick plate of the appliance. This will void the warranty.

- When placing the product in place after installation or cleaning, make sure that the water inlet and drain hoses are not folded, pinched or broken.
- Be careful not to damage the floor, wall, pipes, etc. when placing the product. Do not hold the door or panel to move the product.

5.1 Correct location for installation

- There must not be any lockable, sliding or hinged doors in the place where the product is installed, which would restrict the full opening of the door.
- Place the product on a solid and level surface with sufficient load-bearing capacity! Placing the dishwasher on a level surface is essential for the door to close properly and tightly.
- Do not install the product in places where the temperature drops below 0 ºC.
- Place the product on a hard floor. Do not place it on a long-pile carpet or similar surface.
- Choose a place where you can load and unload the dishes easily and quickly.
- Place the product close to the tap and drain. Choose the location of the product in such a way that you do not change it after it has been connected.

Do not place the product on the power cable. The cable may be damaged, causing a risk of electric shock or fire.

5.2 Connecting to the water supply

To prevent dirt (sand, clay, rust, etc.) from the city network or your water supply system from damaging the dishwasher and your dishes, we recommend installing a filter on the water inlet.

Maximum allowable water inlet temperature:

- With AquaSafe+ feature containing models, it is 60 °C.
- Up to 25 °C for other models.

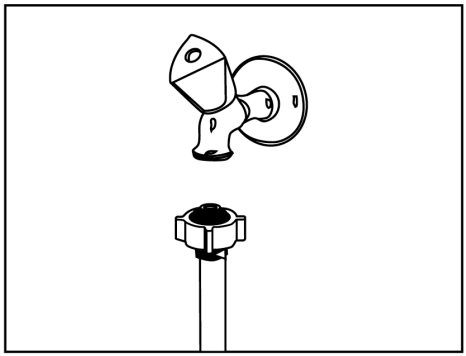

The dishwasher must not be connected to warm water appliances or running water heaters.

NOTICE Do not use an old or used water inlet hose on a new product. Use the new water inlet hose supplied with the dishwasher. Do not splice the hoses.

NOTICE Connect the water inlet hose directly to the water tap. The pressure supplied from the tap must be at least 0.3 and no more than 10 bar. If the water pressure exceeds 10 Bar, a pressure reducing valve must be installed.

NOTICE The water supply and drain hose must be securely fastened and undamaged.

NOTE After making the connections, open the tap fully and check for water leaks.

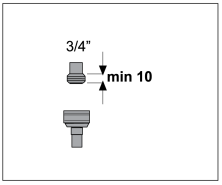

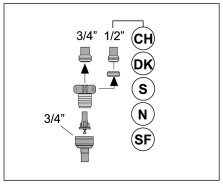

5.3 Connecting to the water drain

The water drain hose can be connected directly to the waste water drain or to the drain of the sink. For more detailed information, refer to the installation instructions supplied with your dishwasher.

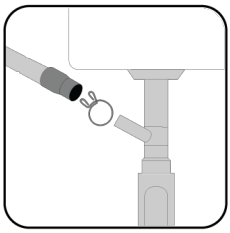

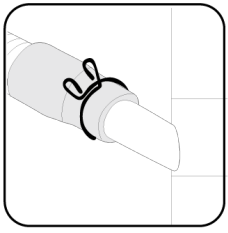

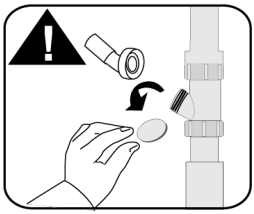

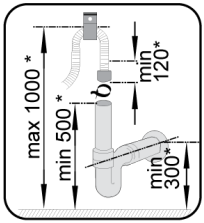

* mm

The waste water drain must be connected to the sewer and must not be connected to surface water.

5.4 Adjusting the feet

If the door of the product does not close properly or shakes when you push it gently with your hand, this means that the feet are not adjusted. Adjust the feet of the product as shown in the installation manual supplied with the product.

Hot steam may escape if the dishwasher door is not adjusted properly. Serious burns can cause injury and damage your furniture.

5.5 Electricity connection

Connect the product to a grounded socket protected by a fuse in accordance with the values in the "Technical specifications" table. Our company shall not be responsible for any damages that may occur if the product is used without grounding in accordance with local regulations.

- The connection must comply with national regulations.
- The plug of the power cord must be easily accessible following the installation.
- Connect the product to a grounded socket protected by a 16 ampere fuse.
- The specified voltage must be equivalent to your mains voltage.

Do not connect with extension cords or multiple sockets.

A damaged power cord must be replaced by authorised service.

5.6 Fitting a Different Plug

As the colours of the wires in the mains lead of this appliance may not correspond with the coloured markings identifying the terminals on your plug, proceed as follows:

1.Connect the green - yellow or green (earth) wire to the terminal in the plug marked ‘E’ or with the symbol or coloured green and yellow or green.
2.Connect the blue (neutral) wire to the terminal in the plug marked ‘N’ or coloured black.
3.Connect the brown (live) wire to the terminal in the plug marked ‘L’ or coloured red.

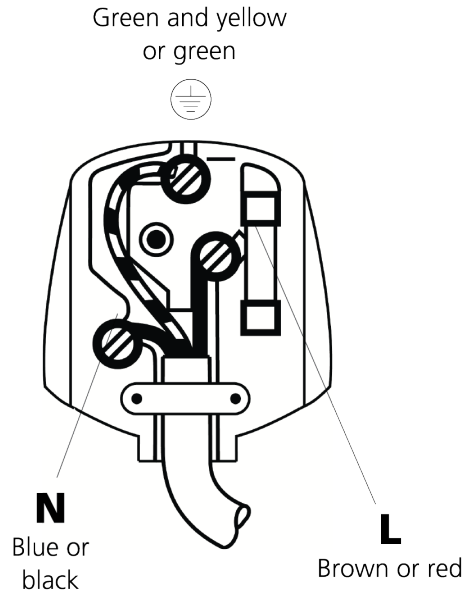

With the alternative plugs a 13A fuse must be fitted either in the plug or adaptor or in the main fuse box. If in doubt contact a qualified electrician.

6 Preparation

Read the ‘Safety Instructions’ section first!

6.1 Considerations for energy saving

The following information will help you to use the product in an ecological and energy-saving way.
Remove all coarse waste before placing the dishes in the dishwasher.

It is not recommended to pre-clean the dishes before loading them into the dishwasher as this will consume energy and water.

Washing the dishes in the dishwasher consumes less energy and water than washing them by hand.

Start the dishwasher after it is fully loaded.

Pay attention to the "Cycle Information and Average Consumption Table" when selecting a cycle.
Do not use more detergent than recommended on the detergent packaging.

6.2 Water softening system

The dishwasher is equipped with a special water softening system that reduces the hardness of the mains water. This system softens the water to the level required for washing dishes to the desired quality.

Mains water must be softened if its hardness is above 7°dH. Otherwise hardness ions will accumulate on the washing utensils and may affect the washing, rinsing and drying performance of the dishwasher.

Setting the water softening system

Washing efficiency will be improved when the water softening system is set correctly. Read the section on adjusting the water softening system first.

Regeneration of the water softening system can take place in all cycles during the drying step. When regeneration is performed, the duration of the cycle, energy and water consumption are increased. For the regeneration process, the table below shows the frequency of the regeneration process, maximum additional time, water and energy consumption depending on the water consumption for the Eco 50 °C cycle when the dishwasher is operated under standard conditions with a water supply of 14 dH.

Eco 50 °C water consumption (l)	renew after .... cycle	Additional time (min)	Additional water consumption (l)	Additional energy consumption (kWh)
12.3-14.7	5	5	3.0	0.05
9.6-12.2	6	5	3.0	0.05
9.0-9.5	7	5	3.0	0.05
8.0-9.0	8	5	3.0	0.05
7.0-7.9	9	5	3.0	0.05

For water consumption in the Eco 50 °C cycle of your dishwasher, refer to the Cycle Information and Average Consumption Values Table given in the Cycle Table.

6.3 Setting the Water Softening System

Setting the water softening system correctly will improve your dishwasher's washing, rinsing, and drying performance.

NOTICE! To set the system, first find out your water hardness level from the authorised service in your region and set it as follows.

After determining the water hardness:

1. After turning on your dishwasher, press the Menu button for 3 seconds.

In some models, you just need to press the menu key 1 time to access the settings menu.

2. Using the <- and +> buttons, scroll until the water hardness setting indicator lights up (position "r" appears on the display).
3. Set the water hardness to a proper level for the hardness of your mains water with the Select key. For the correct setting, refer to the "Water hardness level setting table".
4. Save by pressing On / Off key.

Hardness Level	English Hardness °dE	German Hardness °dH	French Hardness °dF	Water Hardness Level Indicator
0. Level 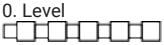	0-5	0-4	0-8	Bring the water hardness setting to position 1 by pressing the Select key. (r1)
1. Level 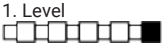	6-9	5-7	9-13	Bring the water hardness setting to position 1 by pressing the Select key. (r1)
2. Level 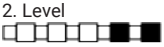	10-15	8-12	14-22	Bring the water hardness setting to position 2 by pressing the Select key. (r2)

3. Level	16-19	13-15	23-27	Bring the water hardness setting to position 3 by pressing the Select key. (r3)
4. Level	20-24	16-19	28-34	Bring the water hardness setting to position 4 by pressing the Select key. (r4)
5. Level	25-62	20-50	35-90	Bring the water hardness setting to position 5 by pressing the Select key. (r5)

Table 1: Water Hardness Level Setting Table

Make the same hardness level you set on the control panel with the regeneration adjustment switch. For example, if the setting on the control panel is 3, set the regeneration setting switch to 3.

- If the hardness of the water you use is above 50°dH (French hardness) or if you use well water, it is recommended to use filters and water purifiers.
- If the hardness of the water you use is below 7°dH, you do not need to use salt in your dishwasher. In this case, the "Low Salt Indicator Light" on your dishwasher control panel will be on continuously.
- If your water hardness setting is at level 1, the "Low Salt Indicator Light" will remain on continuously even though you do not need to use salt. If you do add salt in this position, the salt will not be consumed and the lamp will not come on.

In case of relocation, you need to adjust the water hardness setting of your dishwasher again according to the water hardness of the place you move to, taking into account the information given above. If the water hardness setting of your dishwasher has been adjusted before, the last water hardness setting will be displayed on the screen of your dishwasher.

Mechanical Water Hardness Adjustment

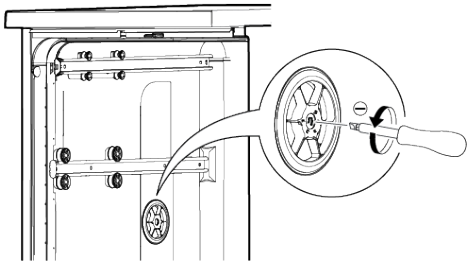

The glassware care setting is used to alter the hardness of the pre-softened wash water in the dishwasher. Make the adjustment according to the water hardness setting. Make the adjustment using a wide, flat screwdriver. Use the screwdriver to turn the mechanical glassware care adjustment switch. Simply turn the mechanical switch to the same position as the water hardness setting.

For example,

Set the Mechanical Glassware Care adjustment switch to position 3 for water hardness setting "r3"

Set the Mechanical Glassware Care adjustment switch to position 4 for water hardness setting "r4"

6.4 Filling the salt

The water softening system must be renewed in order for the dishwasher to operate at the same performance at all times. Dishwasher salt is used for this purpose.

Only use special softening salt for use in dishwashers.

It is recommended to use granulated or powdered softening salts in the water softening system. Do not use salts such as table salt and rock salt that do not dissolve completely in water. Otherwise, the performance of the system may deteriorate over time.

The salt compartment fills with water when you switch on the dishwasher. Therefore, fill the salt compartment before starting the dishwasher.

1. Initially remove the lower basket to load softening salt.
2. Open the salt compartment lid by turning it anti-clockwise (A).

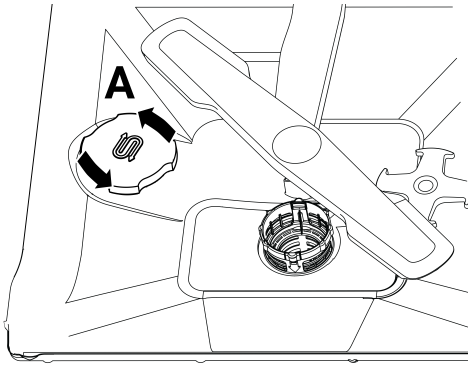

3. Only add 1 litre of water to the salt compartment when using your dishwasher for the first time.
4. Fill the salt compartment with salt (D). Stir with a spoon to speed up the dissolution of the salt in the water.

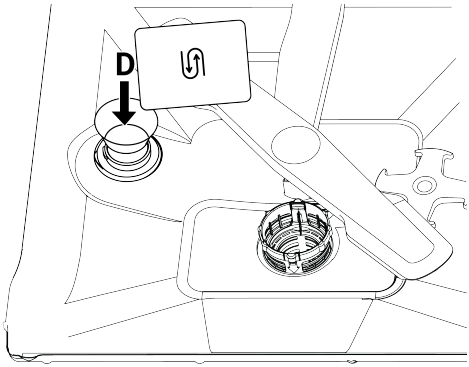

You can put approx. 2 kg of softening salt in the salt compartment.

1. When the compartment is full, replace the lid and close by turning.

Adding salt should be performed just before starting the dishwasher. In this way, the overflowing brine is cleaned immediately and the risk of corrosion inside the dishwasher is prevented. If you are not going to wash immediately, run the dishwasher empty and without detergent in the shortest cycle.

Depending on the different salt particle sizes of different brands on the market and the water hardness, it may take several hours for the salt to dissolve in the water. For this reason, the "Salt Shortage Warning Indicator" will remain on for a certain period of time after the salt is filled into the dishwasher.

6.5 Detergent

You can use powder, liquid / gel and tablet detergent in the dishwasher.

Use only detergents intended for use in dishwashers. We recommend that you do not use detergents containing chlorine and phosphates as these are harmful to the environment.

Filling the detergent

For good washing and drying results, observe the instructions on the detergent packaging. Contact the detergent manufacturer for further questions.

Do not put solvents in the detergent compartment. There is a risk of explosion!

Put the detergent in the detergent compartment as follows immediately before starting the dishwasher.

1. Open the detergent compartment door by pushing the latch to the right (A).(depends on the model)

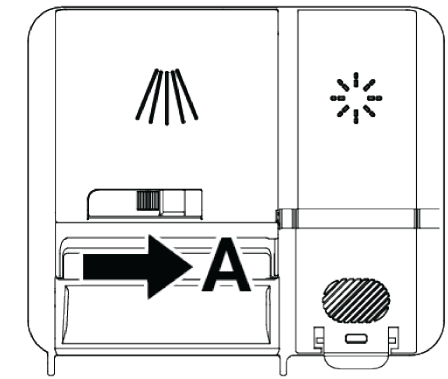

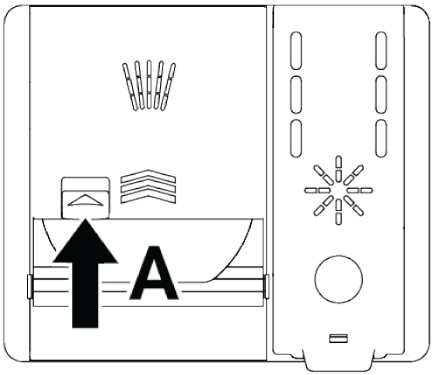

2. Put the specified amount of powder, liquid/gel or tablet detergent into the compartment.

There are level lines on the inside of the detergent compartment to help you use the correct amount of powdered detergent. The detergent compartment holds 45 cm³ of detergent when fully loaded. Fill the detergent compartment up to the level lines of 15 cm³ or 25 cm³ of detergent, depending on how full the dishwasher is and/or how dirty your dishes are. If tablet detergent is used, one tablet is sufficient.

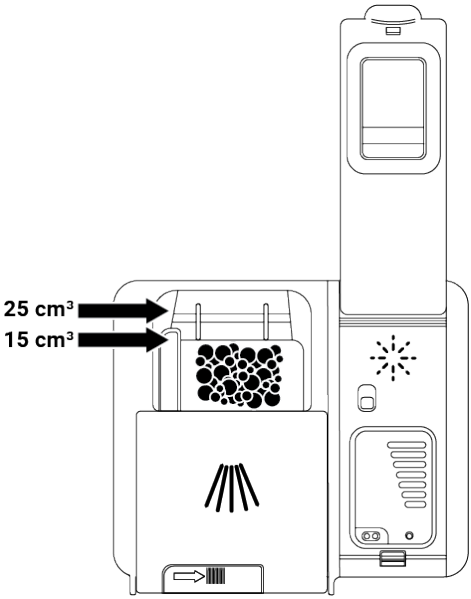

3. Close the lid of the detergent compartment by pushing it in the direction of the arrow. A "click" sound is heard when the lid is closed.

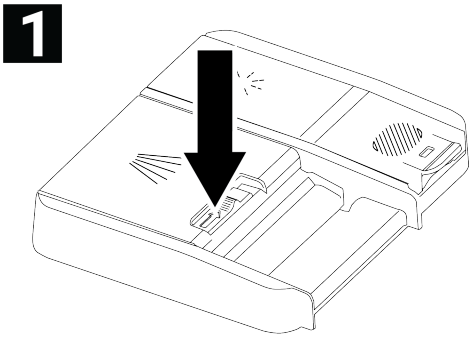

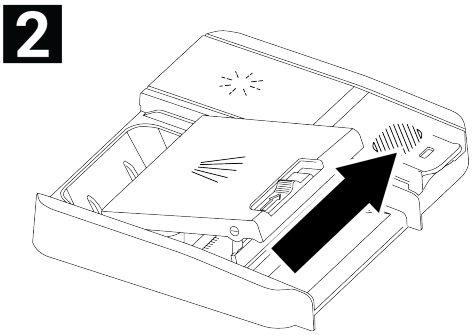

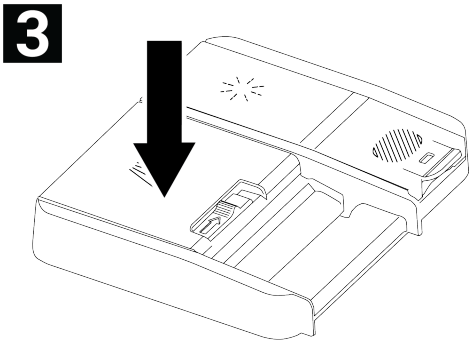

Since the solubility of tablet detergents varies depending on temperature and time, always use powder or liquid/gel detergent in short cycles without pre-wash.

Tablet detergents

In addition to conventional tablet detergents, there are also tablet detergents on the market that contain water softening salt and/or rinse aid. Some of them also contain special components such as glass preservatives and stainless steel preservatives. These tablets work up to a certain water hardness level (21°dH). Water softening salt and rinse aid should be used together with the tablet detergent above this level. The best washing performance in dishwashers is achieved by using detergent, rinse aid and water softening salt separately.

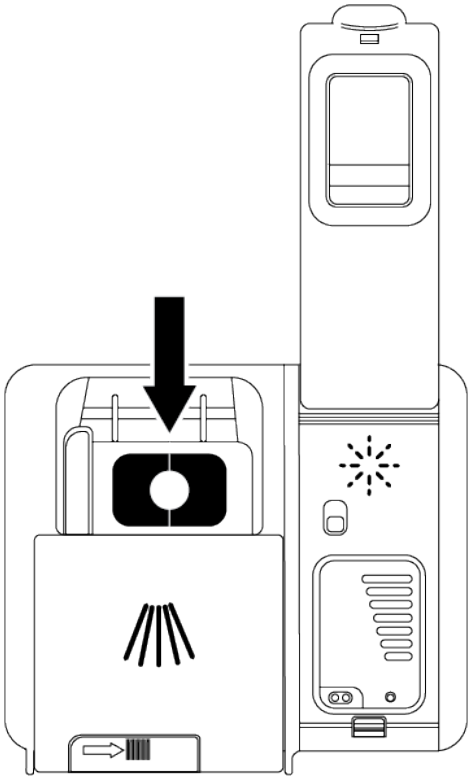

When using tablet detergents, follow the manufacturer's instructions on the detergent packaging.

When using tablet detergent, contact the detergent manufacturer if your dishes are wet when the wash cycle has finished and/or if you notice limescale stains, especially on glasses.

When you change from tablet detergent to powder detergent:

- Make sure the salt and rinse aid compartment is full.

- Set the water hardness setting to the highest position and run a wash cycle with the dishwasher empty.
- After the empty wash cycle, read the instruction manual and adjust the water hardness setting again according to your mains water.
- Set the appropriate rinse aid setting.

6.6 Rinse aid

The rinse aid used in dishwashers is a special compound to improve drying efficiency and to prevent traces of water or limescale from remaining on the washed items. For this reason, make sure that there is rinse aid in the rinse aid compartment and use only rinse aid that is intended for use in dishwashers.

Filling the rinse aid

1. Open the rinse aid cap with the latch.

1

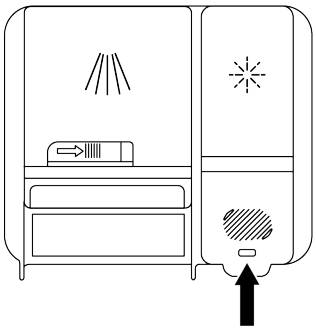

2. Fill the compartment to the MAX level.

2

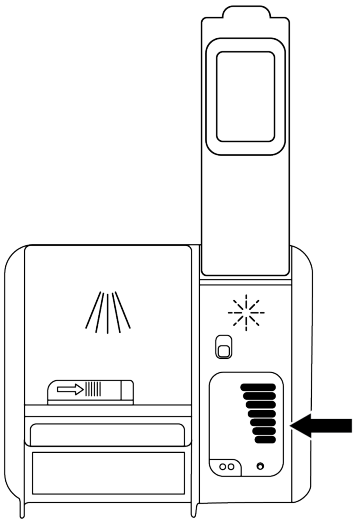

3. Close the compartment lid by pressing it lightly against point (B).

3

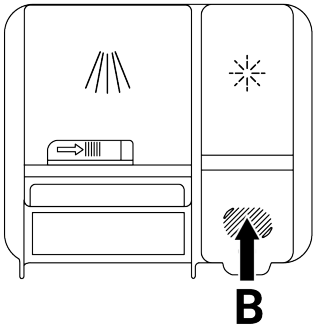

4. Increase the setting if water marks appear on the crockery after washing, or decrease it if a blue mark remains when wiped by hand. This setting is set to position 3 at the factory.

The rinse aid setting is described under the heading "Adjusting the rinse aid quantity" in the operation of dishwasher section.

Wipe off any rinse aid spilled outside the chamber. Accidental spillage of rinse aid will cause foaming and reduce washing performance.

6.7 Parts not suitable for washing in the dishwasher

- Do not wash dishes contaminated with cigarette ash, wax residue, varnish, paint, chemicals, etc. in the dishwasher.
- Do not wash forks, spoons and knives with wooden or bone handles, glued parts, non-heat-resistant plastic parts, copper and pewter utensils in the dishwasher.

As with hand washing, the dishwasher may discolour and tarnish decorative prints on porcelain, aluminium and silver. Some types of delicate glass and crystals may lose their transparency over time. We recommend that you pay particular attention to the fact that the new tableware you buy is appropriate for washing in the dishwasher.

6.8 Placing the dishes in the dishwasher

If you place the dishes correctly in accordance with the washing capacity of your dishwasher, you will make the best use of the dishwasher in terms of energy consumption, washing and drying performance.

- Remove any food residues (bones, fruit pits, etc.) from the dishes before placing them in the dishwasher.
- If possible, place thin, narrow-bodied items in the centre compartments of the baskets.
- Place very dirty and large items in the lower basket and small, delicate and light items in the upper basket.
- Place deep containers such as bowls, glasses and pots with their mouths downwards. This prevents water from accumulating in them.

To avoid possible injury, always place long and pointed dishes such as serving forks, bread knives, etc. in the cutlery basket with the pointed end downwards or horizontally on the dishwashing baskets.

Empty the dishes in the lower basket first, then the dishes in the upper basket.

Alternative Basket Layout Examples

Lower Basket

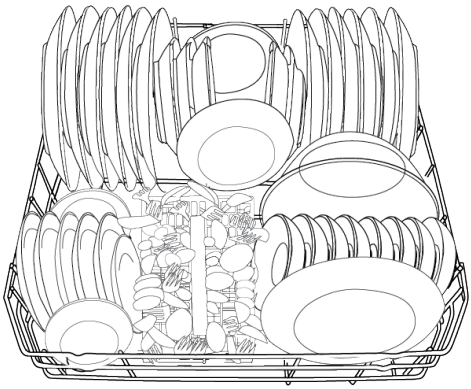

Upper Basket

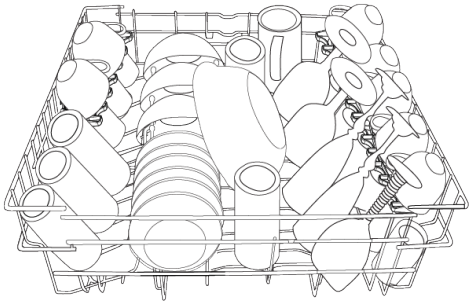

Incorrect Placements

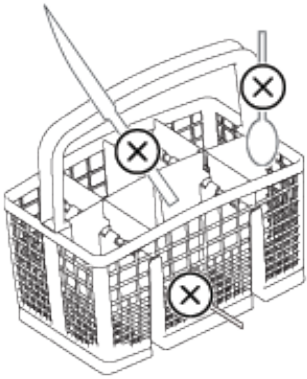

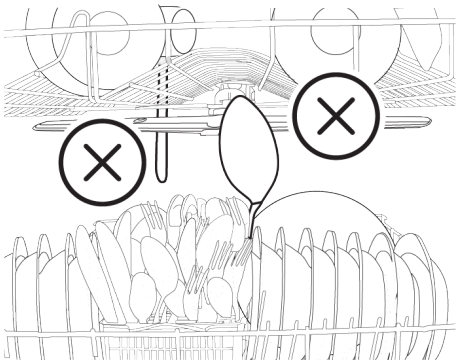

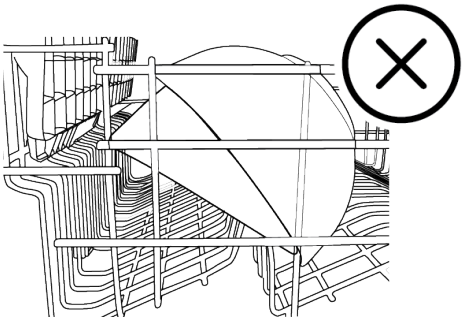

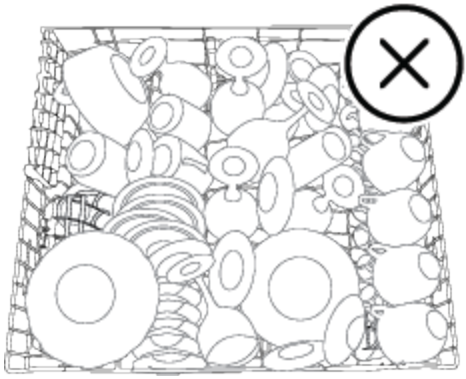

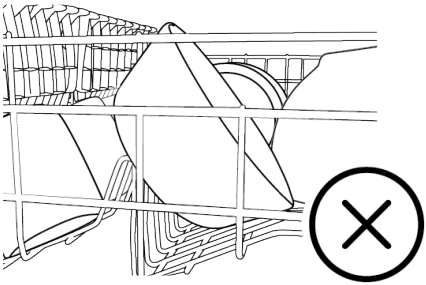

6.9 Lower Spray Arm

The lower spray arm washes the dishes in the lower basket.

6.10 Upper Spray Arm

The upper spray arm washes the dishes in the upper basket.

6.11 Cutlery basket

(depends on the model)
The cutlery basket is specially designed for cleaner washing of knives, forks, spoons, etc.

Thanks to the movable (A, B) feature of the cutlery basket, you can create wider areas when placing your dishes in the lower basket and open space for your dishes of different sizes.

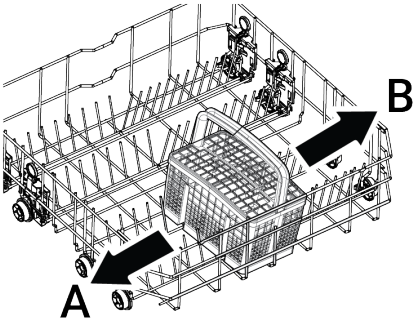

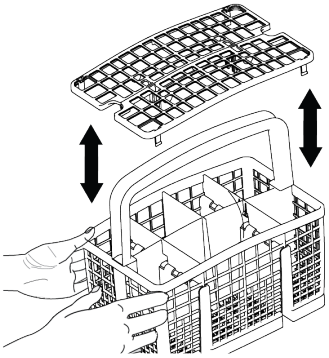

6.12 Cutlery basket

(depends on the model)
The cutlery basket is specially designed for cleaner washing of knives, forks, spoons, etc.
Thanks to the movable (A, B) feature of the cutlery basket, you can create wider areas when placing your dishes in the lower basket and open space for your dishes of different sizes. If you want to place more cutlery, you can fold the separators to the side. (C)

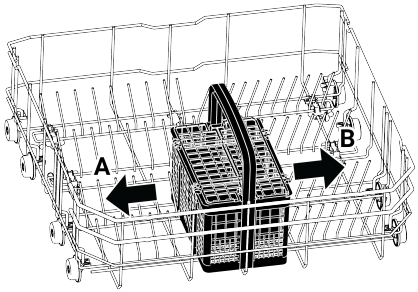

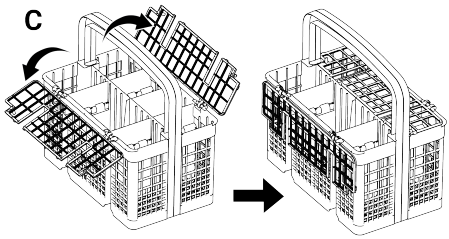

6.13 Foldable lower basket wires

(depends on the model)
The folding wires in the lower basket of the dishwasher, consisting of six parts (A), are designed for you to place large items such as pots, bowls, etc. more easily. If you want, you can create larger spaces by folding each piece individually or all together.

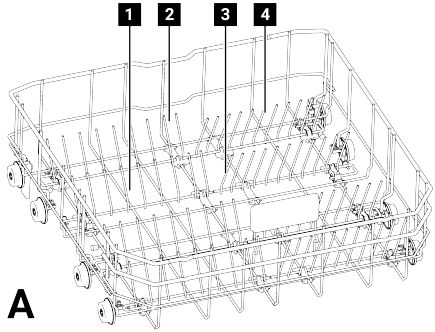

To fold the foldable wires into the lying position, push the wires in the direction of the arrows by holding them in the centre (B). Lift upwards to return the wires to the upright position. The foldable wires will snap back into the latch (C).

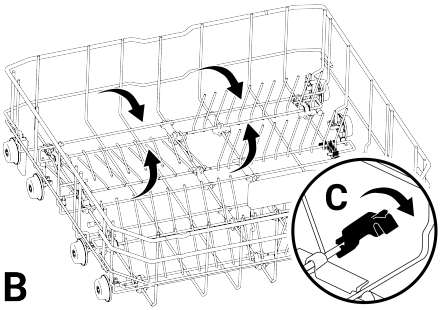

Bringing the wires to horizontal position by holding them from their ends may cause them to be bent. Therefore, grasp the centre wires by the bottom and push them in the direction of the arrow to bring them into a lying or upright position.

6.14 Lower basket multi-purpose / height-adjustable serving rack

(depends on the model)
Thanks to this accessory in the lower basket of your dishwasher, you can easily wash your extra glasses or pieces such as long ladles and bread knives.

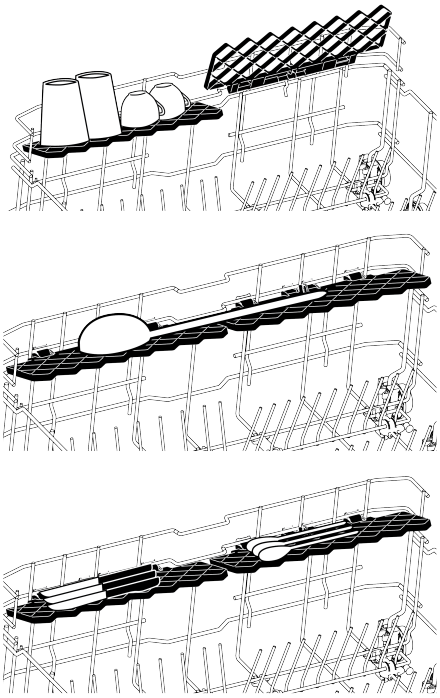

You can use the racks as you wish by positioning them up or down, or you can close them to create a large space in the lower basket.

Make sure that the spray arm does not hit the dishes placed on the racks

To return the racks to the closed position;
1. Fold the rack (A).
2. Slide the rack upwards (B).
3. Bring the rack to the upright position (C).
4. Slide the rack downwards and lock it with the tabs (D).

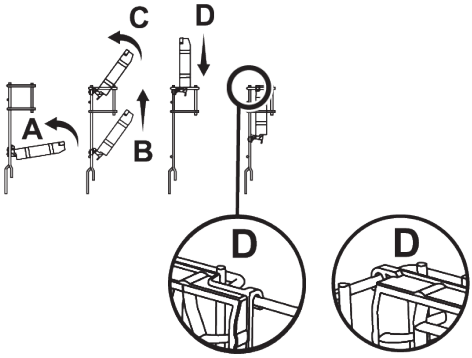

You can switch the rack to open position by doing the same operations in reverse.

To adjust the height of the racks:
1. Fold the rack (E).
2. Slide the rack upwards (F).

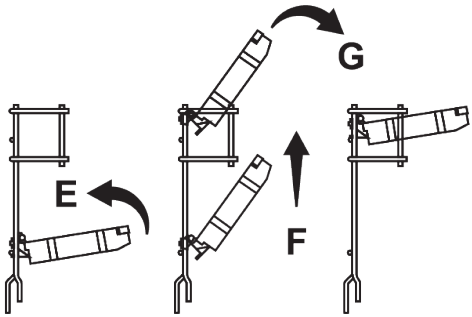

3. Open the rack to the desired level (G).

6.15 Height Adjustable Upper Basket Rack

(depends on the model)
You can use the upper and lower sides of the height-adjustable racks in the upper basket of the dishwasher as you wish by positioning them up or down according to the height of the dishes such as glasses, cups, etc. (A, B, C).

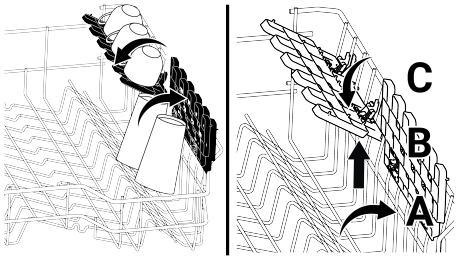

6.16 Lower basket with bottle wire

(depends on the model)
The bottle wire is designed to make it easier for you to wash wide-mouthed and high items. When not in use, you can remove the bottle wire from the basket by pulling it outwards from both sides (H).

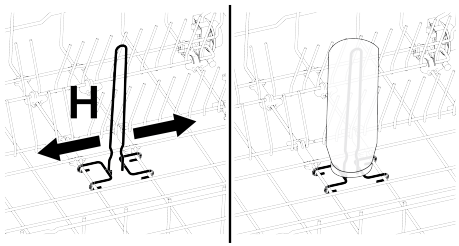

6.17 Upper basket multi-function service rack

(depends on the model)
Thanks to this accessory in the upper basket of your dishwasher, you can easily wash the pieces such as long ladles and bread knives.

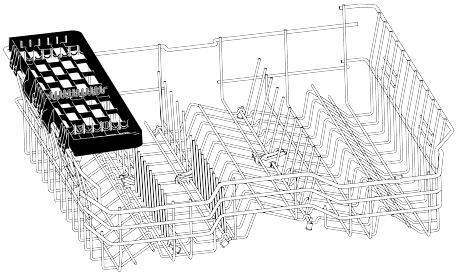

You may remove the upper basket multi-function service rack by lifting it upwards when you do not want to use it.

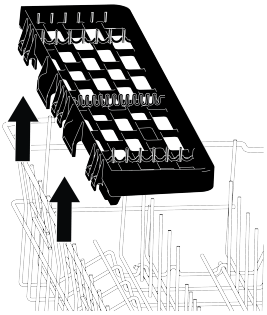

You may reinstall the upper basket multi-function service rack on the side of your upper basket easily to use it again.

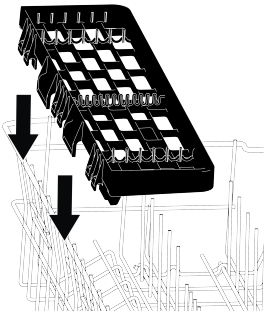

Illustration 2:

6.18 Upper basket multi-function service rack

(depends on the model)
Thanks to the upper basket multi-function service rack on the upper basket of your appliance, you may load and wash long service-ware and kitchen-ware easily. Also, the wineglass securing compartments available on the front side of this accessory allows easier placing of the stemware with proper sizes on the upper basket.

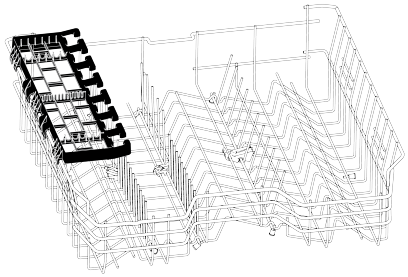

You may remove the upper basket multi-function service rack by lifting it upwards when you do not want to use it.

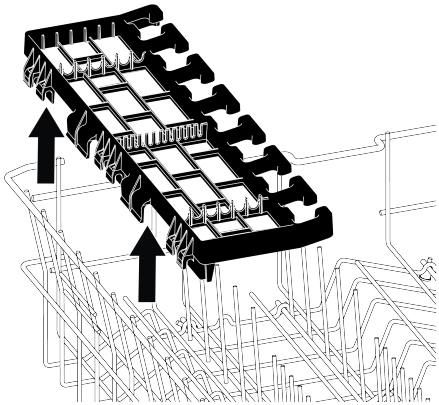

You may reinstall the upper basket multi-function service rack on the side of your upper basket easily to use it again.

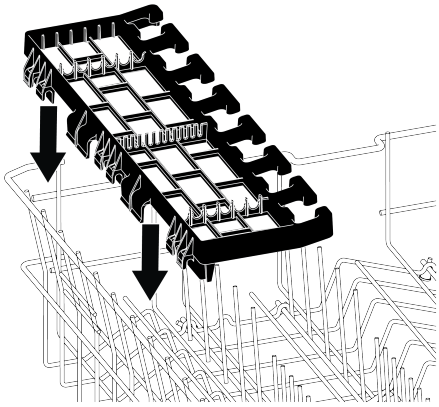

Illustration 3:

6.19 Adjusting the height of the upper basket

(depends on the model)
Upper basket height adjustment mechanism is designed so that you can create wide spaces on the upper or lower compartment of the dishwasher by adjusting the basket upwards or downwards either while it is empty or full.
Thanks to this mechanism, you may use your basket in three different positions, namely lower, centre or upper positions.

1. To raise the basket, hold the wires of the basket and pull the basket upwards with both hands while the basket is at the lowermost position (A)
2. Release the basket when the basket catches on to the next upper position with a “Click” that may be heard from the right and left mechanisms.

Repeat the same operation if the height is not adequate.

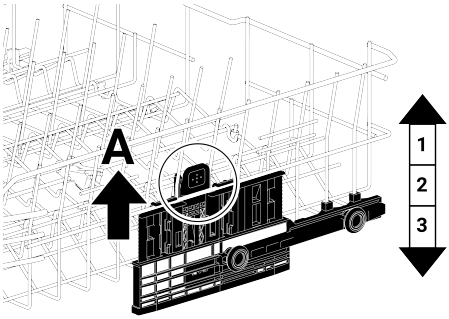

To lower the basket, perform the following while the basket is at uppermost position;

1. Holding the upper basket wires with both hands and lifting the basket slightly upwards, press and release the latches shown in the figure (B) at the same time.
2. Lower the basket to the next lower position.
3. Release the basket when it catches on to the next lower position.

Repeat the same operation if the height is not adequate.

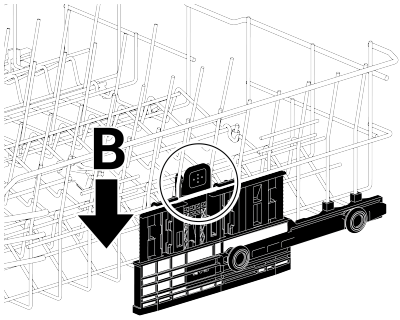

The movement mechanism may not work properly when the upper basket is overloaded or when the load is unbalanced. And it may fall to the next lower position in heavier conditions.

Ensure that the adjustment mechanisms on the right and left of the upper basket are aligned.

6.20 Adjusting the height of the upper basket

(depends on the model)
Upper basket height adjustment mechanism is designed so that you can create wide spaces on the upper or lower compartment of the dishwasher by adjusting the basket upwards or downwards either while it is empty or full.
Thanks to this mechanism, you may use your basket in three different positions, namely lower, center or upper positions.
To lower the basket, perform the following while the basket is at uppermost position;

1. Hold the wires of the upper basket and raise the handle of the mechanism upwards as shown in the figure (A).
2. Lower the basket to the next lower position.
3. Release the basket when it catches on to the next lower position.

Repeat the same operation if the height is not adequate.

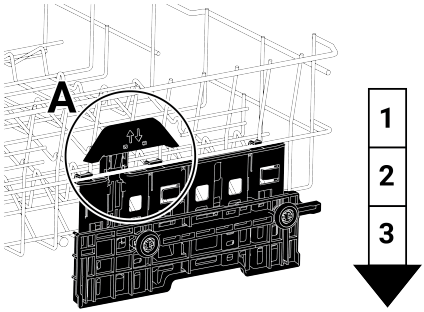

1. To raise the basket, hold the wires of the basket and pull the basket upwards with both hands while the basket is at the lowermost position (B)
2. Release the basket when it catches on to the next upper position with a “Click” that may be heard from the right and left mechanisms.

Repeat the same operation if the height is not adequate.

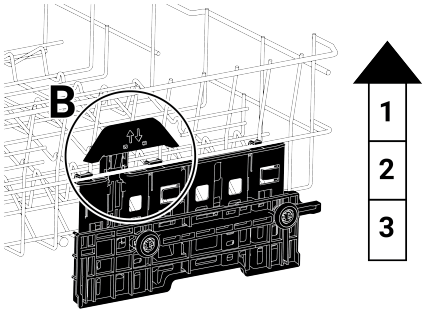

The movement mechanism may not work properly when the upper basket is overloaded or when the load is unbalanced. And it may fall to the next lower position in heavier conditions.

Ensure that the adjustment mechanisms on the right and left of the upper basket are aligned.

6.21 Adjusting the height of the upper basket

(depends on the model)

Place the large pieces, such as pots, to the lower basket. You can adjust the height of upper basket according to the size of your dishes. To adjust basket height; using the basket wheels, open the holders at the end of upper basket rails by rotating them to the side and remove the basket. Change the position of wheels, re-insert the basket to the rail and close the holders.

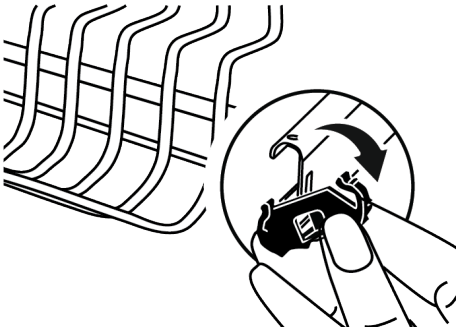

6.22 Tray Washing Support

(depends on the model)

You may use the tray washing supports if you want to wash a tray on your lower basket.

Refer to the Additional Functions section to select the proper cycle and function.

You may fold this part when it is not used to facilitate the placement of your dishes.

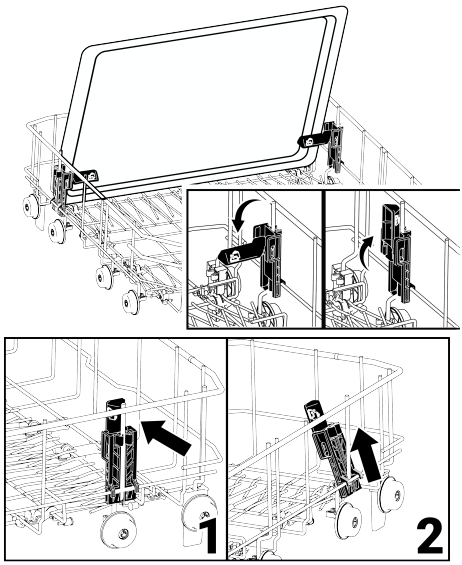

You may also remove the part when required as shown in figures 1 and 2.
The tray washing supports shall be removed as shown in figures 1 and 2 for performance inspection tests that shall be performed as per the standards.

6.23 Bottle and Dish Holder on the Lower Basket

(Depends on the Model)
The lower basket bottle and plate holder (A) is designed to make it easier to wash narrow-mouthed and high dishes. After bringing the foldable wires to horizontal position, you may place your bottles on the bottle holders. Secure your bottles by clamping them with the bottle holder clip as shown in the figure below.

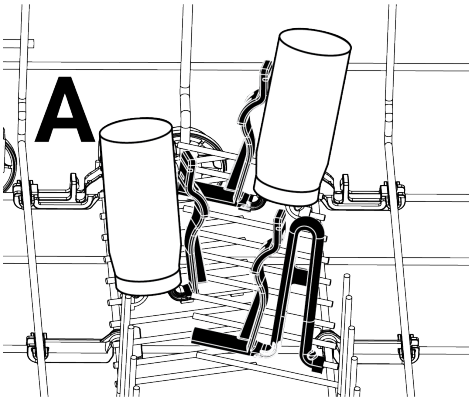

And when you bring the foldable wire to vertical position, you may place your dishes without removing the holders.

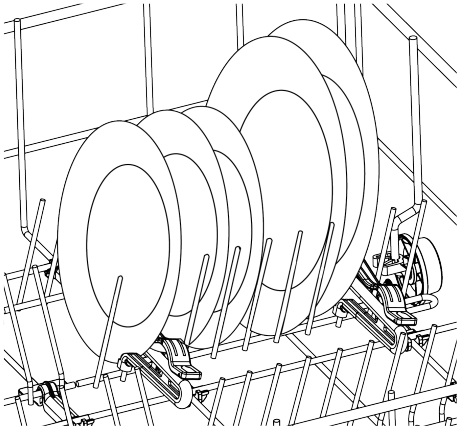

Bringing the wires to horizontal position by holding them from their ends may cause them to be bent. Thus, it is advisable to bring the wires to horizontal or vertical position by holding them from their bottom.

6.24 Foldable upper basket wires

(depends on the model)
You can use the folding wires when you need more space in the upper basket of the dishwasher for your large dishes.
To fold the foldable wires into the lying position, hold the wires in the centre and push them in the direction of the arrow in the pic-

ture. Place your large dishes in the space created. Lift up to return the wires to the upright position.

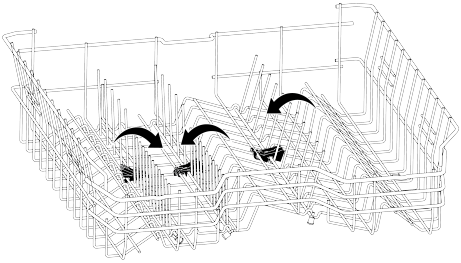

Bringing the wires to horizontal position by holding them from their ends may cause them to be bent. Therefore, grasp the centre wires by the bottom and push them in the direction of the arrow to bring them into a lying or upright position.

6.25 Cutlery basket

(depends on the model)
The ceiling cutlery basket is designed for washing your forks, spoons, etc. by placing them between the combs on the tray.

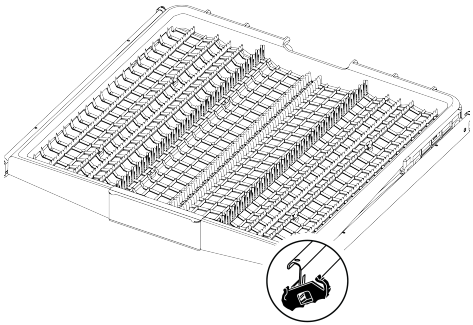

6.26 Cutlery basket

(depends on the model)
The ceiling cutlery basket is designed for washing your forks, spoons, etc. by placing them between the combs on the tray.

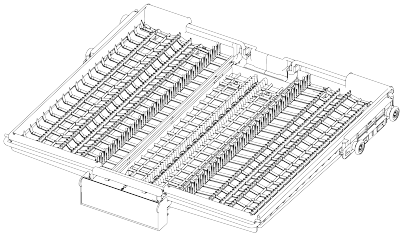

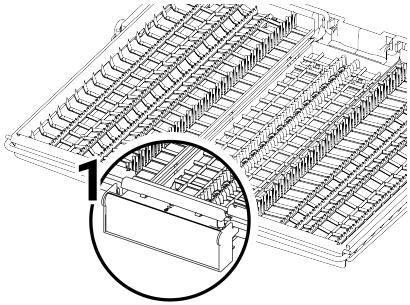

In the models with partial movement feature, when the arm (1) on the handle is pushed, the tray on the middle part of basket goes down to the lower position; system is unlocked and the right and left side trays can be freely moved.
The free area established by moving the side trays allows loading long dishes to the upper basket.

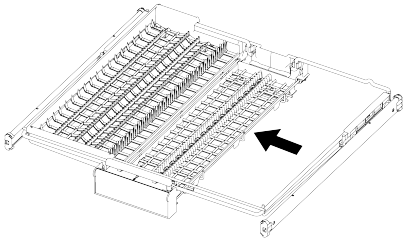

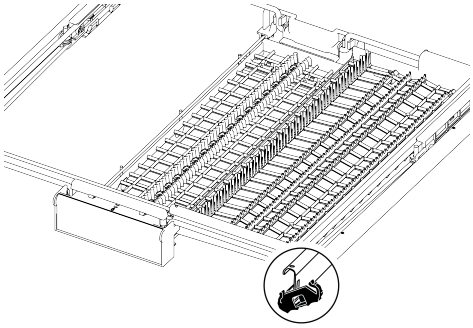

When the middle tray is in the lower position, it is possible to place long dishes such as coffee cups, ladles etc. on the tray. When the side trays are leaned to both sides, it is possible to pull the handle and ensure rising the middle tray and locking the system.

7 Operation of the Product

7.1 Operation of the Product

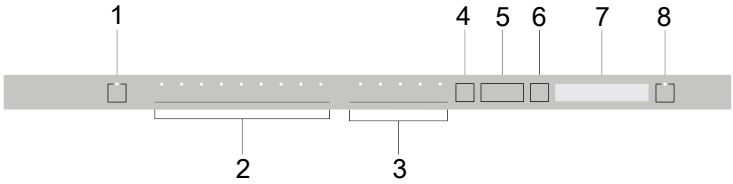

1 On/Off Button
2 Program Selection keys
3 Function Selection Buttons
4 Menu Button
5 Select Delay Time / Select Menu Direction Keys
6 Select / Confirm Key
7 Display
8 Start / Pause / Cancel Key

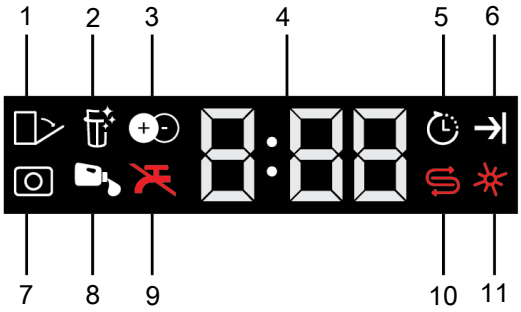

1 Auto Door Opening (depends on the model)
2 Filter Cleaning Indicator (depends on the model)
3 Additional Function Indicator (depends on the model / Heat pump warning)
4 Delay Time / Cycle Time Indicator
5 Delay Indicator
6 Cycle Ended Indicator
7 Tablet Detergent Indicator (depends on the model)
8 Automatic Liquid/Gel Detergent Dosage Indicator (depends on the model)
9 Water Outage Warning Indicator
10 Low Salt Warning Indicator
11 Low Rinse Aid Warning Indicator

Read the chapter "Safety Warnings" first!

When you press the Power on/off button, in the ON position the screen indicators lights turn on. In the off position, they turn off.

Cycle Selection / Cancel Cycle Key

Select the cycle that you want to run from the "cycle selection keys" and press the key. To cancel the running cycle, open the dishwasher door and press the Cycle Start / Pause / Cancel button for 3 seconds. The display shows 0:01 after the countdown of 3 - 2 - 1, close the dishwasher door and wait for the drain process to complete. Discarding process will be completed within 2 minutes and your dishwasher will beep when it is done.

Function Buttons

When the Function Buttons are pressed during programme selection or delay selection, if the programme you selected supports the function you have selected, a positive button warning sound will be heard. When the indicator for the selected function is lit, this means the function has been selected. To cancel function selection, press and hold the function button again until the function indicator turns off.

Preparing the dishwasher

1.Open the door of the dishwasher.
2.Load your dishes as described in the user manual.
3.Ensure that lower and upper spray arms are rotating freely.
4.Add adequate amount of detergent in the detergent compartment.

Cycle selection

1.Turn your dishwasher on by pressing the On / Off key.

2. Check the low salt and low rinse aid indicators and add salt and/or rinse aid if required.

3. Select the correct washing cycle for your dishes considering the Cycle Information and Average Consumption Values Table.

4.The selected cycle starts when you close the door of your dishwasher.

7.2 Program Information and Average Consumption Values Table

Programme Data and Average Consumption Values Table									
Programme number	0	1	2	3	4	5	6	7	8
Programme name	-	Auto	AquaFlex	Intensive	Eco *	Delicate	Quick&Shine (#)	Mini (#)	Prewash
Cleaning temperature	-	40-65 ºC	-	70 ºC	50 ºC	40 ºC	60 ºC	35 ºC	-
Degree of Soiling	-	Determines the soiling degree of the dishes and sets the temperature and amount of the washing water as well as the washing time automatically. Suitable for all types of dishes.	It is the most suitable washing programme for daily mixed dishes including plastic items. While delicate glass items are washed in the upper basket, pans and trays can be washed in the lower basket.	Suitable for heavily soiled dishes, pots and pans.	Suitable for washing dishes with normal amount of soil. It is the most efficient program in terms of combined power and water consumption. This is used for assessing the compliance with EU's eco-design directive.	Special programme for gentle cleaning of delicate glassware.	Daily washing programme for normally soiled dishes in the fastest way.	Suitable for lightly soiled daily dishes that are scraped or pre-cleaned.	Suitable for removing the remnants on the soiled dishes that will be kept waiting in the machine for a few days, and thus, for preventing the bad odour buildup.
	-	Medium to high	Medium	High	Medium	Low	Medium	Low	-
Prewash	-	+	+	+	-	+	-	-	+
Wash	-	+	+	+	+	+	+	+	-
Dry	-	+	+	+	+	+	+	+	+
Duration (min)	-	110-198	219	187	260	120	58	30	15
Water (l)	-	9,4-12,4	19,00	16,80	9,50	14,40	10,60	10,80	4,00
Energy (kWh)	-	0,90-1,45	1,53	1,51	0,645	0,92	1,18	0,8	-
Selectable functions	-	T, E, R, Z, H, M, K	T, E, Y, F, Z, H, M, K	T, E, Y, F, R, U, Z, H, M, K	T, E, Y, F, S, R, U, Z, H, M, K	T, E, Y, F, R, B, M, K	T, E, G, R, B, H, M,K	T, E, B, M,K	-

Loading Capacity: 14

The consumption values shown in the table were determined under standard conditions. Differences may therefore occur under practical conditions. * Reference programme for testing institutes. The tests in accordance with EN 50242/60436 must be carried out with a full water softener salt dispenser and a full rinse aid reservoir, and using the test programme. The values given for programmes other than Eco 50°C programme are indicative only. (#) Additional functions might cause changes in programme durations.

7.3 Additional functions

The dishwasher's cycles are designed to deliver the best cleaning performance by considering the type and amount of dirt and the properties of the dishes to be washed. Additional functions have been added to help you save time, water and energy, and for a more convenient and hygienic wash with its customisable settings.

Additional functions may alter the duration of the selected cycle.

Additional functions are not available for all programs. A function's indicator will not show if is not available for the programme.

Functions that can be used in washing programmes are shown with letters such as 'A, B,D,E,G,F,K...' in the 'Cycle Information and Average Consumption Values Table'. You can find instructions on the use of these functions in the 'Additional functions' section of the user manual.

Some auxiliary functions cannot be used together. If the function you have selected does not show even though it appears in the "Cycle Information And Average Consumption Values Table", you can activate it after switching off other auxiliary functions.

To add additional functions to the cycle:

1. Select the desired washing programme.
2. When you select an additional function, the indicator for the additional function will light up. When you press the function button again, the indicator goes out and the selection is cancelled.

If your dishwasher has sub-menu functions depending on the model, see the instructions in the additional functions section for their use.

Not all of the functions indicated with letters such as "A,B,D,E,G,F,K..." in the Cycle Information and Average Consumption Values Table can be used in your dishwasher; the functions that can be used in your dishwasher are explained in the additional functions section of this manual.

Self Dry Function (K)

(Depends on the Model)

Feature of your dishwasher "Self Dry " increases drying efficiency of your dishwasher and saves energy.

When you activate this function, the door of your dishwasher opens automatically at the end of the washing program.

This function can extend the duration of the selected programme by up to 35 minutes.

This function can extend the duration of the selected programme by up to 35 minutes.

TheSelf Dry feature uses 'door opening rods' to open the door of the dishwasher at the end of the washing circle. This process takes approximately 2 minutes. If the power fails while the rods are moving out, do not force the door closed. The process will complete when the power returns, and the rods will return to their initial position.

If theSelf Dry feature is active, the door opens automatically during the drying step and the cycle flow can continue. If the product has a screen, the countdown continues on the screen with the door open until the drying process is completed and the cycle ends.

Self Dry To change the setting:

1.After turning on your dishwasher, press the Menu button for 3 seconds.

In some models, you just need to press the menu key 1 time to access the settings menu.

2.With the <- and +> buttons, it comes to “o:” press the key.
3.Select one of the o:0 or o:1 positions with the Selection button. At “0” position, the Self Dry feature is turned off “o:. At “o:1” position, it is active.

The indication of your dishwasher Self Dry can be done with the letter "o" or the door opening icon depending on its model.

4.Exit from the settings menu by pressing menu button. Your settings are saved automatically.

7.4 Functions

SteamGloss function (E)
(Depending on the model)
This function enhances drying performance. It may extend the program duration up to 30 minutes.

SilentWash Function (S)
(model dependent)
SilentWash function is valid for 3 programs.
1.Eco
2.Auto
3.Intensive
When these programs are run with silentwash, the sound level decreases by 2 DBA and the washing time is extended up to 68 minutes.

TrayWash Function (U)
(model dependent)
For this function to work, select the Intensive 70°C program and press the function button.

Fast+ function (F)
(model dependent)

It allows the selected program to wash at higher pressure and temperature, shortening the washing time and reducing the amount of water.

Light reflection on the floor (Machine washing warning)
(Depending on the model)
Your machine projects light on the floor during the wash cycle. The light turns off when the wash cycle is complete.

When the washing program starts, the light reflection on the floor is automatically activated and illuminated until the end of the program.

Light reflection on the ground is not a feature that can be canceled by the user.

For fully built-in models, the door must be installed at a minimum height of 40 mm above the floor to ensure that the "Machine washing warning" is properly visible.

7.5 Functions Under the Settings Menu

(depends on the model)
Additional functions under your dishwasher’s settings menu depend on the model. Press and hold the Menu key for 3 seconds to access these functions. Select the function or setting you want to make changes on with the <- and +> keys.

In some models, you just need to press the menu key 1 time to access the settings menu.

Change the function or setting you want to make a change on with the selection key and turn off the dishwasher to save the settings.

Sub Menu Functions:
(depends on the model)
Self Dry Function Off/On



Tablet Detergent Function Off / On:



Additional Function Off / On:
(depends on the model)



7.6 Changing the Warning Tone Level

1.After turning on your dishwasher, press the Menu button for 3 seconds.

In some models, you just need to press the menu key 1 time to access the settings menu.

2.Press the <- and +> buttons to move to the "S:" on the display.
3.Each time you press the selection key, the warning volume changes to "S:0" off, "S:1" medium, "S:2" high.
4.Turn off your dishwasher with On / Off button to save.

Your dishwasher is set to "S:2" at the factory.

7.7 Programming the Washing Time

Delaying

If economy billing schedule is applied for power in your region, you may use the delay function to wash your dishes at the relevant times.
You may delay the start time of the cycle you have selected up to 24 hours.
1.Press the delay key after selecting the washing programme and any other additional functions.
2.When you press the delay key, “0:30” is displayed on the Screen Info Line and Delay indicator starts to flash.
3.Set the desired period by pressing the delay key. Each time you press the button, the time increases in 30 minute increments up to 6 hours and then in 1 hour increments up to 24 hours.
4.Close the door of your dishwasher after the delay. Cycle shall start automatically when the delay period is over.

Changing the settings while the delay function is active

You cannot make changes to the washing cycle, additional functions, or to the delay period while the delay function is active.

It is not possible to set/change the cycle and auxiliary functions after the start of the cycle.

To cancel the delay function

Open the dishwasher door and press Select Cycle / Cancel Cycle button for three seconds. After the 3 - 2 - 1 countdown, the display will show 0:01, close the door of the dishwasher and wait until the draining process is completed. Discarding process will be completed within 2 minutes and your dishwasher will beep when it is done.

The delay function cannot be set after the cycle has started.

7.8 Starting the Cycle

Close the door of your dishwasher to start your dishwasher after selecting the programme and additional functions.

Dishwasher softens the water as per the hardness of the mains water. The washing cycle time may also change while the cycle is being executed as a result of the room temperature, mains water temperature and the amount of dishes.

Pay attention to avoid opening of the door while the dishwasher is being operated. Be careful as steam may come out when you open the door of the dishwasher.

To ensure that the water remaining on the dishes and inside the dishwasher is completely drained and that the water softener is removed after rinsing operation, it resumes operation at drying cycle after keeping silent for a while.

7.9 Cancelling the Cycle

Open the dishwasher door and press Select Cycle / Cancel Cycle button for three seconds. After the 3 - 2 - 1 countdown, the display will show 0:01, close the door of the dishwasher and wait until the draining process is completed. Discarding process will be completed within 2 minutes and your dishwasher will beep when it is done.

Detergent or rinse aid may remain inside the dishwasher and/or the dishes being washed as per the step of the program you have cancelled.

7.10 Low Salt Warning Indicator

Check the low salt indicator on the screen of your dishwasher to see if you have softening salt in your dishwasher. Add salt to the salt reservoir when the low salt indicator on the display comes on.

The Water Softening System section describes how to set the water hardness level.

7.11 Low Rinse Aid Warning Indicator

Check the low rinse aid indicator on the screen of your dishwasher to see in you have enough rinse aid in your dishwasher. Add rinse aid to the rinse aid reservoir when the low salt indicator on the display comes on.

7.12 Setting the Rinse Aid Amount

1.After turning on your dishwasher, press the Menu button for 3 seconds.

In some models, you just need to press the menu key 1 time to access the settings menu.

2.With the <- and +> buttons, it comes to “P:” on the display.

3.Set to a proper level with the Select key.

4.Turn off your dishwasher with On / Off button to save.

Applies no rinse aid in P:0 position during washing programme.

Applies 1 dose of rinse aid in the P:1 position.

Applies 2 dose of rinse aid in the P:2 position.

Applies 3 dose of rinse aid in the P:3 position.

Applies 4 dose of rinse aid in the P:4 position.

7.13 End of programme

When the programme you have selected ends, an audible warning will alert you to switch off the dishwasher.

This audible warning is repeated at regular intervals until your dishwasher switches off.

Programme End indicator illuminates when the washing programme has ended.

1.Open the cover of the dishwasher.

2.Press the On/Off key to switch off your dishwasher

3.Switch off the tap.

4.Unplug the dishwasher from the socket.

To save energy, the dishwasher switches off automatically at the end of the programme or if the programme is not started.

After washing, leave the dishes in the dishwasher for about 15 minutes to cool down. Your dishes shall dry faster if you half close the cover of your dishwasher within this period. This shall improve the drying efficiency of the dishwasher.

8 Maintenance and Cleaning

8.1 Maintenance and cleaning

Read “Safety Instructions” section first!

Before cleaning the machine, unplug it and turn off the tap.

Do not use abrasive materials when cleaning.

For the machine to work efficiently, clean the filters and impellers at least once a week.

If cleaned at regular intervals, the life of the product will be extended and frequently encountered problems will be reduced.

Cleaning the exterior of the machine

Gently wipe the exterior of your machine and the door seals with a delicate cleaning agent and a damp cloth. Wipe the "control panel" only with a slightly damp cloth.

Cleaning the inside of the machine

Clean the machine monthly by running it at the highest possible temperature with detergent or special machine cleaning agents. This will help to remove residues and limescale from the inside of the machine.

If there is water left in the machine, drain the water in the machine by following the procedures in the “Cancelling the program” section. If the water cannot be drained, remove the filters as indicated in the “Cleaning the filters” section and check if there are any dirt particles that have accumulated at the bottom of the machine and blocked the water path, and clean them if necessary.

8.2 Cleaning the filters

(Depending on Model)

For the machine to work efficiently, clean the filters at least once a week. Check if there is any food residue on the filters. If there is food residue, remove the filters and clean them thoroughly under the tap.

1. Remove the micro filter and coarse filter group by turning it counterclockwise and pulling it out.

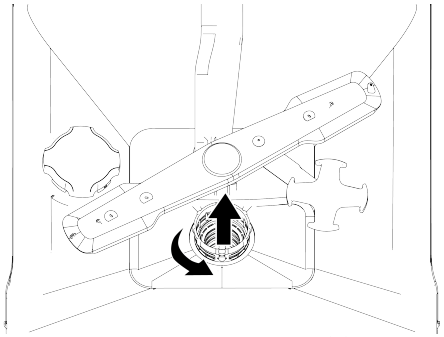

2. Pull the metal/plastic filter (3) out of its place.

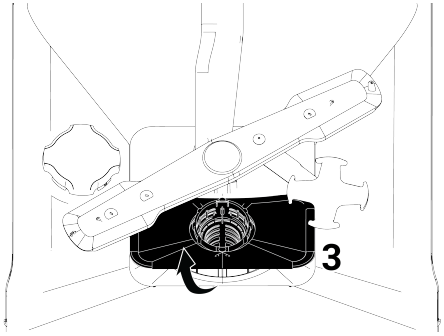

3. Press the two tabs on the coarse filter inwards to separate the coarse filter from the assembly.

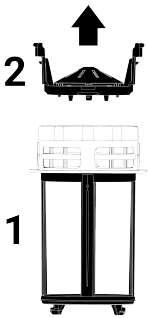

4. Clean all three filters under the tap with a brush.
5. Replace the metal/plastic filter.
6. Place the coarse filter into the micro filter. Make sure it is properly seated. Turn clockwise until you hear a click.

The machine should not be used without a filter.

Failure to install the filters correctly will reduce washing effectiveness.

8.3 Cleaning the hose filter

The filter on the water inlet hose prevents dirt (sand, clay, rust, etc.) that may come from the city network or your water system from damaging the machine. Check the filter and hose from time to time and clean them if necessary.

1. Turn off the tap and remove the hose.
2. After removing the filter from the hose, clean it under the tap.
3. Place the cleaned filter back into its place inside the hose.
4. Attach the hose to the faucet.

(Model dependent)

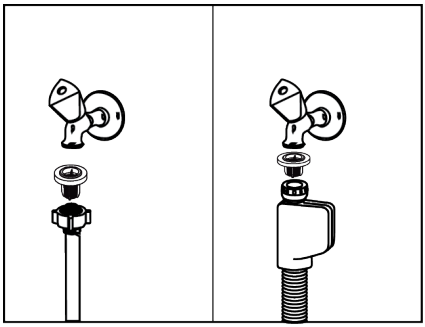

8.4 Cleaning the propellers

Clean the impellers at least once a week to ensure efficient operation of the machine.

Lower propeller

Check if the lower impeller (1) holes are clogged. If there is a blockage, remove the impeller and clean it. You can remove the lower impeller by pulling it upwards (depending on the model)

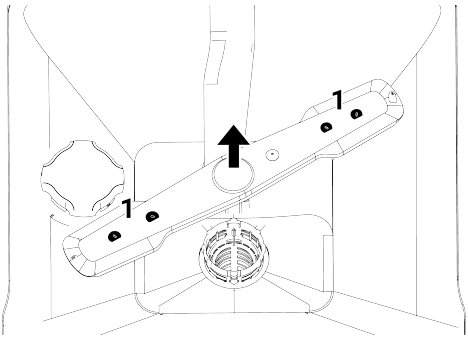

Check if the holes of the impeller assembly are clogged. If there is a blockage, remove the impeller assembly and clean it. (Depending on the model)

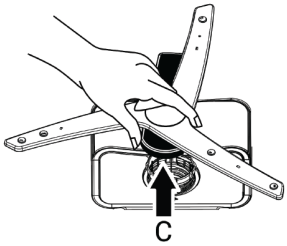

To remove and clean the lower propeller group, hold it with one hand from the points (C) shown in the figure and pull it upwards. After cleaning, reattach the propeller group by following the same steps in reverse. (Depending on the model)

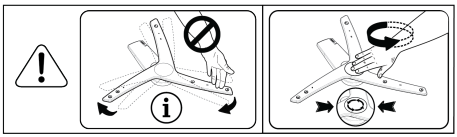

Do not attempt to turn the propeller by holding the ends. Trying to turn it by the ends may cause the gear system inside the propeller to break.

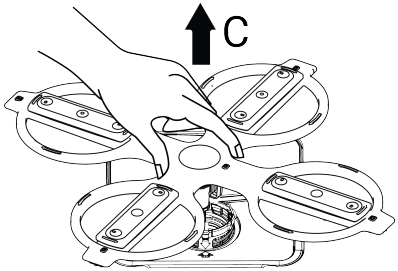

To remove and clean the lower propeller group, hold it with one hand from the points (C) shown in the figure and pull it upwards. After cleaning, reattach the propeller group by following the same steps in reverse. (Depending on the model)

Upper propeller

Check if the upper impeller (1) holes are clogged. If there is a blockage, remove the impeller and clean it. You can remove the upper impeller by turning its nut to the left. When reattaching the upper propeller, be sure to tighten the nut fully.

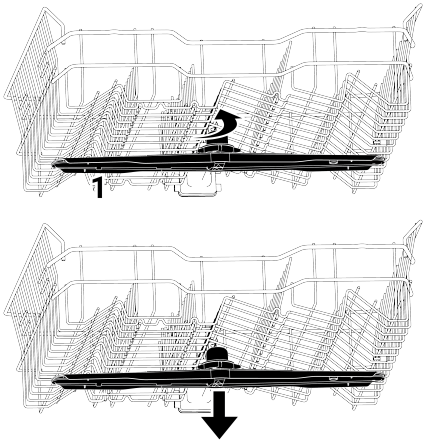

9 Troubleshooting

9.1 Error Codes, Causes and Solutions

Error Code	Cause	Solution
E01 Warning P1 Blinks Power led flashes	Chassis water filling fault	1-Error algorithm is activated. 2-Cycle ends. If you see the error continuously, 1-Cut off the electricity. 2-Close the valve. 3-Get in touch with the authorized service.
E02 Warning P2 Blinks The Water outage icon illuminates. The Washing led illuminates.	Water outage error	Check the water supply.
	Filter is blocked	1-Cut off the electricity connection. 2-Cut off the water connection. 3-Remove water inlet hose. 4-Check and clean the filter. 5-Establish the water connection. 6-Establish the electricity connection.
	Other	If the error continues, 1-Close your dishwasher. 2-Get in touch with the authorized service.
E06 Warning P2 flashes P6 flashes	Temperature sensor in the dishwasher is faulty	If you see this error continuously and washing performance has reduced, 1-Close your dishwasher. 2-Get in touch with the authorized service.
E07 Warning P2 flashes F1 and F2 flashes	Flowmeter is faulty	1-Error algorithm is activated. 2-Cycle ends. If you see the error continuously, 1-Cut off the electricity. 2-Close the valve. 3-Get in touch with the authorized service.

The error codes can change depend the model.

9.2 Troubleshooting

Machine does not work.

- The mains plug may not be plugged in. >>> Check that the mains plug is plugged in.
- The fuse may have blown. >>> Check the fuses in your house.
- Water may not be coming out. >>> Make sure that the water inlet tap is open.

- The dishwasher door may be open. >>> Make sure that the dishwasher door is closed.
- "On/Off button" may not have been pressed. >>> Make sure to switch on the dishwasher by pressing the "On/Off button".

Dishes are not cleanly washed

- Dishes are placed irregularly. >>> Place the dishes as specified in the user manual.
- The proper cycle is not selected. >>> Select a cycle with a higher temperature and washing for a longer time.
- Dishes are very dirty >>> Remove the coarse dirt of your dishes with a napkin and then place them into your dishwasher.
- Spray arms are stuck. >>> Before starting the cycle, make sure that the upper and lower spray arms rotate freely by rotating them with your hand.
- The holes of the spray arms are clogged. >>> Upper or lower holes of the spray arms may be clogged with food residues such as lemon seeds. Clean the spray arms regularly as shown in the Section "Cleaning and maintenance."
- Filters are clogged. >>> Check whether the filter system is cleaned. Clean the filter system regularly as shown in the "Cleaning and maintenance" section.
- Filters are not installed correctly. >>> Inspect the filter system and make sure that it is installed correctly.
- Baskets are overloaded. >>> Do not load baskets above their capacity.
- Detergent is stored under improper conditions. >>> If you are using a powder detergent, do not store the detergent package in humid environments. If possible, store the detergent in a storage container with a lid. We recommend you to use tablet detergent for easy storage.
- Adequate amount of detergent is not added. >>> If you are using a powder detergent, put the amount of detergent suitable for the soil level of your dishes and for the definitions of the cycles. We recommend using tablet detergents to achieve the best results.
- Insufficient amount of rinse aid. >>> Inspect the low rinse aid warning indicator and add rinse aid, if required. If adequate amount of rinse aid is available in the dishwasher, increase the setting for rinse aid.
- Detergent compartment cover is not closed. >>> Always close the cover of the detergent compartment after adding detergent.

Dishes are not dried

- Dishes are placed irregularly. >>> Place your dishes so that water shall not collect inside them during washing.
- Insufficient amount of rinse aid. >>> Inspect the low rinse aid warning indicator and add rinse aid, if required. If adequate amount of rinse aid is available in the dishwasher, increase the setting for rinse aid.
- Machine is unloaded right after the end of washing cycle. >>> Do not unload your dishwasher right after the end of washing cycle. Keep the door ajar and let the steam come out for some time and unload the dishwasher when the dishes are cooled so that they are OK to be contacted by hand. Start the unloading operation from the lower basket. Thus, the water remaining on any dish on the upper basket is prevented from dripping on the dishes on the lower basket.
- The proper cycle is not selected. >>> Drying performance is low as the rinsing temperature is also low in short cycles. For a higher drying performance, select longer cycles.
- Tablet detergent is used, and tablet button is not pressed >>> If your dishwasher has a "tablet detergent" function, activate it while using multi-purpose detergents.
- Surface quality of the kitchenware is poor. >>> You may achieve the expected washing performance on kitchenware with damaged surfaces, and the use of such kitchenware is not correct in terms

of hygiene. Moreover, it is difficult for water to flow over damaged surfaces. It is not recommended to wash such kitchenware in the dishwasher.
- It is natural to have concerns about drying for Teflon kitchenware. This condition is a result of the structure of Teflon. As the surface tensions of Teflon and water are different, water particles remain like beads on the Teflon surface.

Tea, coffee or lipstick stains are left on the dishes.

- The proper cycle is not selected. >>> Select a cycle with a higher temperature and washing for a longer time.
- Surface quality of the kitchenware is poor. >>> When tea, coffee stains and other stains caused by dyeing materials penetrate the damaged surfaces, it is not possible to remove such stains dishwashers. You may achieve the expected washing performance on kitchenware with damaged surfaces, and the use of such kitchenware is not correct in terms of hygiene. It is not recommended to wash such kitchenware in the dishwasher.
- Detergent is stored under improper conditions. >>> If you are using a powder detergent, do not store the detergent package in humid environments. If possible, store the detergent in a storage container with a lid. We recommend you to use tablet detergent for easy storage.

Lime stains remain on dishes and glassware looks blurred

- Insufficient amount of rinse aid. >>> Inspect the low rinse aid warning indicator and add rinse aid, if required. If adequate amount of rinse aid is available in the dishwasher, increase the setting for rinse aid.
- Water hardness setting is low or salt level is inadequate. >>> Check the water hardness setting by measuring the hardness of the mains water accurately.
- There is a leak of salt. >>> Take care not to pour salt around the filler opening while adding salt. Ensure that the water softener lid is closed after adding salt. Clean the salt spilt into the dishwasher by running the pre-wash cycle. Check the lid once more at the end of the cycle, as the salt particles remaining under the lid will dissolve in the pre-wash step, and thus the lid may loosen.

There is a different smell inside the dishwasher

- New machines have a certain smell. This smell shall disappear after a few washing cycles.
- Filters are clogged. >>> Check whether the filter system is cleaned. Clean the filter system regularly as shown in the "Cleaning and maintenance" section.
- Chemicals that may cause odour are put inside the rinse aid reservoir. >>> Do not use chemicals such as vinegar, hand washing detergents, and descaling agents.
- Soiled dishes were kept in the dishwasher for 2-3 days. >>> If you shall start the dishwasher immediately after putting the dishes into the dishwasher, remove the soil on the dishes and run the Pre-Wash cycle without detergent every two days. Do not close the door of the dishwasher completely to prevent occurrence of odour inside the dishwasher in such cases. You may also use commercially available deodorizing and dishwasher cleaning agents.

Rust stains, tarnishing, surface deterioration on the dishes

- There is a leak of salt. >>> Salt may cause deterioration and corrosion on metal surfaces. Take care not to pour salt around the filler opening while adding salt. Ensure that the water softener lid is closed after adding salt. Clean the salt spilt into the dishwasher by running the pre-wash cycle. Check the lid once more at the end of the cycle, as the

salt particles remaining under the lid will dissolve in the pre-wash step, and thus the lid may loosen.

- Salty food residues have remained on the dishes for a long period of time. >>> If kitchenware soiled with such foods are to be kept in the dishwasher, the soil shall be removed from the surface of the dish by the pre-washing cycle or the dishes shall be washed without waiting.
- There is no earth line in the electrical installation. >>> Check if your dishwasher is connected to a true earth line. Otherwise, the static electricity generated in the dishwasher causes arcs and pits on the surface of the metal objects, removing the protective layer on the surface, and cause tarnishing of the surface.
- Intensive cleaning agents such as bleach are used. >>> The protective layer on metal surfaces gets damaged when it comes into contact with cleaning agents such as bleach, and thus loses its effect over time. Do not wash your dishes with bleach. If you want to wash your dishes using bleach, your dishwasher shall have a special equipment and a function that allows washing with bleach. With this equipment and function, the appropriate amount of bleach shall be taken into the washing environment in the right step, then we may benefit from its hygienic effect and rinse the dishes in the best way.
- Metal items, such as knives in particular, were used outside of their intended use. >>> If the knives are used for purposes such as opening the cans, the protective layer on their ends shall be damaged. Do not use metal kitchenware outside of their intended use.
- Cutlery are made of low quality stainless steel. >>> It is inevitable that such items will rust, thus they shall not be washed in the dishwashers.
- Previously rusted kitchenware are washed in the dishwasher. >>> Rust on a corroded item may migrate to other stainless steel surfaces during washing and cause rust to appear on those surfaces, too. Such items shall not be washed in dishwashers.

Detergent residues are present in the detergent reservoir.

- Detergent was put in a long time before the washing procedure. >>> Take care to put in the detergent just before starting the washing operation.
- Opening of the detergent reservoir lid is prevented during washing operation. >>> Place the dishes in a way that does not prevent the detergent reservoir lid from opening and water from the spray arms flowing into the reservoir.
- Detergent is stored under improper conditions. >>> If you are using a powder detergent, do not store the detergent package in humid environments. If possible, store the detergent in a storage container with a lid. We recommend you to use tablet detergent for easy storage.
- The holes of the spray arms are clogged. >>> Upper or lower holes of the spray arms may be clogged with food residues such as lemon seeds. Clean the spray arms regularly as shown in the Section "Cleaning and maintenance."

Patterns and decorations on kitchenware are erased.

- Patterned glasses and porcelain items with a pattern on the glaze are not suitable for washing in the dishwasher. Glass and porcelain tableware manufacturers do not recommend washing such kitchenware in the dishwasher.

The dishes are being scratched.

- Kitchenware and accessories made of aluminium or that contain aluminium shall not be washed in the dishwasher.
- There is a leak of salt. >>> Take care not to pour salt around the filler opening while adding salt. Salt spread around may cause scratching. Ensure that the water softener lid is closed after adding salt. Clean the salt spilt into the dishwasher by running the pre-wash cycle. Check the lid once more at the end of the

cycle, as the salt particles remaining under the lid will dissolve in the pre-wash step, and thus the lid may loosen.
- Water hardness setting is low or salt level is inadequate. >>> Check the water hardness setting by measuring the hardness of the mains water accurately.
- The dishes are not placed properly. >>> When placing glasses and other glass kitchenware in the basket, do not lean them against other dishes, but on the edges of the basket, on the racks or on the glass supporting wire. When two glasses or other dishes being washed hit each other due to the impact of water during washing operation, this may cause scratching/ breaks on the surfaces.
- A blurred stain that looks like a milk soil remains on glasses, which cannot be removed when wiped by hand. When exposed to light, a bluish /rainbow coloured appearance is observed.
- Excessive amount of rinse aid is used. >>> Lower the setting of rinse aid. While adding the rinse aid, always clean the rinse aid overflown to the surroundings.
- Corrosion has occurred on the glass due to soft water. >>> Check the water hardness setting by measuring the hardness of the mains water accurately. Do not use salt if your mains water is soft (<5 dH). Use cycles with a higher temperature setting (e.g. 60-65 degrees) for washing. You may also use commercially available glass-protecting detergents.

Foam occurs in the dishwasher.
- Dishes are washed by hand with dish washing detergent and then put into the dishwasher without rinsing before they are placed in the dishwasher. >>> No foam control characteristics are available in dish washing detergents intended for hand washing. You do not need to hand wash the dishes with detergent before placing them in the dishwasher. Simply rinse off the coarse soil on the surface of the dish with water or scrape it off with a paper napkin or a fork.
- Rinse aid was spilt into the dishwasher while adding rinse aid. >>> Take care not to spill rinse aid into the dishwasher while adding rinse aid. Clean spilt rinse aid with a paper napkin/towel.
- The rinse aid reservoir lid has been left open. >>> Make sure to close the rinse aid reservoir lid after adding rinse aid.

Kitchenware break.
- Dishes are placed irregularly. >>> Place the dishes as specified in the user manual.
- Baskets are overloaded. >>> Do not load baskets above their capacity.
- Water remains in the dishwasher after the end of the cycle.
- Filters are clogged. >>> Check whether the filter system is cleaned. Clean the filter system regularly as shown in the "Cleaning and maintenance" section.
- The drain hose is clogged / blocked. >>> Inspect the drain hose. Remove the hose if required to remove the blockage and then install it again as described in the installation instructions.

10 DISCLAIMER / WARNING

Some (simple) faults can be repaired by end users without causing any safety problems or unsafe use, provided that they are carried out in accordance with the following instructions. (See the section "I Want To Repair Myself").

Therefore, except for the parts specified in the "I Want to Repair Myself" section that can be repaired by end users, repair by an authorised service station is strongly recommended to prevent safety problems and is mandatory for the continuation of the Beko product warranty.

I WANT TO REPAIR MYSELF

Repairs to be carried out by end users can be performed for the following spare parts: External Power Supplies, Remote Control. (Current spare parts list is available at https://www.beko.com.tr/destek address as of 1 March 2021)

In addition, to ensure product safety and to avoid the risk of serious injury, repairs must be carried out according to the instructions in the instruction manual or at https://www.beko.com.tr/destek address. For your safety, unplug the product before carrying out any repair work.

Cannot be held responsible for any safety problems that may arise due to repair operations https://www.beko.com.tr/destek or attempts by end-users to repair parts other than those specified in the user manuals or in accordance with the instructions in the https://www.beko.com.tr/destek address and parts in the current parts list available at the Beko address. In such a case, the Beko product warranty will be invalid.

Therefore, end-users are strongly recommended to refrain from performing repair operations for parts other than the spare parts mentioned above by themselves and to contact an authorised service station if necessary. Such repair attempts by end users may cause safety issues; damage the product and subsequently result in fire, flooding, electric shock and serious personal injury.

Repair processes of the following parts, but not limited to those listed, should be performed by authorised service stations: Internal Power Supply, Capacitors, Battery and Accumulators, etc.

The manufacturer/seller cannot be held responsible for any failure of end users to comply with the above.