kyoceradocumentsolutions.com

Operation Guide

ECOSYS PA2600cwx ECOSYS PA2600cx ECOSYS PA2101cwx ECOSYS PA2101cx

2024.06
C0GKDEN200

Contents

1 Please Read First 1

Preface 2
Machine Features 3
- Optimize your office workflow 3
- Save energy and cost 4
- Strengthen security 5
- Use functions more efficiently 6

Guides Provided with the Machine 7
About the Operation Guide (this Guide) 9
- Structure of the guide 9
- Conventions Used in This Guide 10

Notice 13
- Safety Conventions in This Guide 13
- Environment 14
- Precautions for Use 15
- SAFETY OF LASER BEAM (USA) 16
- Safety Instructions Regarding the Disconnection of Power 17
- Compliance and Conformity 18
- Radio Tag Technology 20
- Other precautions (for users in California, the United States) 21
- Warranty (the United States and Canada) 22
- Wireless Connection (Mexico only) 23
- Security Precautions when Using Wireless LAN (If equipped) 24
- Limited Use of This Product (If equipped) 25
- Legal and Safety Information 26
- Energy Saving Control Function 29
- Automatic 2-Sided Print Function 30
- Resource Saving - Paper 31
- Environmental benefits of "Power Management" 32
- ENERGY STAR Program 33

2 Installing and Setting up the Machine 34

Part Names (Machine Exterior) 35
Part Names (Connectors/Interior) 36
Part Names (With Optional Equipments Attached) 38
Connecting the Machine and Other Devices 39
Connecting Cables 41
- Connecting LAN Cable 41
- Connecting USB Cable 42
- Connecting the Power Cable 43

Power On/Off 44
- Power on 44
- Power off 45

Using the Operation Panel 46
- Operation Panel Keys 46
- Adjusting the Operation Panel Angle 47

Touch Panel 48
- Using the Touch Panel 48
- Home screen 50
- Display for Device Information 52
- Display Setting Screen 53
- Display of Keys That Cannot Be Set 54
- Help Screen 55

Login/Logout 56
- Login 56

Logout 57
Default Settings of the Machine 58
Setting Date and Time 58
Network Setup 60
Energy Saver function 72
Quick Setup Wizard 76
Configuring Settings Quick Setup Wizard 77
Installing Software 78
Published Software (Windows) 78
Installing Software in Windows 79
Uninstalling Windows Software 87
Installing Software on a Mac OS Computer 89
Checking the Counter 94
Additional Preparations for the Administrator 95
Administrator Privileges Overview 95
Log in as Machine Administrator or Administrator 96
Strengthening the Security 97
Command Center RX 99
Accessing Command Center RX 100
Changing Security Settings 101
Changing Device Information 102
SMTP and E-mail Settings 103

3 Preparation before Use 105
Load Paper 106
Loading Paper 106
Precaution for Loading Paper 108
Paper Specifications available in the Cassettes 109
Loading in the Cassettes 110
Paper Specifications available in the Multipurpose Tray 114
Loading Paper in the Multipurpose Tray 115
Specifying Paper Size and Media Type 117
Paper Stopper 122

4 Print from PC 123
Printer Driver Print Settings Screen 124
Displaying the Printer Driver Help 125
Changing the Default Printer Driver Settings (Windows 10) 126
Changing the Default Printer Driver Settings (Windows 11) 127
Printing from PC 128
Printing on Standard Size Paper 128
Printing on Non-standard Size Paper 130
Printing with Universal Print 134
Canceling Printing from a Computer 138
Printing from the Mobile Device 139
Printing by AirPrint 139
Printing by Mopria 140
Printing with Wi-Fi Direct 141
Printing Data Saved in the Printer 142
Specifying the Job Box from a Computer and Storing the Job 142
Printing Documents from Private Print Box 143
Deleting the Documents Stored in the Private Print Box 144
Printing Document from Stored Job Box 145
Deleting the Documents Stored in the Stored Job Box 146
Printing Document from Quick Copy Box 147
Deleting the Documents Stored in the Quick Copy Box 148
Printing Document from Proof and Hold Box 149
Deleting the Documents Stored in the Proof and Hold Box 150
Printing Documents from PIN Print Box 151

Deleting the Documents Stored in the PIN Print Box 152
Printing Document from Universal Print Box 153
Deleting the Documents Stored in the Universal Print Box 155
Configure the Job Box 156
Monitoring the Printer Status (Status Monitor) 157
Accessing the Status Monitor 157
Exiting the Status Monitor 158
Quick View State 159
Printing Progress Tab 160
Paper Tray Status Tab 161
Toner Status Tab 162
Alert Tab 163
Status Monitor Context Menu 164
Status Monitor Notification Settings 165

5 Operation on the Machine 167
Canceling Jobs 168
Using Document Boxes 169
What is Job Box? 169
What is USB Drive Box? 170
Using Removable USB Drive 171
Printing Documents Stored in Removable USB Drive 171
Removing USB Drive 173

6 Using Various Functions 174
About Functions Available on the Machine 175
USB Drive (Printing Documents) 175
Quiet Mode 176
Duplex 177
EcoPrint 178
File Name Entry 179
Job Finish Notice 180
Encrypted PDF 181
TIFF/JPEG size 182
XPS print area setting 183

7 Status/Job Cancel 184
Checking Job Status 185
Displaying Status Screen 185
Checking Job History 187
Displaying Job History Screen 187
Checking the Detailed Information of Histories 188
Sending the Log History 189
Device Information 190
Check Remaining Quantity of Toner, Paper 191

8 System Menu 192
Operation Method 193
System Menu Settings 194
Device Settings 197
Language/Measurement 197
Keyboard 198
Date/Time 199
Energy Saver/Timer 200
Display Settings 203
Sound 204
Paper Feeding 205
Error Handling 213

Toner Settings 214
Notification/Report 215
Print Report/List 215
Low Toner Alert 217
Sending Log History 218
Function Settings 219
Function Defaults 219
Email 221
WSD 222
Printer 223
Job Box 227
Cloud Access Setting 228
Home 229
Status 230
Remote Serv.Set. 231
Network Settings 232
Host Name 232
[Proxy] 233
Wi-Fi Direct Setting 234
Wi-Fi Settings 236
Wired Network Settings 241
Protocol Settings 246
Ping 251
Bonjour 252
IP Filter (IPv4) 253
IP Filter (IPv6) 254
[IPSec] 255
Restart Network 256
Primary Network (Client) 257
Restart Entire Device 258
Security Settings 259
JobAccounting/Authentic. 263
Add/Delete Application 264
Adjustment/Maintenance 265
[Toner SaveLevel] 265
[Color Registration - Normal] 266
[Color Registration - Manual] 267
[Image Adjustment] 268
[Quiet Mode] 269
[Altitude Adjustment] 270
[MC] 271
[Diagnostics] 272
[Test Page] 273
[Event Log] 274
[LLU RPT] 275
[Restart/Initialization] 276
[Service Settings] 277

9 User Authentication and Accounting (User Login, Job Accounting) 278

Overview of User Login Administration 279
Managing the Job Account from PC 279
Enable User Login Administration 280
Setting User Login Administration 281
Authentication Security 281
Adding a User (Local User List) 283
Changing User Properties for Local Users (Admin, DeviceAdmin, PowerUser) 284
Changing User Properties for Network Users 285
Deleting a User 286
Managing the Users that Print on This Machine from a PC 287

Server Settings 289
Configure Network User Rights 290
Obtain NW User Property 291
ID Card Settings 292
PIN Login 295
Using User Login Administration 296
Overview of Job Accounting 297
Enabling Job Accounting 298
Job Accounting 299
Job Accounting (Local) 300
Adding an Account 300
Restricting the Use of the Machine 301
Editing an Account 302
Deleting an Account 303
Job Accounting for Printing 304
Configuring Job Accounting 306
Counting the Number of Pages Printed 306
Print Accounting Report 308
Using Job Accounting 309
Apply Limit 311
Unknown User Settings 312

10 Troubleshooting 314
Regular Maintenance 315
Cleaning 315
Cleaning Paper Transfer Unit 316
Replacing the Toner Container 317
Troubleshooting 321
Solving Malfunctions 321
Machine Operation Trouble 322
Printed Image Trouble 358
Color Printing Trouble 368
Remote Operation 376
Responding to Messages 379
Adjustment/Maintenance 420
Overview of Adjustment/Maintenance 420
Color Adjustment 421
Color Registration Procedure 422
Clearing Paper Jams 427
Jam Location Indicators 427
Remove any jammed paper in the Multipurpose Tray 429
Remove paper jams from Cassette 1 to Cassette 2 432
Remove the paper jammed in the Rear Cover 1 433
Remove the paper jammed in the Rear Cover 2 436

11 Appendix 437
Optional Equipment 438
Option configuration 438
Overview of the Applications 439
Starting Application Use 439
Checking Details of Application 440
Character Entry Method 441
Entry Screens 441
Selecting Type of Characters 443
About Paper 445
Basic Paper Specifications 445
Choosing the Appropriate Paper 446
Special Paper 450
Specifications 460

Machine 460
Printer Function 462
Paper Feeder (250-sheet) 464
Backing up your data 465
Backing up your data using KYOCERA Net Viewer 465
Backing up your data using Command Center RX 466
Security Quick Setup Function List 467
TLS 467
Serverside Settings 468
Clientside Settings 469
IPv4 Settings (Wired Network) 470
IPv4 Settings (Wireless Network) 471
IPv6 Settings (Wired Network) 472
IPv6 Settings (Wireless Network) 473
Other Protocols: HTTP (Client) 474
Other Protocols: SOAP 475
Other Protocols: LDAP 476
Send Protocols: SMTP (E-mail TX) 477
Email: POP3 User Settings 478
Print protocols 479
Other Protocols 481
TCP/IP: Bonjour Settings 483
Network Settings 484
Connectivity 485
Interface Block Setting 486
Energy Saver/Timer 487
User Account Lockout Setting 488
Job Status/Job Logs Settings 489

1 Please Read First

Preface

Thank you for purchasing this machine.

This Operation Guide is intended to help you operate the machine correctly, perform routine maintenance, and take simple troubleshooting measures as needed so that the machine can always be used in the optimum condition.

Please read this Operation Guide before using the machine.

The product illustrations, screens, settings, etc., in this guide may differ depending on the machine you are using.

We recommend the use of our genuine toner containers, which have passed rigorous quality control testing, to maintain quality.

The use of non-genuine toner containers may cause failure.

We will not be liable for any damages caused by the use of third-party supplies in this machine.

A label is affixed to our genuine supplies, as shown below.

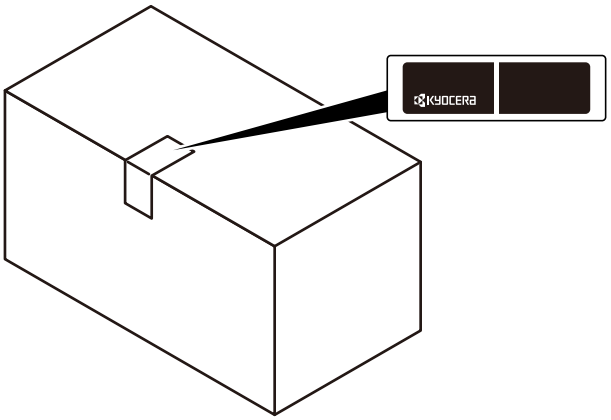

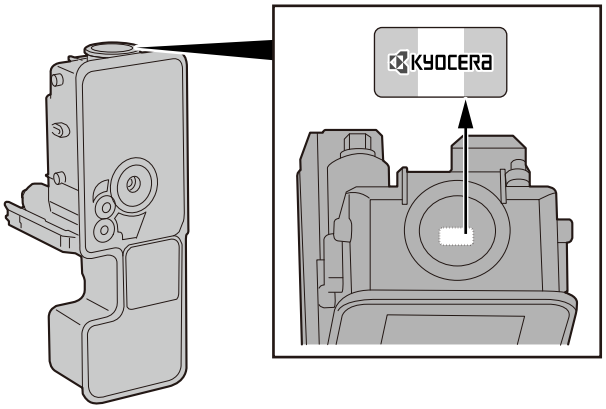

Checking the Equipment's Serial Number

The equipment's serial number is printed in the location shown in the figure.

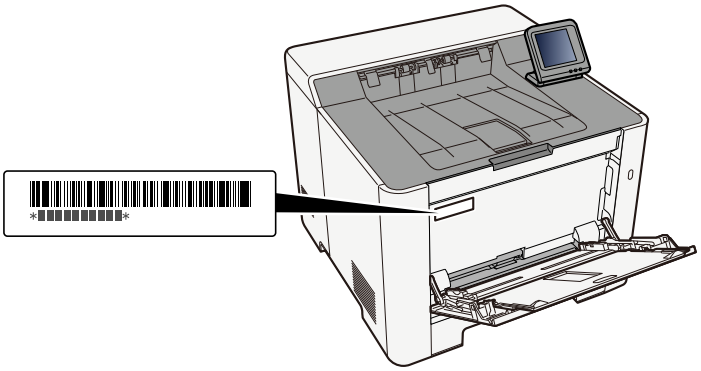

You'll need the equipment's serial number when contacting your Service Representative. Please check the number before contacting your service representative.

Machine Features

The machine is equipped with many useful functions.

➡ Using Various Functions (page 174)

Here are some examples.

Optimize your office workflow

Save frequently used documents in the machine

You can save the frequently used document in the machine and print it when needed.

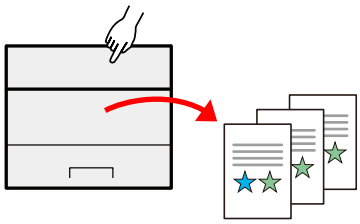

➡ Using Document Boxes (page 169)

Save energy and cost

Save energy as needed (Energy Saver function)

The machine is equipped with Energy Saver function that automatically switches the machine into Sleep Mode.

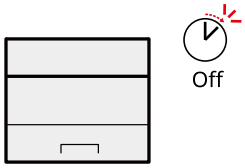

➡ Energy Saver function (page 72)

Printing with reduced toner consumption (EcoPrint)

You can save toner consumption with this function.

When you only need to check the printed content, such as a trial print run or documents for internal confirmation, use this function to save toner.

Use this function when a high-quality print is not required.

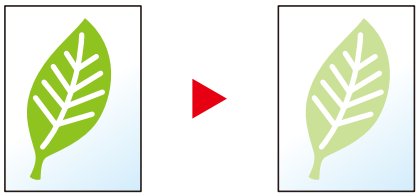

➡ EcoPrint (page 178)

Reduce paper use (Paper Saving Printing)

You can print originals on both sides of the paper. You can also print multiple originals onto one sheet.

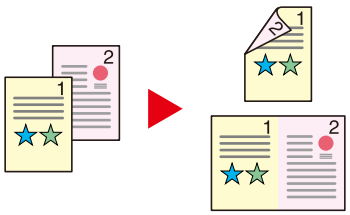

➡ Duplex (page 177)

Strengthen security

Prevent loss of finished documents (Private Print)

Temporarily saving print jobs in the main unit document box and outputting them when in front of the device can prevent documents from being taken by others.

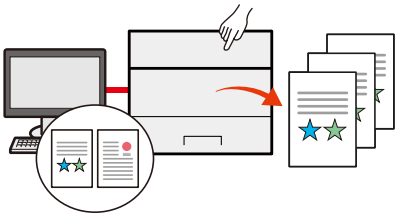

➡ Printing Documents from Private Print Box (page 143)

Log in by ID card (Card Authentication)

You can log in simply by touching an ID card. You don't need to enter your user name and password.

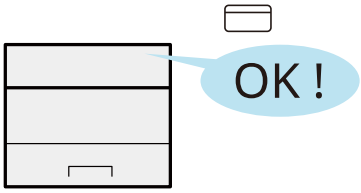

➡ Card Authentication Kit(B) AC <IC card authentication kit (Activate)> (page 438)

Strengthen security (Settings for Administrator)

Various functions are available for administrators to strengthen security.

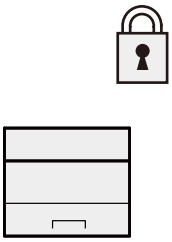

➡ Strengthening the Security (page 97)

Prevent the execution of malware (Allowlisting)

Prevent malware from running and prevent software tampering and maintain system reliability.

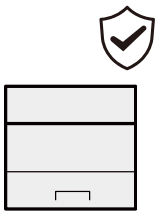

➡ Allowlisting (page 261)

Use functions more efficiently

Make the machine quiet (Quiet Mode)

You can make the machine quiet by reducing its running noise.

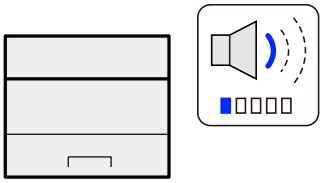

➡ Quiet Mode (page 176)

Install the machine without concerning the network cables (Wireless Network)

(Machine equipped with Wi-Fi module)

If there is a wireless LAN environment, it is possible to install the unit without worrying about the network wiring. In addition, Wi-Fi Direct, etc. are supported.

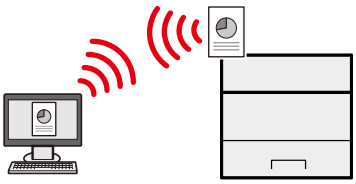

➡ Configuring the Wireless Network (page 62)

Use USB drive(USB Drive)

It is useful when you need to print documents outside your office or you cannot print documents from your PC.

You can print the document from the USB drive by plugging it directly into the machine.

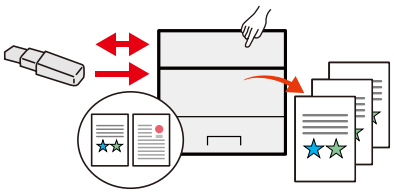

➡ Using Removable USB Drive (page 171)

Perform remote operation (Command Center RX)

You can access to the machine remotely to print data.

Administrators can configure the machine behavior or management settings.

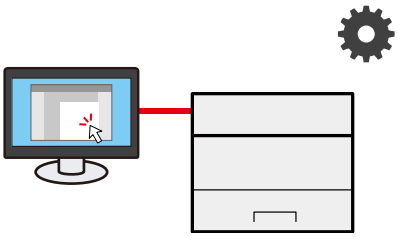

➡ Command Center RX (page 99)

Guides Provided with the Machine

The following guides are provided with the machine. Refer to each guide as needed. The guides can be downloaded from the Download Center (https://kyocera.info/). To view the guides on a computer, Adobe Reader Version 8.0 or later needs to be installed.

The contents of the guides are subject to change without notice for the purpose of improvement of machine performance.

To set up the machine:	**Setup Guide** Explains the setup procedure to follow in order to print with this machine. This printed guide is provided together with the machine.
Start using the machine quickly	**Quick Guide** Explains frequently-used operations and what to do when problems occur. This printed guide is provided together with the machine.
For safe use of the machine	**Safety Guide** Provides safety and cautionary information for installation environment and use of the machine. Be sure to read this guide before using the machine. This printed guide is provided together with the machine. **Safety Guide (ECOSYS PA2600cwx/ECOSYS PA2600cx/ECOSYS PA2100cwx/ECOSYS PA2100cx)** Indicates the space required for machine installation, and describes the cautionary labels and other safety information. Be sure to read this guide before using the machine. This printed guide is provided together with the machine.
Use the machine to its fullest	**Operation Guide (this guide)** Explains paper loading, basic operations, and various default settings.
Use the ID card	**Card Authentication Kit (B) Operation Guide** Explains how to perform authentication using the ID card.
Strengthen security	**Data Encryption/Overwrite Operation Guide** Explains how to introduce and use the Data Encryption/Overwrite Function, and how to overwrite and encrypt data.
Easily register machine information and configure settings	**Command Center RX User Guide** Explains how to access the machine from a Web browser on your computer to check and change settings.
Print data from a computer	**Printer Driver User Guide** Explains how to install the printer driver and use the printer function.
Monitor the machine and printers on the network	**KYOCERA Net Viewer User Guide** Explains how to monitor your network printing system (the machine) with KYOCERA Net Viewer.

Print without using the printer driver	**PRESCRIBE Commands Command Reference** Describes the native printer language (PRESCRIBE commands). **PRESCRIBE Commands Technical Reference** Describes the PRESCRIBE command functions and control for each type of emulation.
Directly print a PDF file	**KYOCERA Net Direct Print Operation Guide** Explains how to print PDF files without launching Adobe Acrobat or Reader.
Adjust the printing position	**Maintenance Menu User Guide** Explains how to configure print settings.

About the Operation Guide (this Guide)

Structure of the guide

The Operation Guide contains the following chapters.

Chapter	Contents
Please Read First	Provides precautions regarding use of the machine and trademark information.
Installing and Setting up the Machine	Explains part names, cable connections, installation of the software, login, logout, and other matters related to administration of the machine.
Preparation before Use	Explains preparations and settings that are required in order to use the machine, such as how to load paper.
Print from PC	Explains the basic printing method.
Operation on the Machine	Explains the basic procedures for using document boxes.
Using Various Functions	Explains convenient functions that are available on the machine.
Status/Job Cancel	Explains how to check the status of a job and the job history, and how to cancel jobs being printed or waiting to print. Also explains how to check paper and toner levels, and how to check the device status.
System Menu	Explains System Menu and how it relates to the operation of the machine.
User Authentication and Accounting (User Login, Job Accounting)	Explains user login and job accounting.
Troubleshooting	Explains what to do when toner runs out, an error is displayed, or a paper jam or other problem occurs.
Appendix	Describes convenient options that are available for the machine. Provides information on media types and paper sizes, and gives a glossary of terms. Explains how to enter characters, and lists the specifications of the machine.

Conventions Used in This Guide

Adobe Reader is used as an example in the explanations below.

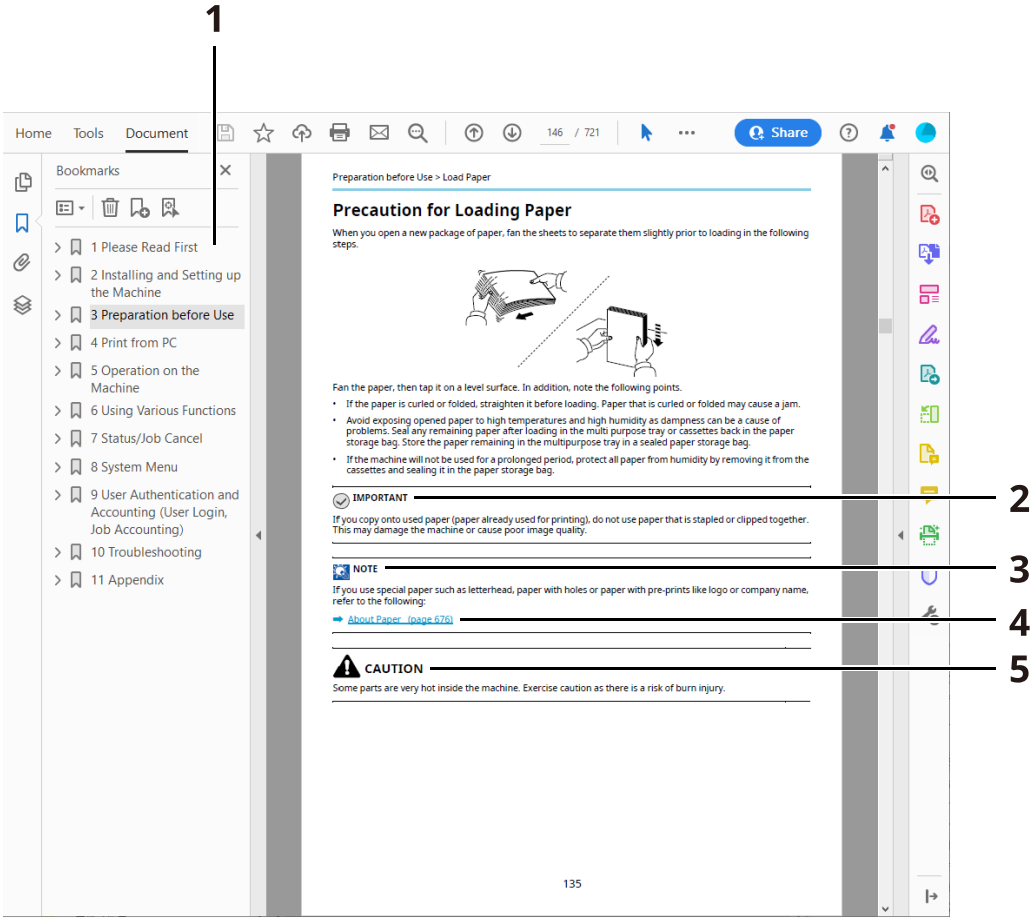

1 Click an item in the Table of Contents to jump to the corresponding page.

2 Indicates operational requirements and restrictions to operate the machine correctly, and avoid damage to the machine or property.

3 Indicates supplemental explanations and reference information for operations.

4 Click the underlined text to jump to the corresponding page.

5 Indicates that personal injury or mechanical damage may result from insufficient attention to or incorrect compliance with the related points.

NOTE

The items that appear in Adobe Reader vary depending on how it is used. If the Table of Contents or tools do not appear, refer to Adobe Reader Help.

Certain items are indicated in this guide by the conventions described below.

Convention	Description
[ ]	Indicates keys and buttons.
" "	Indicates a message.

Conventions Used in Procedures for Operating the Machine

In this Operation Guide, continuous operation is shown with > in sequence, as below:

Actual procedure

1 Select the [Home] key.
2 Select [...], then press [System Menu].
3 Move the screen downwards. (i.e. swiping)
4 Select [Device Settings]
5 Select the [OK] key

Procedure indicated in this guide

[Home] key > [...] > [System Menu] > [Device Settings] > [OK] key

For details on touch panel operation, refer to the following:

➡ Touch Panel (page 48)

Size of Paper

Paper sizes such as A5 can be used in both the horizontal and vertical orientations. To distinguish the orientations when these sizes are used, "R" is added to sizes used in the horizontal orientation.

Set the paper in vertical orientation

When loading in a cassette

Setting Position (X=Width, Y=Length)	Indicated size in this Guide
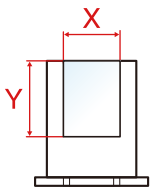	A5-R

When loading in the multipurpose tray

Setting Position (X=Width, Y=Length)	Indicated size in this Guide
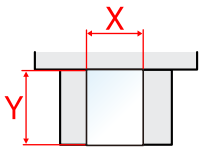	A5-R

Paper sizes that can be used vary depending on the function and paper feeder unit. For details, refer to the following.

Set the paper in horizontal orientation

When loading in a cassette

Setting Position (X=Width, Y=Length)	Indicated size in this Guide
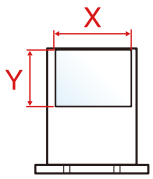	A5

When loading in the multipurpose tray

Setting Position (X=Width, Y=Length)	Indicated size in this Guide
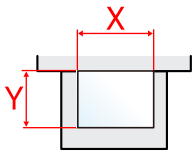	A5

Paper sizes that can be used vary depending on the function and paper feeder unit. For details, refer to the following.

➡ Specifications (page 460)

Notice

Safety Conventions in This Guide

The sections of this guide and parts of the machine marked with symbols are safety warnings meant to protect the user, other individuals and surrounding objects, and ensure correct and safe usage of the machine. The symbols and their meanings are indicated below.

WARNING:

Indicates that serious injury or even death may result from insufficient attention to or incorrect compliance with the related points.

CAUTION:

Indicates that personal injury or mechanical damage may result from insufficient attention to or incorrect compliance with the related points.

Symbols

The △ symbol indicates that the related section includes safety warnings. Specific points of attention are indicated inside the symbol.

[General warning]

[Warning of high temperature]

The ⃠ symbol indicates that the related section includes information on prohibited actions. Specifics of the prohibited action are indicated inside the symbol.

[Warning of prohibited action]

[Disassembly prohibited]

The ● symbol indicates that the related section includes information on actions which must be performed. Specifics of the required action are indicated inside the symbol.

[Alert of required action]

[Remove the power plug from the outlet]

[Always connect the machine to an outlet with a ground connection]

Environment

The service environmental conditions are as follows:

Temperature	10 to 32.5°C/50 to 90.5°F But humidity should be 70% or less when temperature is 90.5 °F (32.5 °C).
Humidity	10 to 80% But temperature should be 86 °F (30 °C) or less when humidity is 80%.

Avoid the following locations when selecting a site for the machine.

- Avoid locations near a window or with exposure to direct sunlight.
- Avoid locations with vibrations.
- Avoid locations with drastic temperature fluctuations.
- Avoid locations with direct exposure to hot or cold air.
- Avoid poorly ventilated locations.

During copying, some ozone is released, but the amount does not cause any ill effect to one's health.

If, however, the machine is used over a long period of time in a poorly ventilated room or when making an extremely large number of copies, the smell may become unpleasant.

To maintain the appropriate environment for copy work, it is suggested that the room be properly ventilated.

Precautions for Use

Cautions when handling consumables

CAUTION

Do not attempt to incinerate parts which contain toner. Dangerous sparks may cause burns.

Keep parts which contain toner out of the reach of children.

If toner happens to spill from parts which contain toner, avoid inhalation and ingestion, as well as contact with your eyes and skin.

- If you do happen to inhale toner, move to a place with fresh air and gargle thoroughly with a large amount of water. If coughing develops, contact a physician.
- If you do happen to ingest toner, rinse your mouth with water and drink 1 or 2 cups of water to dilute the contents of your stomach. If necessary, contact a physician.
- If you do happen to get toner in your eyes, flush them thoroughly with water. If there is any remaining tenderness, contact a physician.
- If toner does happen to get on your skin, wash with soap and water.

Do not attempt to force open or destroy parts which contain toner.

Other precautions

Return the exhausted toner container to your dealer or service representative. The collected toner container will be recycled or disposed in accordance with the relevant regulations.

Store the machine while avoiding exposure to direct sunlight.

Store the machine in a place where the temperature stays below 40 °C while avoiding sharp changes of temperature and humidity.

If the machine will not be used for an extended period of time, remove the paper from the cassette and the Multipurpose (MP) Tray, return it to its original package and reseal it.

SAFETY OF LASER BEAM (USA)

Safety of laser beam

This machine has been certified by the manufacturer to Class 1 level under the radiation performance standards established by the U.S.DHHS (Department of Health and Human Services) in 1968. This indicates that the product is safe to use during normal operation and maintenance. The laser optical system, enclosed in a protective housing and sealed within the external covers, never permits the laser beam to escape.

The CDRH Act

A laser-product-related act was implemented on Aug. 2, 1976, by the Center for Devices and Radiological Health (CDRH) of the U.S. Food and Drug Administration (FDA). This act prohibits the sale of laser products in the U.S. without certification, and applies to laser products manufactured after Aug. 1, 1976. The label shown below indicates compliance with the CDRH regulations and must be attached to laser products marketed in the United States.

The position of the rating label is show below.

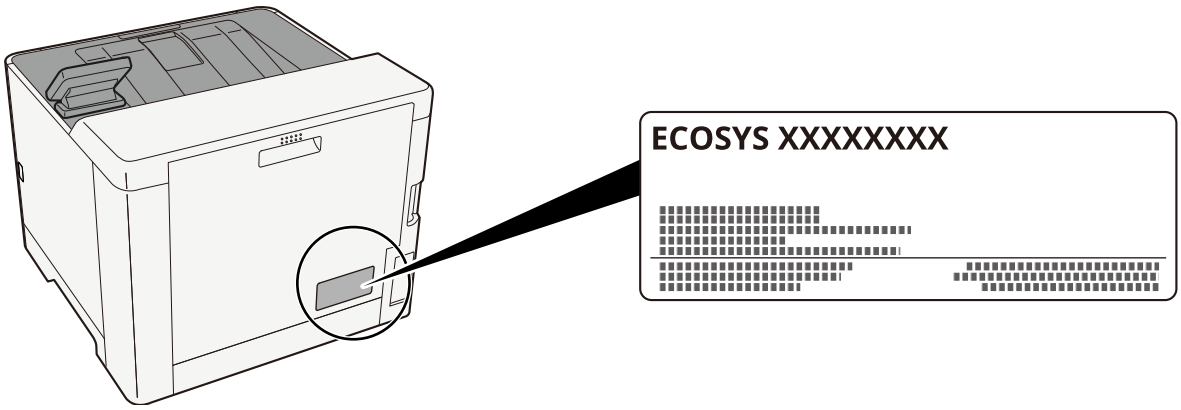

Optical unit

When checking the optical unit, avoid direct exposure to the laser beam, which is invisible. Shown at below is the label located on the cover of the optical unit.

Maintenance

For safety of the service personnel, follow the maintenance instructions in the other section of this manual.

Safety Instructions Regarding the Disconnection of Power

Caution: The power plug is the main isolation device! Other switches on the equipment are only functional switches and are not suitable for isolating the equipment from the power source.

Compliance and Conformity

Hereby, KYOCERA Document Solutions Inc. declares that the radio equipment type ECOSYS PA2600cwx, ECOSYS PA2101cwx are in compliance with Directive 2014/53/EU.

The full text of the EU declaration of conformity is available at the following internet address:

https://www.kyoceradocumentsolutions.eu/index/service/dlc.html

NOTE

Use shielded interface cables.

This equipment has been tested and found to comply with the limits for a Class B digital device, pursuant to Part 15 of the FCC Rules.

These limits are designed to provide reasonable protection against harmful interference in a residential installation. This equipment generates, uses and can radiate radio frequency energy and, if not installed and used in accordance with the instructions, may cause harmful interference to radio communications. However, there is no guarantee that interference will not occur in a particular installation. If this equipment does cause harmful interference to radio or television reception, which can be determined by turning the equipment off and on, the user is encouraged to try to correct the interference by one or more of the following measures:

- Reorient or relocate the receiving antenna.
- Increase the separation between the equipment and receiver.
- Connect the equipment into an outlet on a circuit different from that to which the receiver is connected.
- Consult the dealer or an experienced radio/TV technician for help.
- The use of a non-shielded interface cable with the referenced device is prohibited.

FCC Caution: Any changes or modifications not expressly approved by the party responsible for compliance could void the user's authority to operate this equipment.

This device complies with Part 15 of FCC Rules.

Operation is subject to the following two conditions; (1) this device may not cause harmful interference, and (2) this device must accept any interference received, including interference that may cause undesired operation.

IMPORTANT NOTE:

Radiation Exposure Statement:

This equipment complies with FCC radiation exposure limits set forth for an uncontrolled environment. This equipment should be installed and operated with minimum distance 20 cm between the radiator & your body.

Industry Canada statement:

This device contains licence-exempt transmitter(s) / receiver(s) that complies with Innovation, Science and Economic Development Canada’s licence-exempt RSS (s). Operation is subject to the following two conditions:

1. This device may not cause interference.
2. This device must accept any interference, including interference that may cause undesired operation of the device.

The antenna(s) used for this transmitter must be installed to provide a separation distance of at least 20 cm from all persons and must not be co-located or operating in conjunction with any other transmitter.

Industry Canada ICES-003 Compliance Label: CAN ICES-3B/NMB-3B

* The above statements are valid only in the United States of America and Canada.

NOTE — Use shielded interface cables.

Caution:

The device for operation in the band 5150-5250 MHz is only for indoor use to reduce the potential for harmful interference to co-channel mobile satellite systems;

Operations in the 5.25-5.35GHz band are restricted to indoor usage only.

Radiation Exposure Statement:

This equipment complies with Canada radiation exposure limits set forth for an uncontrolled environment. This equipment should be installed and operated with minimum distance 20cm between the radiator & your body. * These above statements are valid in the United States of America, Canada and EU.

Radio Tag Technology

In some countries the radio tag technology used in this equipment to identify the toner container may be subject to authorization and the use of this equipment may consequently be restricted.

Other precautions (for users in California, the United States)

Perchlorate Material - special handling may apply. See www.dtsc.ca.gov/hazardouswaste/perchlorate.

Warranty (the United States and Canada)

ECOSYS PA2600cwx/ ECOSYS PA2600cx
ECOSYS PA2101cwx/ ECOSYS PA2101cx
COLOR PRINTER LIMITED WARRANTY

KYOCERA Document Solutions America, Inc. and KYOCERA Document Solutions Canada, Ltd. (both referred to as "KYOCERA") warrant the Customer's new color Multifunctional Product (referred to as "MFP"), and the new accessories installed with the initial installation of the MFP, against any defects in material and workmanship for a period of one year, or 100,000 copies/prints from date of installation, whichever first occurs. In the event the MFP or an accessory is found to be defective within the warranty period, KYOCERA's only obligation and the Customer's exclusive remedy shall be replacement of any defective parts. KYOCERA shall have no obligation to furnish labor.

This warranty is valid only for the original retail purchaser (referred to as the "Customer") of a new KYOCERA MFP in the United States of America or Canada, based upon the country of purchase.

In order to obtain performance of this warranty, the Customer must immediately notify the Authorized KYOCERA Dealer from whom the product was purchased. If the KYOCERA Dealer is not able to provide service, write to KYOCERA at the address below for the name and address of the Authorized KYOCERA Dealer in your area, or check KYOCERA's website at https://www.kyoceradocumentsolutions.com for KYOCERA Document Solutions America, Inc. or https://www.kyoceradocumentsolutions.ca for KYOCERA Document Solutions Canada, Ltd.

This warranty does not cover MFPs or accessories which: (a) have become damaged due to operator negligence, misuse, accidents, improper storage or unusual physical or electrical stress, (b) have used parts or supplies which are not genuine KYOCERA brand parts or supplies, (c) have been installed or serviced by a technician not employed by KYOCERA or an Authorized KYOCERA Dealer, or (d) have had the serial number modified, altered, or removed.

This warranty gives the Customer specific legal rights. The Customer may also have other rights, which vary from state to state, or province to province. Neither the seller, nor any other person, is authorized to extend the time period or expand this warranty on behalf of KYOCERA.

THIS WARRANTY IS MADE IN LIEU OF ALL OTHER WARRANTIES AND CONDITIONS, EXPRESS OR IMPLIED, AND KYOCERA SPECIFICALLY DISCLAIMS ANY IMPLIED WARRANTY OR CONDITION OF MERCHANTABILITY OR FITNESS FOR A PARTICULAR PURPOSE. THIS WARRANTY SHALL NOT EXTEND TO, AND KYOCERA SHALL NOT BE LIABLE FOR, ANY INCIDENTAL OR CONSEQUENTIAL DAMAGES WHICH MAY ARISE OUT OF THE USE OF, OR INABILITY TO USE, THE MFP.

KYOCERA Document Solutions America, Inc.
225 Sand Road, P.O. Box 40008
Fairfield, New Jersey 07004-0008, USA

KYOCERA Document Solutions Canada, Ltd.
6120 Kestrel Rd., Mississauga, ON L5T 1S8,
Canada

Wireless Connection (Mexico only)

The operation of this equipment is subject to the following two conditions:

(1) it is possible that this equipment or device may not cause harmful interference, and (2) this equipment or device must accept any interference, including interference that may cause undesired operation.

La operación de este equipo está sujeta a las siguientes dos condiciones:

(1) es posible que este equipo o dispositivo no cause interferencia perjudicial y (2) este equipo o dispositivo debe aceptar cualquier interferencia, incluyendo la que pueda causar su operación no deseada.

Security Precautions when Using Wireless LAN (If equipped)

Wireless LAN allows information to be exchanged between wireless access points instead of using a network cable, which offers the advantage that a WLAN connection can be established freely within an area in which radio waves can be transmitted.

On the other hand, the following problems may occur if security settings are not configured, because radio waves can pass through obstacles (including walls) and reach everywhere within a certain area.

Secretly Viewing Communication Contents

A third person with malicious objectives may intentionally monitor radio waves and gain unauthorized access to the following communication contents.

- Personal information including ID, passwords, and credit card numbers
- Contents of email messages

Illegal Intrusion

A third party with malicious intent may gain unauthorized access to personal or company networks and conduct the following illegal actions.

- Extracting personal and confidential information (information leak)
- Entering into communication while impersonating a specific person and distributing unauthorized information (spoofing)
- Modifying and retransmitting intercepted communications (falsification)
- Transmitting computer viruses and destroying data and systems (destruction)

Wireless LAN cards and wireless access points contain built-in security mechanisms to address these problems and to reduce the possibility of these problems occurring by configuring the security settings of wireless LAN products when the product is used.

We recommend that customers take responsibility and use their judgment when configuring the security settings and that they ensure that they fully understand the problems that can occur when the product is used without configuring the security settings.

Limited Use of This Product (If equipped)

(Machine equipped with Wi-Fi module)

- Radio waves transmitted from this product may affect medical equipment. When using this product in a medical institution or in the vicinity of medical instruments, either use this product according to the instructions and precautions provided by the administrator of the institution or those provided on the medical instruments.
- Radio waves transmitted from this product may affect automatic control equipment including automatic doors and fire alarms. When using this product in the vicinity of the automatic control equipment, use this product according to the instructions and precautions provided on the automatic control equipment.
- If this product is used in devices that are directly related to service including airplanes, trains, ships, and automobiles or this product is used in applications requiring high reliability and safety to function and in devices requiring accuracy including those used in disaster prevention and crime prevention and those used for various safety purposes, please use this product after considering the safety design of the entire system including adoption of a fail-safe design and redundancy design for reliability and safety maintenance of the entire system. This product is not intended for use in applications requiring high reliability and safety including aerospace instruments, trunk communication equipment, nuclear power control equipment, and medical equipment; hence, the decision as to whether to use this product in these applications needs to be fully considered and determined.

Sólo México (Mexico only)

Este equipo utiliza el módulo de interfaz de red inalámbrica modelo LBWA1ZZ1CA para conectarse a las redes Inalámbricas.

Legal and Safety Information

Unauthorized reproduction (copying) of all or part of this document is prohibited, with the exception of copyright law exceptions.

Regarding Trade Names

- PRESCRIBE and ECOSYS are registered trademarks of Kyocera Corporation.
- KPDL is a trademark of Kyocera Corporation.
- Active Directory, Azure, Microsoft, Microsoft 365, Microsoft Edge, Windows and Windows Server are registered trademarks or trademarks of Microsoft Corporation in the U.S.A. and/or other countries.
- PCL is a trademark of Hewlett-Packard Company.
- Adobe, Acrobat, PostScript and Reader are registered trademarks or trademarks of Adobe Inc. in the U.S.A. and/or other countries.
- Ethernet is a registered trademark of Fuji Xerox Co., Ltd.
- IBM and IBM PC/AT are trademarks of International Business Machines Corporation.
- AppleTalk, Bonjour, Mac, and Mac OS are trademarks of Apple Inc., registered in the U.S. and other countries.
- All European language fonts installed in this machine are used under licensing agreement with Monotype Imaging Inc.
- Helvetica, Palatino and Times are registered trademarks of Linotype GmbH.
- ITC Avant Garde Gothic, ITC Bookman, ITC ZapfChancery and ITC ZapfDingbats are registered trademarks of International Typeface Corporation.
- ThinPrint is a trademark of Cortado AG in Germany and other countries.
- UFST ™ MicroType ® fonts by Monotype Imaging Inc. are installed in this machine.
- iPad, iPhone and iPod touch are trademarks of Apple Inc., registered in the U.S. and other countries.
- AirPrint and the AirPrint logo are trademarks of Apple Inc.
- iOS is a trademark or registered trademark of Cisco in the U.S. and other countries and is used under license by Apple Inc.
- Google is trademarks and/or registered trademarks of Google LLC.
- Mopria ™ is registered trademarks of Mopria ™ Alliance.
- Wi-Fi, Wi-Fi Direct and Wi-Fi Protected Setup are trademarks and/or registered trademarks of Wi-Fi Alliance.
- RealVNC, VNC and RFB are registered trademarks of RealVNC Ltd. in the U.S. and in other countries.

All other brands and product names are registered trademarks or trademarks of their respective companies. Neither ™ nor ® will be specified in the main text.

Monotype Imaging License Agreement

1 Software shall mean the digitally encoded, machine readable, scalable outline data as encoded in a special format as well as the UFST Software.

2 You agree to accept a non-exclusive license to use the Software to reproduce and display weights, styles and versions of letters, numerals, characters and symbols (Typefaces) solely for your own customary business or personal purposes at the address stated on the registration card you return to Monotype Imaging. Under the terms of this License Agreement, you have the right to use the Fonts on up to three printers. If you need to have access to the fonts on more than three printers, you need to acquire a multiuser license agreement which can be obtained from Monotype Imaging. Monotype Imaging retains all rights, title and interest to the Software and Typefaces and no rights are granted to you other than a License to use the Software on the terms expressly set forth in this Agreement.

3 To protect proprietary rights of Monotype Imaging, you agree to maintain the Software and other proprietary information concerning the Typefaces in strict confidence and to establish reasonable procedures regulating access to and use of the Software and Typefaces.

4 You agree not to duplicate or copy the Software or Typefaces, except that you may make one backup copy. You agree that any such copy shall contain the same proprietary notices as those appearing on the original.

5 This License shall continue until the last use of the Software and Typefaces, unless sooner terminated. This License may be terminated by Monotype Imaging if you fail to comply with the terms of this License and such failure is not remedied within thirty (30) days after notice from Monotype Imaging. When this License expires or is terminated, you shall either return to Monotype Imaging or destroy all copies of the Software and Typefaces and documentation as requested.

6 You agree that you will not modify, alter, disassemble, decrypt, reverse engineer or decompile the Software.

7 Monotype Imaging warrants that for ninety (90) days after delivery, the Software will perform in accordance with Monotype Imaging-published specifications, and the diskette will be free from defects in material and workmanship. Monotype Imaging does not warrant that the Software is free from all bugs, errors and omissions.

The parties agree that all other warranties, expressed or implied, including warranties of fitness for a particular purpose and merchantability, are excluded.

8 Your exclusive remedy and the sole liability of Monotype Imaging in connection with the Software and Typefaces is repair or replacement of defective parts, upon their return to Monotype Imaging.

In no event will Monotype Imaging be liable for lost profits, lost data, or any other incidental or consequential damages, or any damages caused by abuse or misapplication of the Software and Typefaces.

9 Massachusetts U.S.A. law governs this Agreement.

10 You shall not sublicense, sell, lease, or otherwise transfer the Software and/or Typefaces without the prior written consent of Monotype Imaging.

11 Use, duplication or disclosure by the Government is subject to restrictions as set forth in the Rights in Technical Data and Computer Software clause at FAR 252-227-7013, subdivision (b)(3)(ii) or subparagraph (c)(1)(ii), as appropriate. Further use, duplication or disclosure is subject to restrictions applicable to restricted rights software as set forth in FAR 52.227-19 (c)(2).

12 You acknowledge that you have read this Agreement, understand it, and agree to be bound by its terms and conditions. Neither party shall be bound by any statement or representation not contained in this Agreement. No change in this Agreement is effective unless written and signed by properly authorized representatives of each party. By opening this diskette package, you agree to accept the terms and conditions of this Agreement.

OpenSSL License

For the Open Source Software license, go into the following URL and select Country > Product Name > OS > Language and then, refer to the “OSS_Notice” from the manual tab in the Download.

https://kyocera.info/

Energy Saving Control Function

To reduce power consumption when idle, the device comes equipped with a power management function that automatically shifts to "Sleep" to minimize power consumption after a certain period of time has passed since the device was last used.

➡ Sleep (page 72)

Automatic 2-Sided Print Function

This device includes 2-sided printing as a standard function. For example, by printing two 1-sided originals onto a single sheet of paper as a 2-sided print, it is possible to lower the amount of paper used.

➡ Duplex (page 177)

Printing in duplex mode reduces paper consumption and contributes to the conservation of forest resources. Duplex mode also reduces the amount of paper that must be purchased, and thereby reduces cost. It is recommended that machines capable of duplex printing be set to use duplex mode by default.

Resource Saving - Paper

For the preservation and sustainable use of forest resources, it is recommended that recycled as well as virgin paper certified under environmental stewardship initiatives or carrying recognized ecolabels, which meet EN 12281:2002* or an equivalent quality standard, be used.

This machine also supports printing on 64 g/m^2 paper. Using such paper containing less raw materials can lead to further saving of forest resources.

* : EN12281:2002 "Printing and business paper - Requirements for copy paper for dry toner imaging processes"

Contact your dealer or service representative for recommended paper types.

Environmental benefits of "Power Management"

To reduce power consumption when idle, this machine is equipped with a power management function that automatically activates energy-saving mode when the machine is idle for a certain period of time.

Although it takes the machine a slight amount of time to return to READY mode when in energy-saving mode, a significant reduction in energy consumption is possible. It is recommended that the machine be used with the activation time for energy-saving mode set to the default setting.

ENERGY STAR Program

We participate in the ENERGY STAR® Program. We provide the products that comply with ENERGY STAR standards to the market.

ENERGY STAR is an energy efficiency program with the goal of developing and promoting the use of products with high energy efficiency in order to help prevent global warming. By purchasing the products that comply with ENERGY STAR, customers can help reduce emissions of greenhouse gases during product use and cut energy-related costs.

2 Installing and Setting up the Machine

Part Names (Machine Exterior)

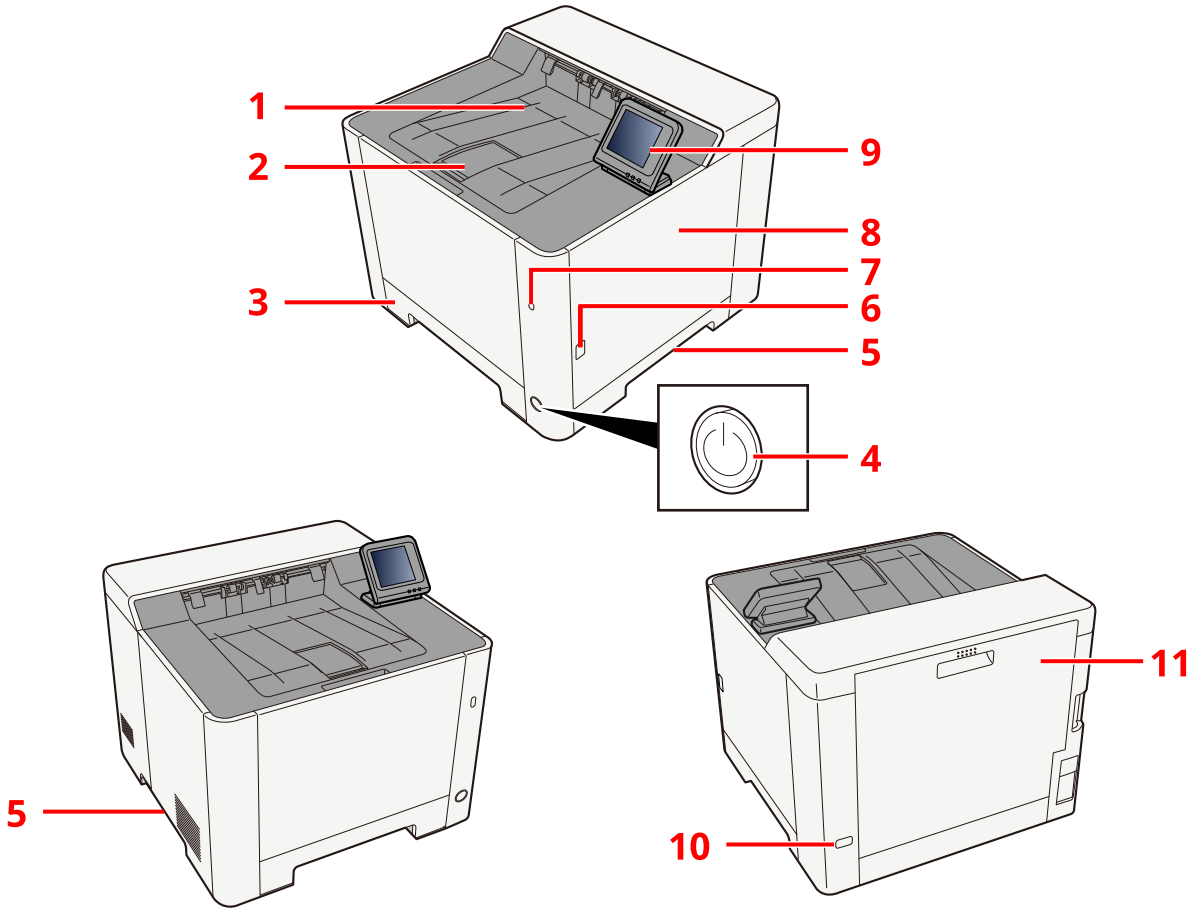

1 Top tray
2 Paper stopper
3 Cassette 1
4 Power Switch
5 Handles
6 Button (Right cover open)
7 USB port
8 Right cover
9 Operation panel
10 Anti-theft lock slot
11 Rear cover 1

Part Names (Connectors/Interior)

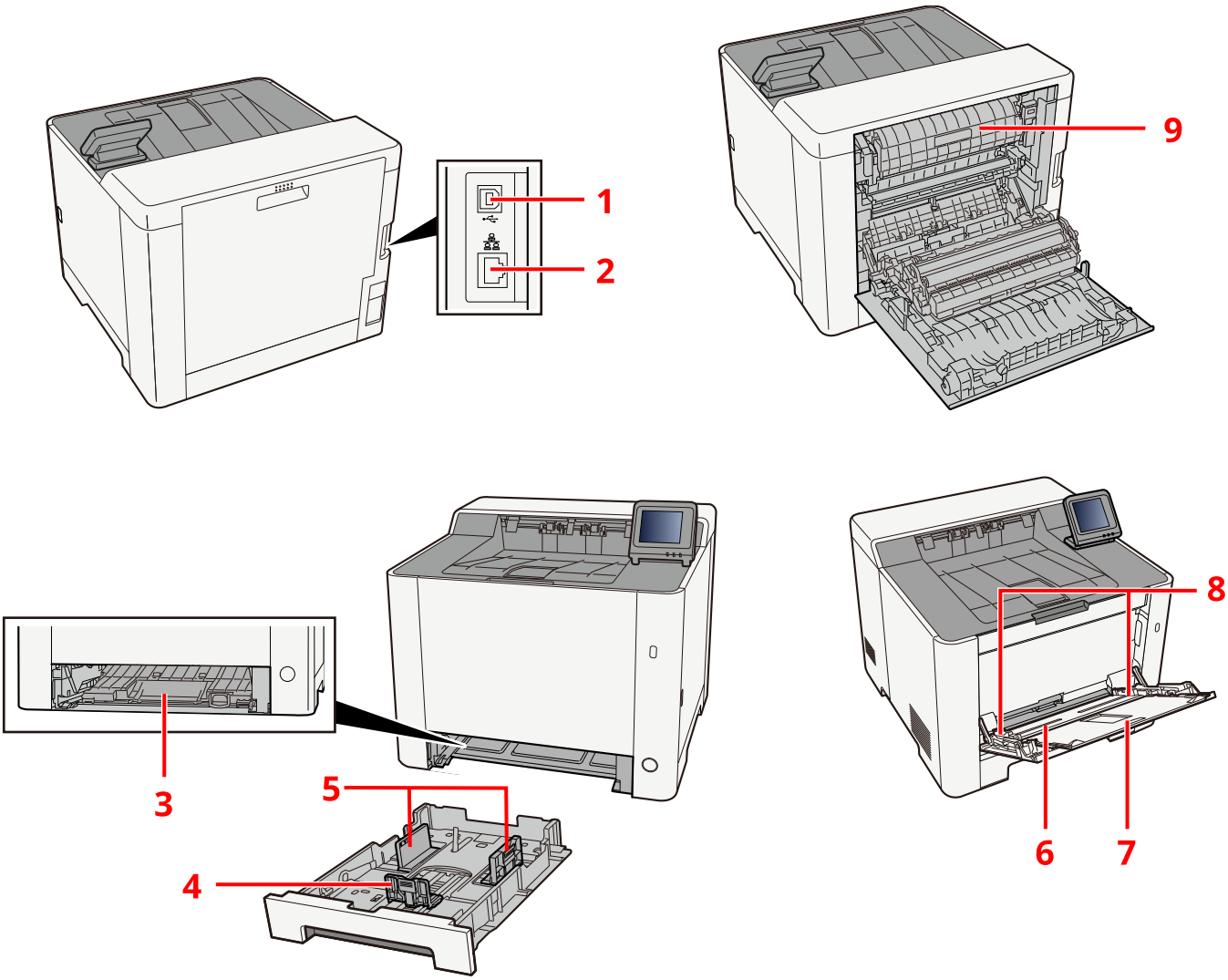

1 USB interface connector
2 Network interface connector
3 Feed cover
4 Paper length guide
5 Paper width guides
6 Multipurpose Tray
7 Tray extension
8 Paper width guides
9 Fuser unit

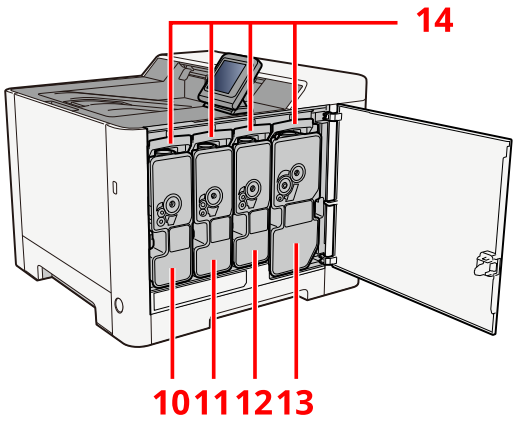

10 Toner container (Yellow)

11 Toner container (Magenta)

12 Toner container (Cyan)

13 Toner container (Black)

14 Toner container lock lever

Part Names (With Optional Equipments Attached)

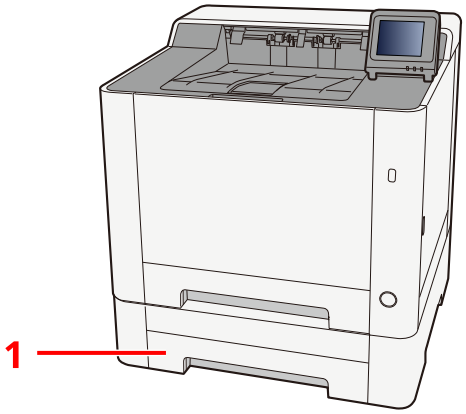

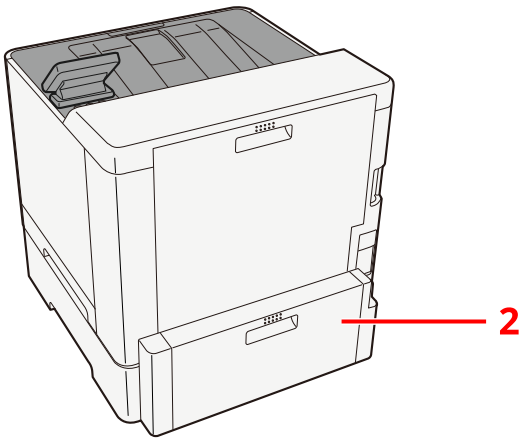

1 Cassette 2

2 Rear Cover 2

For details of options, refer to the following:

➡ Option configuration (page 438)

Connecting the Machine and Other Devices

Prepare the cables necessary to suit the environment and purpose of the machine use.

When Connecting the Machine to the PC via USB

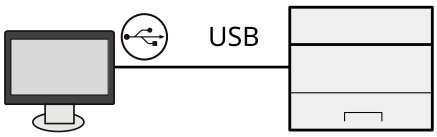

When Connecting the Machine to the PC or Tablet by network cable, Wi-Fi, or Wi-Fi direct

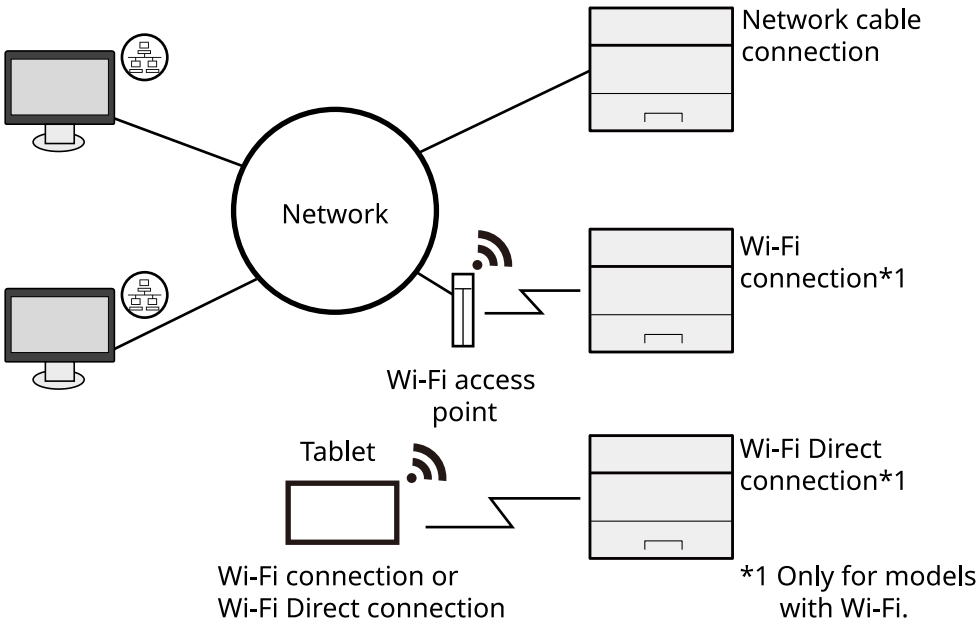

NOTE

If you are using wireless LAN, refer to the following.

➡ Configuring the Wireless Network (page 62)

Cables that Can Be Used

When a network cable is used to connect the machine

Function	Necessary Cable
Printer	LAN cable (10BASE-T, 100BASE-TX, 1000BASE-T)

When a USB cable is used to connect the machine

Function	Necessary Cable
Printer	USB 2.0 compatible cable (Hi-Speed USB compliant, max. 5.0 m, shielded)

IMPORTANT

Using a cable other than a USB 2.0 compatible cable may cause failure.

Connecting Cables

Connecting LAN Cable

IMPORTANT

If the power is on, turn the power switch off.

➡ Power off (page 45)

1 Connect the cable to the machine.

1 Connect the LAN cable to the network interface connector.

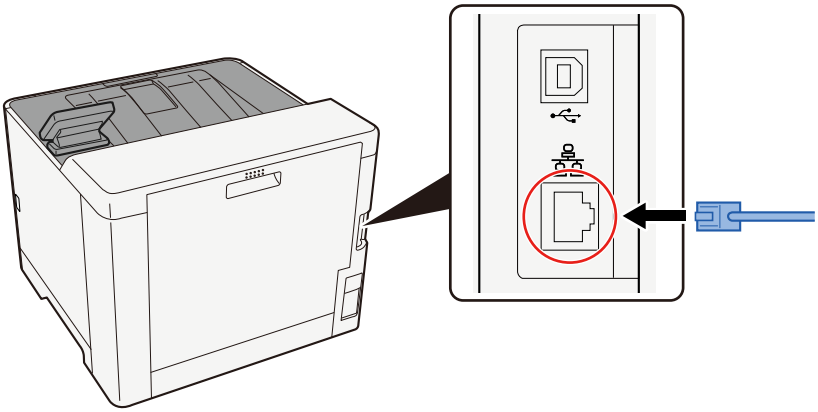

2 Connect the other end of the cable to the hub.

2 Power on the machine and configure the network.

➡ Network Setup (page 60)

Connecting USB Cable

IMPORTANT

If the power is on, turn the power switch off.

➡ Power off (page 45)

1 Connect the cable to the machine.

1 Connect the USB cable to the USB interface connector.

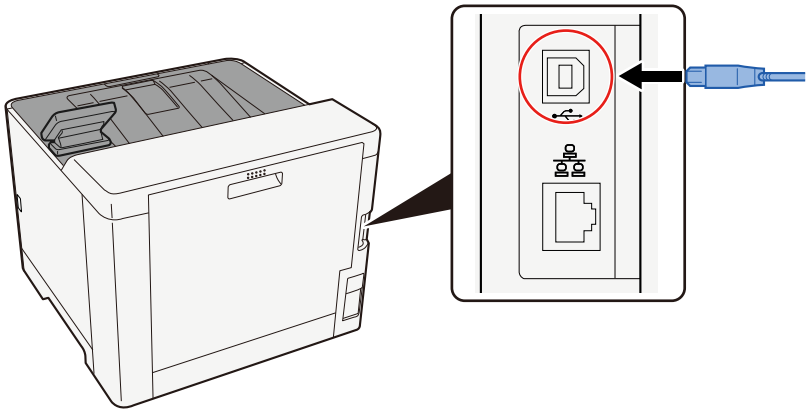

2 Connect the other end of the cable to the PC.

2 Power on the machine.

Connecting the Power Cable

1 Connect the cable to the machine.

Connect one end of the supplied power cable to the machine and the other end to a power outlet.

IMPORTANT

Only use the power cable that comes with the machine.

Power On/Off

Power on

1 **Turn the power switch on.**

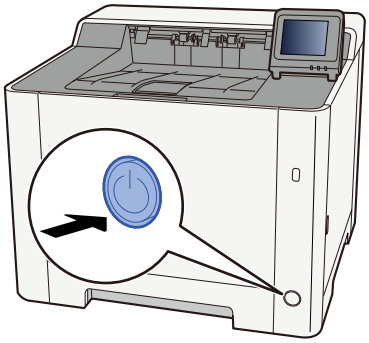

IMPORTANT

When turning off the power switch, do not turn on the power switch again immediately. Wait more than 5 seconds, and then turn on the power switch.

Power off

1 Turn the power switch off.

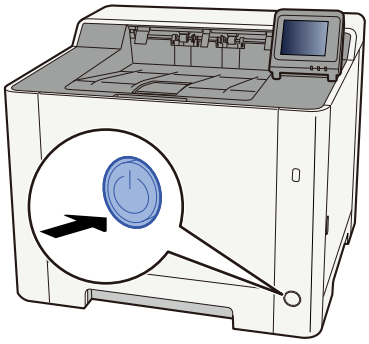

The confirmation message for power supply off is displayed.

It takes approximately 3 minutes for power off.

CAUTION

If this machine will be left unused for an extended period (e.g. overnight), turn it off at the power switch. If the machine will not be used for an even longer period of time (e.g. vacation), remove the power plug from the outlet as a safety precaution.

IMPORTANT

- Remove paper from the cassettes and seal it in the paper storage bag to protect it from humidity.

Using the Operation Panel

Operation Panel Keys

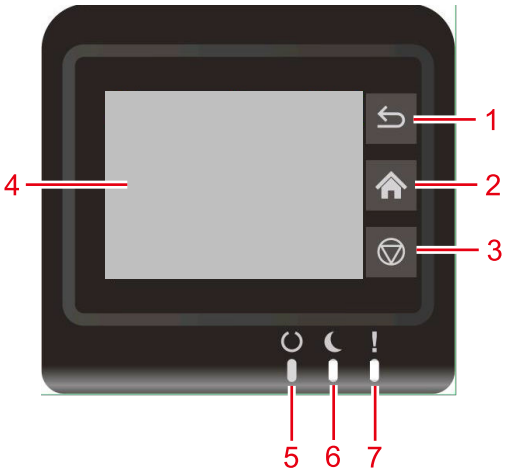

1 [Back] key

Return to the previous screen.

2 [Home] key

Displays the Home screen.

3 [Stop] key

Cancel a printing job.

4 Touch panel

This is a touch panel. Touch this key to make each settings.

5 [Processing] indicator

Lights when printing is possible. Blinks when process the print or an error occurred.

6 [Energy Saver] indicator

In Sleep mode, LED is slow blinking. In Ready mode, LED is Off.

7 [Attention] indicator

Lights or blinks when an error occurs and a job is stopped.

Adjusting the Operation Panel Angle

The angle of the operation panel can be adjusted.

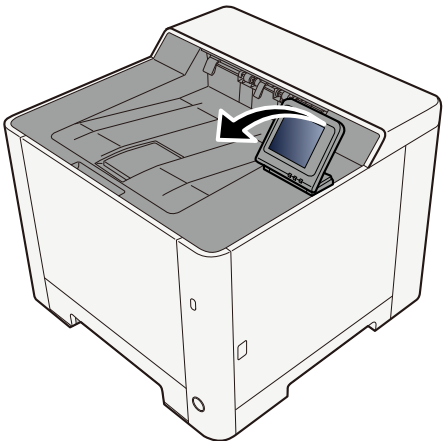

Touch Panel

Using the Touch Panel

This section explains the basic operation of the touch panel.

Tapping

This is the operation used to select an icon or key. In this guide, the tap operation is expressed as "select."

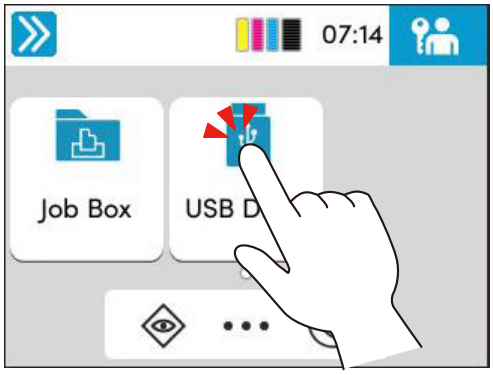

Swiping

This is the operation used to switch between screens and to display items that are not displayed in the list. Move in one direction as if tracing on the screen.

The figure shown below is an example of swiping System Menu Screen. Move the screen up and down.

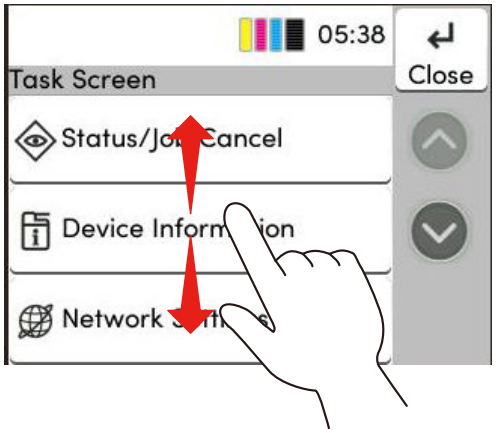

Operating the touch panel

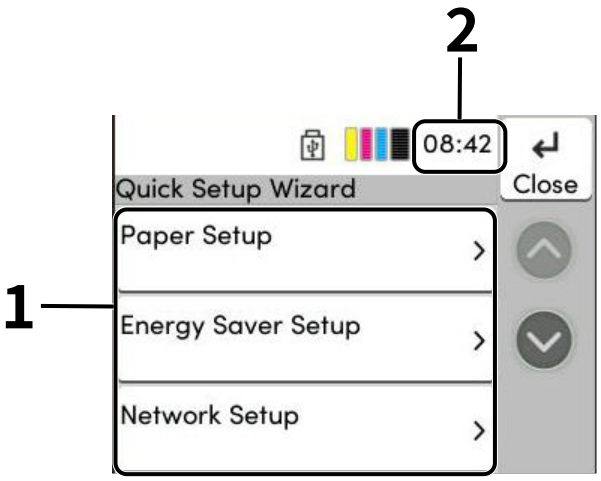

1 Set the Quick Setup items.

2 Displays the time.

Home screen

This screen is displayed by selecting the [Home] key on the operation panel. Touching an icon will display the corresponding screen. You can change the icons to display on the Home screen as well as its background.

➡ Editing the Home Screen (page 51)

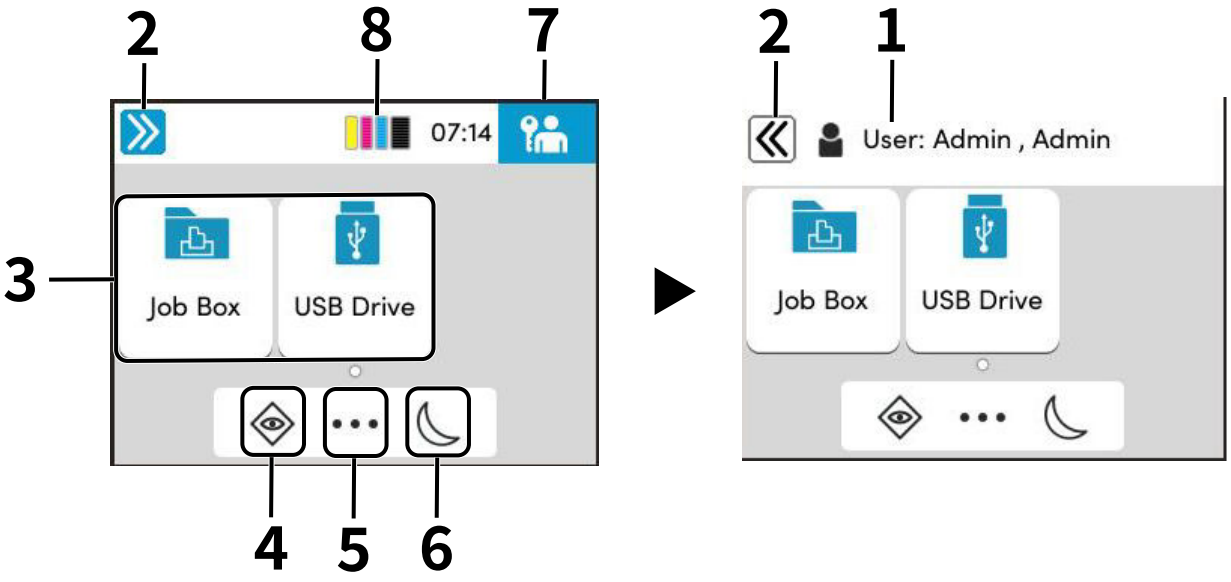

The appearance may differ from your actual screen, depending on your configuration and option settings.

1 Login User Name

Displays the logged in user name. Displayed when user login administration is enabled.

2 Switching key

Switch between displaying and hiding the login user name.

3 Desktop

Displays function icons. Registered function to favorites are also displayed. Icons that are not displayed on the first page will appear by changing the page.

4 [Status] key

Displays the Status screen. If an error occurs, the icon will show "!". Once the error clears, the display will return to normal.

5 [...]

Displays the Task screen.

6 [Energy Saver] key

Puts the machine into Sleep Mode. Recovers from Sleep if in Sleep Mode.

7 [Logout] key

Perform logout. Displayed when user login administration is enabled.

8 Toner Gauge

Displays the remaining amount of Toners.

Editing the Home Screen

You can change the background of the Home screen as well as which icons are displayed.

1 Display the screen.

[Home] key > [...] > [System Menu] > [Device Settings] > [Display Settings]

NOTE

If the user authentication screen appears, log in with a user who has the privilege to configure this setting. If you do not know your login user name or password, please contact your administrator.

2 Configure the function.

The following settings can be configured.

[Display Brightness]

Set the brightness of the touch panel.

Value: 1 (Darker), 2, 3, 4, 5 (Lighter)

[Default Screen]

Select the screen appearing right after start-up (default screen).

Value: [Home], [Status], [Job Box], [Connect to Cloud Access]

Wallpaper

Configure the wallpaper of the Home screen.

Value: Images 1 to 8

Display for Device Information

Shows Device Information. It is possible to check the status of the system and network, the status of consumables such as toner and paper and the situation of the options being used. It is also possible to print various reports and lists.

1 [Home] key > [...] > [Device Information]

2 Check the Device Information.

[Identification/Wired NW]

You can check ID information such as the model name, serial number, host name and location, and the IP address of the wired network.

[Wi-Fi Direct/Wi-Fi]

You can check the status of Wi-Fi connection, such as the device name, network name and IP address.

Displayed when the optional Wireless Network Interface Kit is installed.

[Supplies/Paper]

You can check the availability of toner and paper.

[USB/Bluetooth]

You can check the connection status of USB drive and Bluetooth keyboard.

[Option/Application]

You can check information on the options and applications that are used.

[Capability/Version]

You can check the software version and performance.

[Security]

You can check the security information on the machine.

[Report]

You can print various reports and lists.

[Remote Operation Status]

You can check the status of remote operation.

Display Setting Screen

The following procedure is an example of the Paper Settings screen.

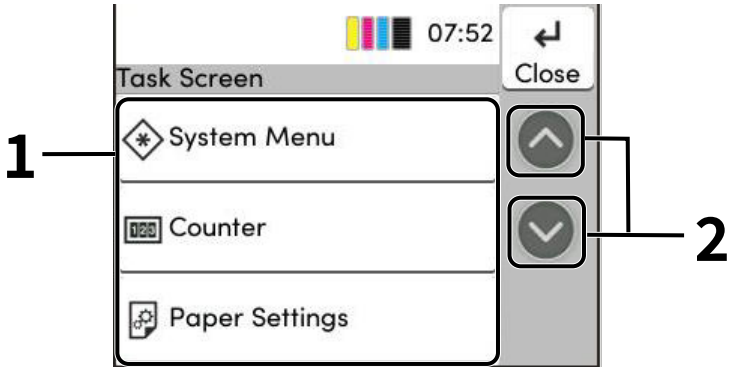

1 Body

Displays various Task screen functions.

2 Arrow Button

Move the screen up and down.

To configure the settings for functions, select the Paper Settings. Select the Arrow Button to display the following functions.

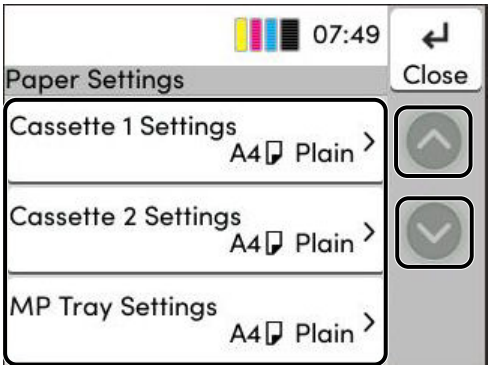

When an On/Off Flip switch is displayed for a function, select the switch to change between ON and OFF.

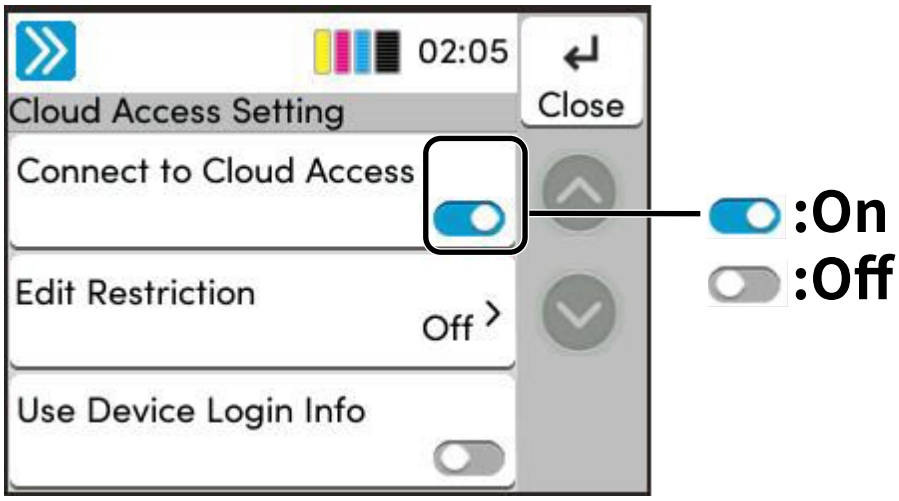

Display of Keys That Cannot Be Set

Keys of features that cannot be used due to feature combination restrictions or non-installation of options are in a non-selectable state.

Normal

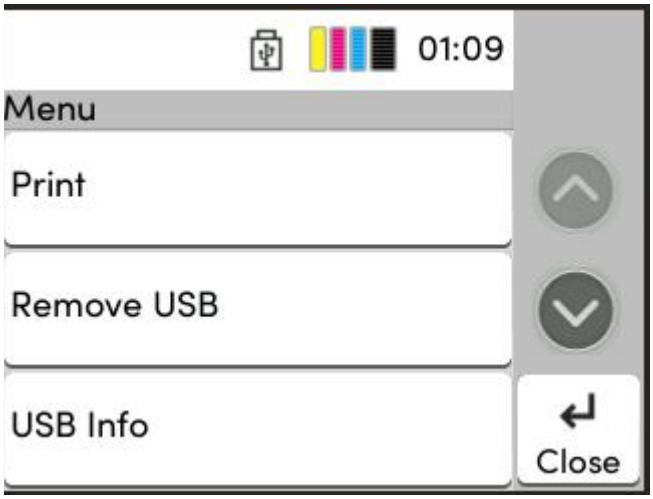

Grayed out

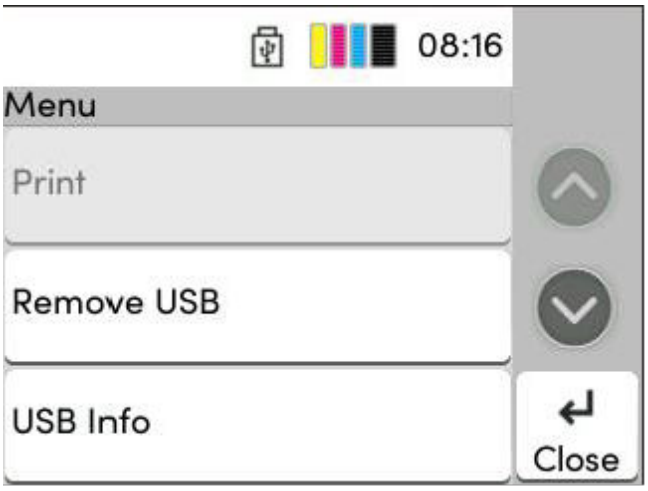

In the following cases, the key is grayed out and cannot be selected.

- Cannot be used in combination with a feature that is already selected.
- Use prohibited by user control.

Help Screen

If you have difficulty operating the machine, you can check how to operate it using the touch panel.

When [Help] is displayed, select [Help] to display the Help screen. The Help screen shows the machine operation.

1 [Home] key > [...] > [Help]

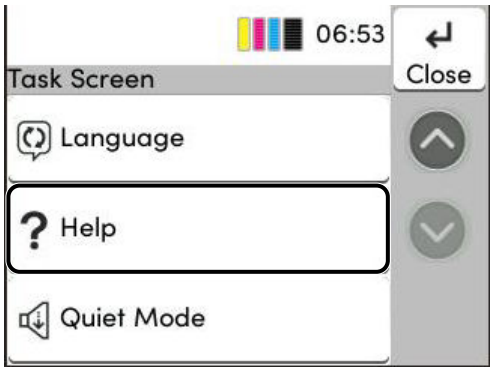

2 Select the items to check from the list.

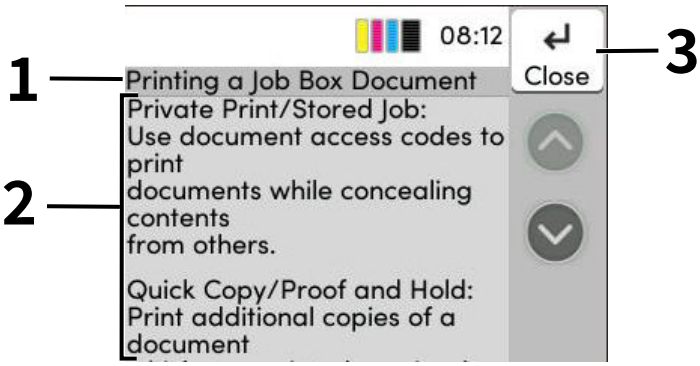

1 Help titles

2 Displays information about functions and machine operation.

3 Closes the Help screen and returns to the original screen.

Login/Logout

Login

1 Enter the login user name and login password to login.

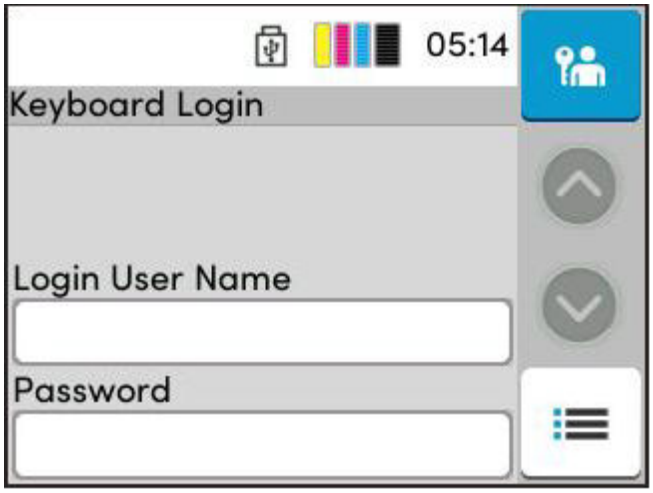

1 Enter the login user name.

NOTE

If you do not know your login User Name, please contact your Administrator.

2 Enter the login password.

➡ Character Entry Method (page 441)

NOTE

If you do not know your login Password, please contact your Administrator.

2 Select [Login].

Logout

1 Select the [Logout] key.

The login user name/login password entry screen is returned.

NOTE

Users are automatically logged out in the following circumstances:

- When the machine enters the sleep state.
- When the auto panel reset function is activated.

Default Settings of the Machine

The default settings of the machine can be changed in System Menu. Before using this machine, configure such settings as date and time, network configuration, and energy saving functions as needed.

NOTE

For settings that are configurable from System Menu, refer to the following:

➡ System Menu (page 192)

Setting Date and Time

Follow the steps below to set the local date and time at the place of installation. When you send an E-mail using the transmission function, the date and time as set here will be printed in the header of the E-mail message. Set the date, time and time difference from GMT of the region where the machine is used.

NOTE

- To make changes after this initial configuration, refer to the following:

  ➡ Date/Time (page 199)

- The correct time can be periodically set by obtaining the time from the network time server.

  ➡ **Command Center RX User Guide**

1 Display the screen.

[Home] key > [...] > [System Menu] > [Device Settings] > [Date/Time]

2 Configure the settings.

Select the function.

[Date and Time]

Set the date and time for the location where you use the machine. If you perform Send as Email, the date and time set on the machine will be displayed on the header.

Value: Year (2000 to 2035), Month (1 to 12), Day (1 to 31), Hour (0 to 23), Minute (0 to 59), Second (0 to 59)

[Date Format]

Select the display format of year, month, and date. The year is displayed in Western notation.

Value: [Month/Day/Year], [Day/Month/Year], [Year/Month/Day]

[Time Zone]

Set the time difference from GMT. Choose the nearest listed location from the list. If you select a region that utilizes summer time, configure settings for summer time.

[Summer Time]

Value: [ON], [OFF]

NOTE

Use the [+] or [-] key to enter numbers.

Displays a numeric keyboard when a value is selected.

Network Setup

Configuring the Wired Network

The machine is equipped with network interface, which is compatible with network protocols such as TCP/IP (IPv4), TCP/IP (IPv6), NetBEUI, and IPSec. It enables network printing on the Windows, Mac, UNIX and other platforms. The configuration methods are as follows:

Configuration Method	Description
Configuring the Connection from the Operation Panel on This Machine	Use Wired Network Settings or Optional Network to configure the network in details from System menu. ➡ Wired Network Settings (page 241)
Configuring Connections on the Web Page	For the equipped network interface, the connection can be set by using Command Center RX. For the IB-50, the connection can be set on the dedicated Web page. ➡ **Command Center RX User Guide**

NOTE

To switch to the network interface other than Wired (default), select the preferred setting on [Primary Network].

➡ Primary Network (Client) (page 257)

For other network settings, refer to the following:

➡ Network Settings (page 232)

TCP/IP (IPv4) setting

NOTE

If the user authentication screen appears, log in with a user who has the privilege to configure this setting. If you do not know your login user name or password, please contact your administrator.

1 **Display the screen.**

[Home] key > [...] > [System Menu] > [Network Settings]> [Wired Network] > [IPv4 Setting]

2 **Configure the settings.**

- When using DHCP server
  - [DHCP]: Configure the settings
- When setting the static IP address
  - [DHCP]: [Off]
  - [Auto-IP]: [Off]
  - [IP Address]: Enter the address.
  - [Subnet Mask]: Enter the subnet mask in decimal representation (0 to 255).

  - [Default Gateway]: Enter the address.
- When using the Auto-IP

  Enter "0.0.0.0" in IP Address.
- When setting the DNS server

  In the following cases, set the IP address of DNS (Domain Name System) server.
  - When using the host name with [DHCP] setting set to [Off].
  - When using the DNS server with IP address that is not assigned by DHCP automatically.

Select [Auto (DHCP)] or [Manual]. If you selected [Manual], enter the [Primary Server] and [Secondary Server].

IMPORTANT

After changing the setting, restart the network from System Menu, or turn the machine OFF and then ON.

➡ Restart Network (page 256)

NOTE

Ask your network administrator for the IP address in advance, and have it ready when you configure this setting.

Configuring the Wireless Network

When the Wi-Fi connection settings are configured, it is possible to print in a wireless network (wireless LAN) environment.

The configuration methods are as follows:

Configuration Method	Description
Configuring the Connection from the Operation Panel on This Machine	Use Wi-Fi Settings to configure the network details from System menu. ➡ Wi-Fi Settings (page 236)
Setting the Connection by Using the Simple Setup Tool	A downloadable tool from the download center https://kyocera.info/. You can set this up by following the wizards.
Setting the Connection by Using the Wi-Fi Setup Tool	This is a tool that can be downloaded from Download Center (https://kyocera.info/). You can configure the connection according to the instructions provided by the wizard. ➡ Wired Connection with LAN Cable Using Wi-Fi Setup Tool (page 63)
Configuring Connections on the Web Page	The connection can be set using Command Center RX. ➡ **Command Center RX User Guide**

NOTE

To switch to the network interface other than Wired (default), select the preferred setting on [Primary Network].

➡ Primary Network (Client) (page 257)

Quick Installer

The download source may direct to an installer or a user support page for configuration.

Wired Connection with LAN Cable Using Wi-Fi Setup Tool

To send the Wi-Fi settings configured in the Wi-Fi Setup Tool to the machine, connect the computer or mobile device with the machine locally. To use a wired LAN cable directly connected to the machine, the Auto-IP (Link-local) address will be assigned to the machine and the computer. This machine applies Auto-IP as the default settings.

NOTE

Configure the settings on the operation panel if your computer supports WPS.

➡ Wi-Fi Settings (page 236)

1 Connect the machine with a computer.

1. Connect the machine with a computer via LAN cable when the machine is powered on.
2. Turn on the computer.

IP addresses (link local addresses) of the machine and computer are generated automatically.

2 Launch the Wi-Fi Setup Tool.

1. Launch your Web browser.
2. Enter "https://kyocera.info/" into the browser's address bar or location bar.

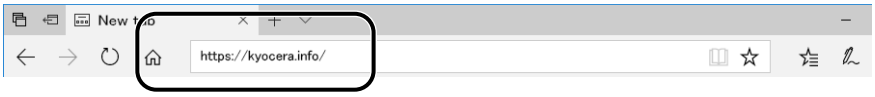

3. Enter and search the product name, and select this product from the candidate list.

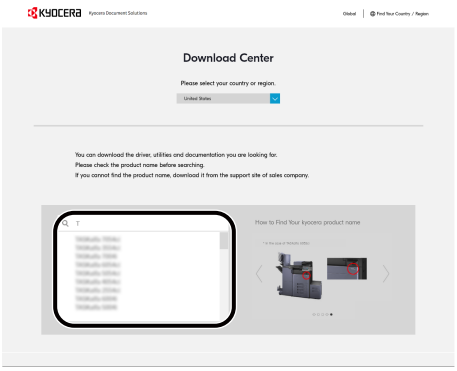

4 Change the selected operating system and its language setting as needed.

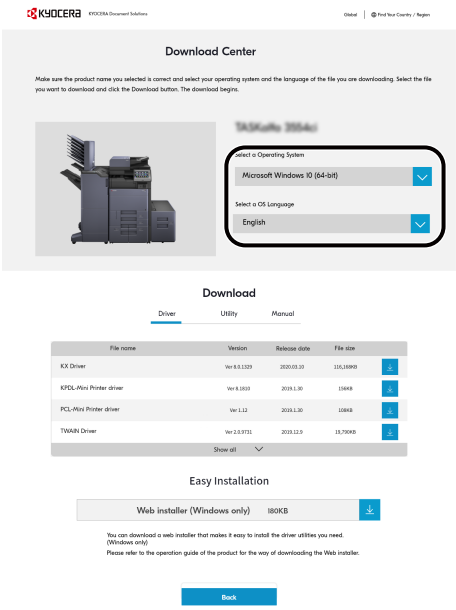

5 Utility tab > [Wi-Fi Setup Tool]

The Wi-Fi Setup Tool will be downloaded.

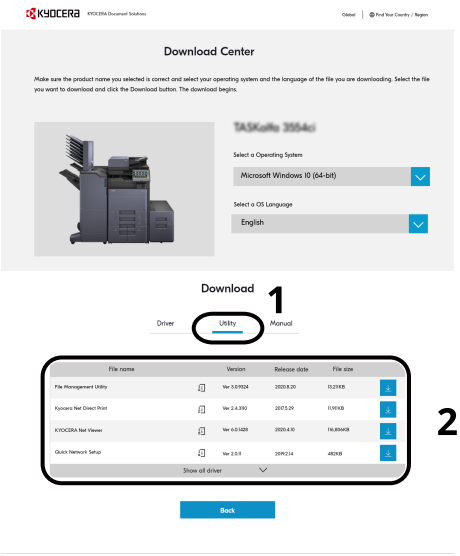

6 Double-click the downloaded installer to launch.

NOTE

- Installation on Windows must be done by a user logged on with administrator privileges.
- If the user account management window appears, click [Yes] (Allow).

3 Configure the settings.

1. [Do not use automatic configuration] > [Next] > [Next]
2. [Use LAN cable] > [Next] > [Next]
3. [Easy setup] > [Next]

   The machine is detected.

NOTE

- Only one machine can be searched using Wi-Fi Setup Tool. It may take times to search the machine.
- If the machine is not detected, select [Advanced setup] > [Next]. Select [Express] or [Custom] as device discovery method and specify the IP address or host name to search the machine.

4. Select the machine > [Next]
5. Select [Use the device settings.] on [Authentication mode], and enter the administrator's login user name and password.
6. Configure the communication settings > [Next]
7. Change the settings of access point as necessary > [Next]

   The network is configured.

Wireless LAN Connection by Wi-Fi Direct Using Wi-Fi Setup Tool

To send the Wi-Fi settings configured in the Wi-Fi Setup Tool to the machine, connect the computer or mobile device with the machine locally.

To use Wi-Fi Direct, confirm that the Wi-Fi Direct is enabled (Wi-Fi Direct is set to [On]) and Restart Network from the operation panel, before your computer will be connected to this machine with Wi-Fi Direct.

NOTE

Configure the settings on the operation panel if your computer supports WPS.

➡ Wi-Fi Settings (page 236)

1 Display the screen.

[Home] key > [...] > [System Menu] > [Network Settings] > [Wi-Fi Direct Settings] > [Wi-Fi Direct]

2 Configure the settings.

Select [ON] > [OK]

3 Restart the network.

[Home] key > [...] > [System Menu] > [Network Settings] > [Restart Network] > [Restart]

4 Connect a computer or a mobile device with the machine.

➡ Setting Wi-Fi Direct (page 69)

5 Launch the Wi-Fi Setup Tool.

1 Launch your Web browser.

2 Enter "https://kyocera.info/" into the browser's address bar or location bar.

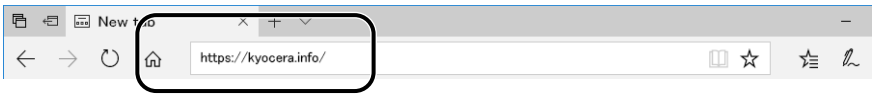

3 Enter and search the product name, and select this product from the candidate list.

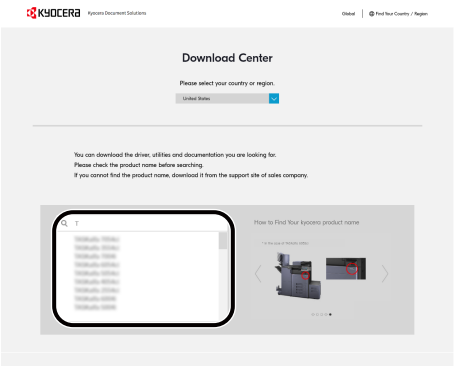

4 Change the selected operating system and its language setting as needed.

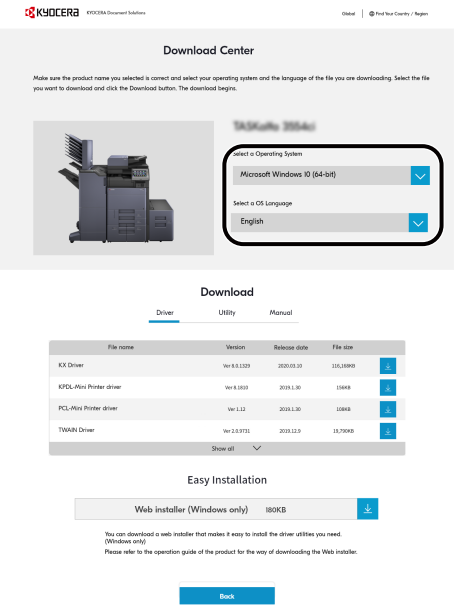

5 Utility tab > [Wi-Fi Setup Tool]

The Wi-Fi Setup Tool will be downloaded.

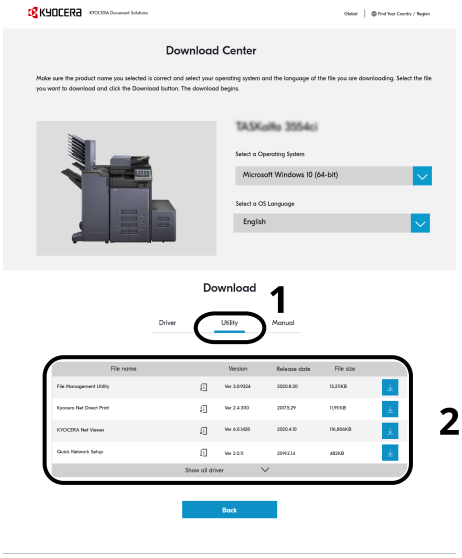

6 Double-click the downloaded installer to launch.

NOTE

- Installation on Windows must be done by a user logged on with administrator privileges.
- If the user account management window appears, click [Yes] (Allow).

6 Configure the settings.

1 [Do not use automatic configuration] > [Next] > [Next]

2 [Wi-Fi Direct] > [Next] > [Next]

3 [Advanced setup] > [Next]

Select [Express] or [Custom] as the device discovery method. You can specify an IP address or hostname as the discovery method.

4 Select the machine > [Next]

5 Select [Use the device settings.] on [Authentication mode], and enter the administrator's login user name and password.

6 Configure the communication settings > [Next]

7 Change the settings of access point as necessary > [Next]

The network is configured.

Setting Wi-Fi Direct

When the connection settings are configured, this enables you to print from the Wi-Fi Direct environment. The configuration methods are as follows:

- Configuring the connection from the operation panel on this machine
- Configuring the connection by using push button

Connecting to Computers or Mobile Devices that Support Wi-Fi Direct

1 **Display the screen.**

[Home] key > [...] > [System Menu] > [Network Settings] > [Wi-Fi Direct Settings] > [Wi-Fi Direct]

2 **Configure the settings.**

Select [ON] > [OK]

3 **Restart the network.**

[Home] key > [...] > [System Menu] > [Network Settings] > [Restart Network] > [Restart]

4 **Specify the machine name from the computer or mobile device.**

If a confirmation message appears on the operation panel of the machine, select [Yes].

The network between this machine and the computer or mobile device is configured.

Connecting to Computers or Mobile Devices Unsupported Wi-Fi Direct

Here, we'll explain the procedures for connecting to iOS mobile devices.

1 Display the screen.

[Home] key > [...] > [System Menu] > [Network Settings]> [Wi-Fi Direct Settings] > [Wi-Fi Direct]

2 Configure the settings.

Select [ON] > [OK]

3 Restart the network.

[Home] key > [...] > [System Menu] > [Network Settings] > [Restart Network] > [Restart]

4 [Home] key > [...] > [Device Information] > [Wi-Fi Direct/Wi-Fi] > [Wi-Fi]

5 Take note of the network name (SSID), IP address, and password of "Wi-Fi Direct"

6 Configure the mobile device.

1. [Settings] > [Wi-Fi]
2. Select the network name (SSID) appeared in step 5 from the list.
3. Enter the password that was provided in step 5 > [Connect]
   The network between this machine and the computer or mobile device is configured.

Configuring the Connection by Using Push Button

When your computer or mobile device does not support Wi-Fi Direct but supports WPS, you can configure the network using push button.

1 Display the screen.

[Home] key > [...] > [System Menu] > [Network Settings]> [Wi-Fi Direct Settings] > [Wi-Fi Direct]

2 Configure the settings.

Select [ON] > [OK]

3 Restart the network.

[Home] key > [...] > [System Menu] > [Network Settings] > [Restart Network] > [Restart]

4 [Home] key > [...] > [Device Information] > [Wi-Fi Direct/Wi-Fi] > [Wi-Fi Direct]

5 Press the push button on the computer or mobile device and select "Wi-Fi Direct"

Select [Push Button Setup] > [OK] on the screen of operation panel.

The network between this machine and the computer or mobile device is configured.

IMPORTANT

You can connect up to ten mobile devices at the same time using Wi-Fi Direct setting. When the devices that support Wi-Fi Direct are connected, if you want to connect other device, disconnect the already connected devices from the network. The disconnection methods are as follows:

- Disconnect the network from the computer or handheld computer
- Disconnecting all devices from the network on the operation panel

  Select the [Home] key > [...] > [Device Information] > [Wi-Fi Direct/Wi-Fi] > [Wi-Fi Direct] > [Device] > [Disconnect] > [Disconnect].
- Configuring auto disconnecting time from the System menu

  ➡ Wi-Fi Direct Setting (page 234)
- Configuring auto disconnecting time from the Command Center RX

  ➡ **Command Center RX User Guide**

Energy Saver function

If a certain period of time elapses after the machine is last used, the machine automatically enters Sleep to minimize power consumption.

Sleep

Panel and all indicators on the operation panel will go out to save a maximum amount of power except the Energy Saver indicator. This status is referred to as Sleep.

If print data is received during Sleep, the machine automatically wakes up and starts printing.

In addition, the machine wakes up when the following operations are performed:

- Select the touch panel.
- Select any key.

Recovery time from Sleep Mode is as follows.

11.0 seconds or less

Note that ambient environmental conditions, such as ventilation, may cause the machine to respond more slowly.

Auto Sleep

Function that automatically switches the machine into Sleep if left idle for a preset time. Switch time has a factory default of 1 minute.

When using this machine, select any key or touch the touch panel.

You will be able to use again within 13 seconds.

Note that ambient environmental conditions, such as ventilation, may cause the machine to respond more slowly.

The procedure for specifying the switch time for the sleep function is explained below.

1 Display the screen

[Home] key > [...] > [System Menu] > [Device Settings]> [Energy/Saver Timer] > [Sleep Timer]

2 Configure the settings.

1 Input the sleep time.

NOTE

The time can be set between 1 and 60 minutes.

Select [+] or [-] key and enter a value.

Displays a numeric keyboard when a value is selected.

2 Select the [OK] key.

Sleep Level (Energy Saver mode and Quick Recovery mode) (models except for Europe)

Sleep can be switched to two modes: Energy Saver mode and Quick Recovery mode. The default setting is Energy Saver mode.

NOTE

- Use the Energy Saver mode under normal circumstances. Use the Quick Recovery mode only when the computer does not recognize USB-connected devices. Note that this will consume more power.

The procedure for selecting a sleep level and using Energy Saver for each function is explained below.

1 Display the screen

[Home] key > [...] > [System Menu] > [Device Settings] > [Energy/Saver Timer] > [Sleep Level]

2 Select the Sleep Level

[Sleep Level] > [Quick Recovery] or [Energy Saver] > [OK] key

If [Energy Saver] is set, perform the following procedure and select whether or not to use the Energy Saver mode for each function.

3 Configure the Sleep Rules

1. [Sleep Rules] > [OK] key
2. Select the function to be set and select On > [OK] key.

   [Card Reader] is displayed when the optional IC Card Authentication Kit is activated.

Power Off Rule (models for Europe)

The Power Off Rule is used to stop the power from automatically turning off.

The default preset time is 20 minutes.

For more information on Power Off Rule settings, refer to the following:

➡ Date/Time (page 199)

➡ Energy Saver/Timer (page 200)

Quick Setup Wizard

The following settings can be configured in a wizard-style screen.

Paper setup

Configure the paper used for printing.

Items	Contents
Cassette	Paper size (Cassette 1 to Cassette 2) Paper type (Cassette 1 to Cassette 2)
Multipurpose Tray	Paper size Paper Type

Energy Saver Setup

Configures sleep mode.

Items	Contents
Sleep Mode	Sleep Timer Sleep Rules Sleep Level
Recovery Mode	Energy Saver Recovery Level

Network Setup

Configures network settings.

Items	Contents
Network	Network Selection*1 Wi-Fi*2*3 DHCP*4 IP Address Subnet Mask*5 Default Gateway*5

*1 This function is displayed only on models equipped with Wi-Fi module.
*2 This function is displayed when [Wi-Fi] is selected on network selection.
*3 When Wi-Fi is selected, [Available Network] list is displayed. Select the access point to use, then select [Connect] to configure.
*4 This function is displayed when Network Selection is set to [Wired Network].
*5 This function is not displayed when DHCP is set to [On].

Security Setup

Specify the security level by Security Quick Setup.

Notification Setup

Set whether the panel notifies that the replacement time for consumables is approaching.

Configuring Settings Quick Setup Wizard

NOTE

If the user authentication screen appears, log in with a user who has the privilege to configure this setting. If you do not know your login user name or password, please contact your administrator.

1 Display the screen.

[Home] key > [...] > [System Menu] > [Quick Setup Wizard]

2 Select a function.

3 Configure the settings.

Start the wizard. Follow the instructions on the screen to configure settings.

NOTE

If you experience difficulty configuring the settings, refer to the following:

➡ Help Screen (page 55)

[End]

Exits the wizard. Settings configured so far are applied.

[<< Previous]

Returns to the previous item.

[Skip>>]

Advances to the next item without setting the current item.

[Next>]

Advances to the next screen.

[< Back]

Returns to the previous screen.

[Finish]

Register the settings and exit the wizard.

Installing Software

To use printer function, download and install the required software from Download Center (https://kyocera.info/).

Published Software (Windows)

Software	Description	Recommended software
KX DRIVER	This driver enables files on a computer to be printed by the machine. Multiple page description languages (PCL XL, KPDL, etc.) are supported by a single driver. This printer driver allows you to take full advantage of the features of the machine. Use this driver to create PDF files.	○
KPDL mini-driver/PCL mini-driver	This is a Microsoft Minidriver that supports PCL and KPDL. There are some restrictions on the machine features and option features that can be used with this driver.	—
KYOCERA Net Viewer	This is a utility that enables monitoring of the machine on the network.	—
Status Monitor 5	This is a utility that monitors the printer status and provides an ongoing reporting function.	○
KYOCERA Net Direct Print	This makes it possible to print a PDF file without starting Adobe Acrobat/Reader.	—
FONTS	These are display fonts that enable the machine's built-in fonts to be used in a software application.	○
Quick Network Setup Tool	A tool to configure the network (wired LAN) settings of the machine.	—
Wi-Fi Setup Tool	A tool to configure the wireless network (wireless LAN) settings of the machine.	—
Kyocera Printer Setup Tool	A tool for connecting your printer to a wireless network, and installing recommended drivers and utilities.	○
Kyocera Cloud Access	A tool for enabling the use of cloud services from the operation panel of this machine.	—

NOTE

- Installation on Windows must be done by a user logged on with administrator privileges.

Installing Software in Windows

Downloading and installing from the website

Download and install a software from our website.

1 Download a software from the website.

1. Launch your Web browser.
2. Enter "https://kyocera.info/" into the browser's address bar or location bar.

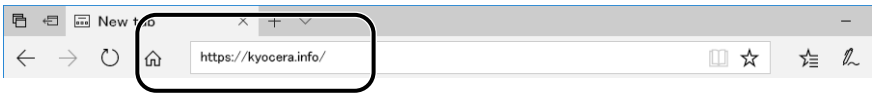

3. Enter and search the product name, and select this product from the candidate list.

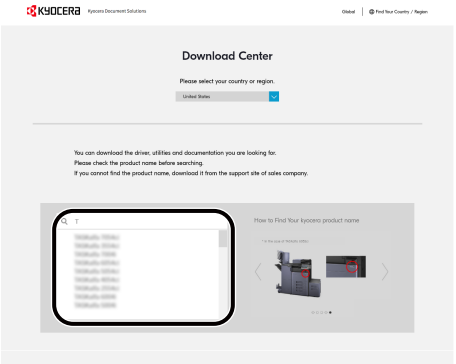

4 Change the selected operating system and its language setting as needed.

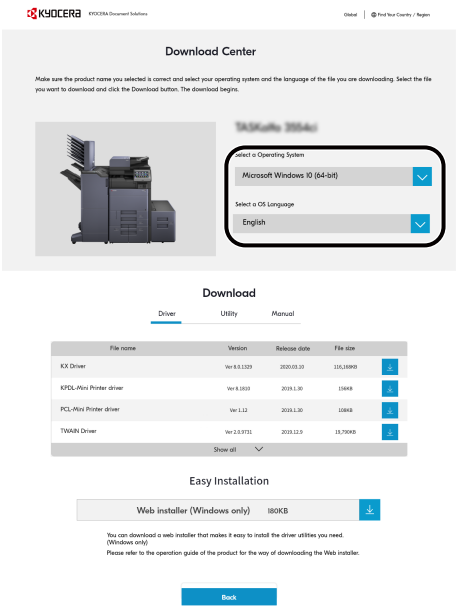

5 Driver tab or Utility tab > of the software you want to download.

An installer of the selected software will be downloaded.

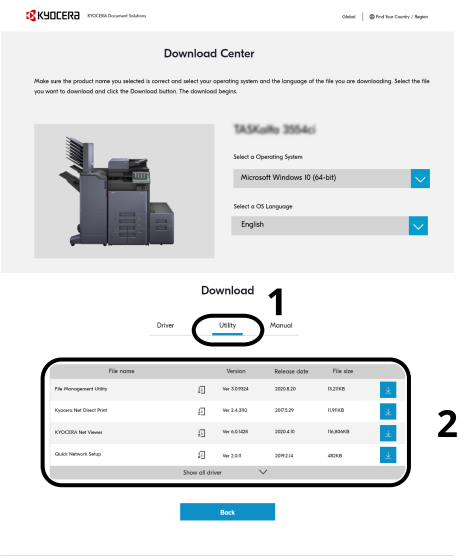

2 Double-click the downloaded installer to launch.

Follow the guidance on the screen to install the software.

NOTE

- Installation on Windows must be done by a user logged on with administrator privileges.
- If the user account management window appears, click [Yes] (Allow).

Using the web installer

Install a software by using a web installer downloaded from our website.

1 Download a software from the website.

1 Launch your Web browser.

2 Enter "https://kyocera.info/" into the browser's address bar or location bar.

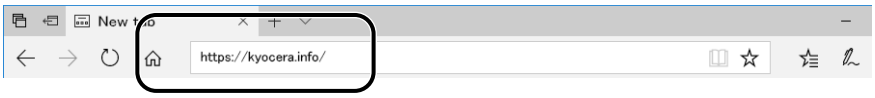

3 Enter and search the product name, and select this product from the candidate list.

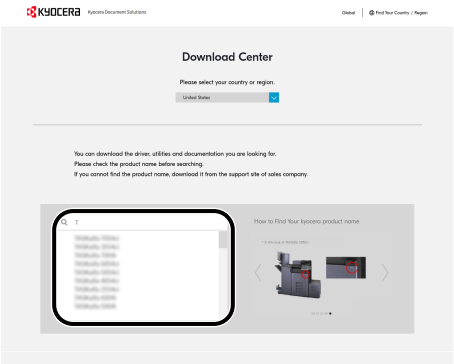

4 Change the selected operating system and its language setting as needed.

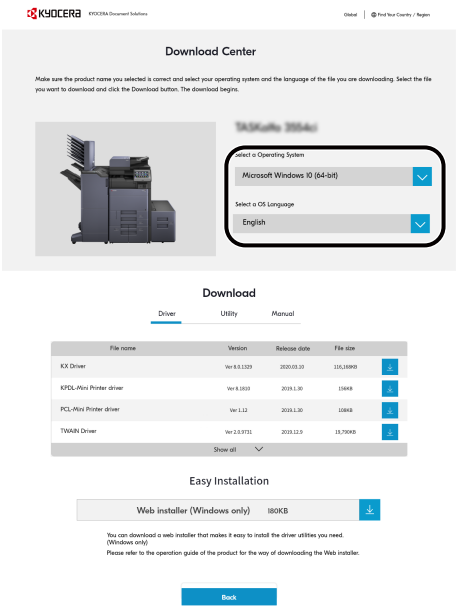

5 Utility tab > ⬇ of "Web installer".

A web installer will be downloaded.

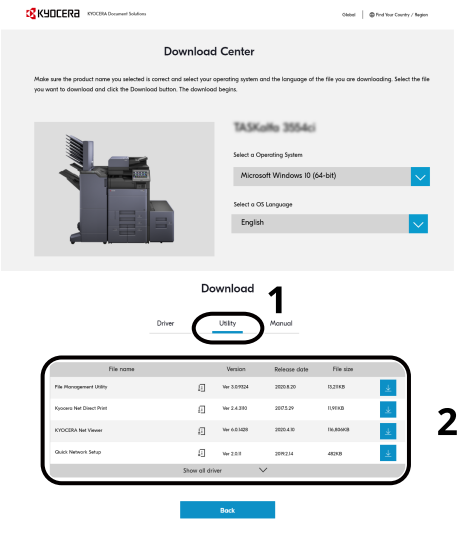

2 Double-click the downloaded installer to launch.

NOTE

- Installation on Windows must be done by a user logged on with administrator privileges.
- If the user account management window appears, click [Yes] (Allow).

3 Display the screen.

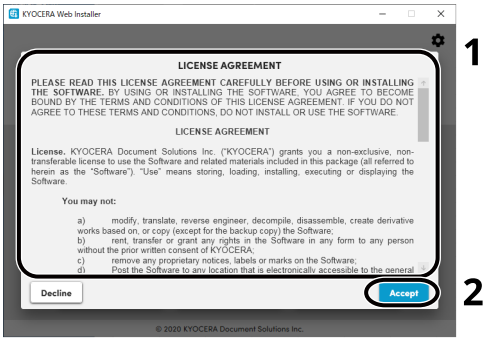

1 Read the license agreement.

2 Click [Accept] if there is no problem.

4 Click [Install].

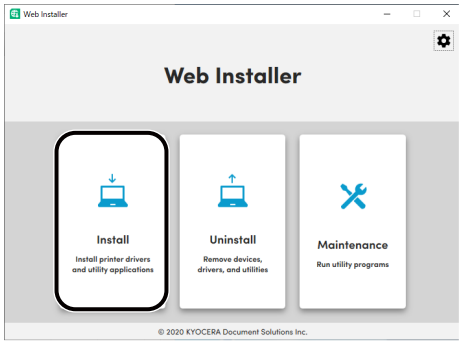

5 Select a model and click [Next].

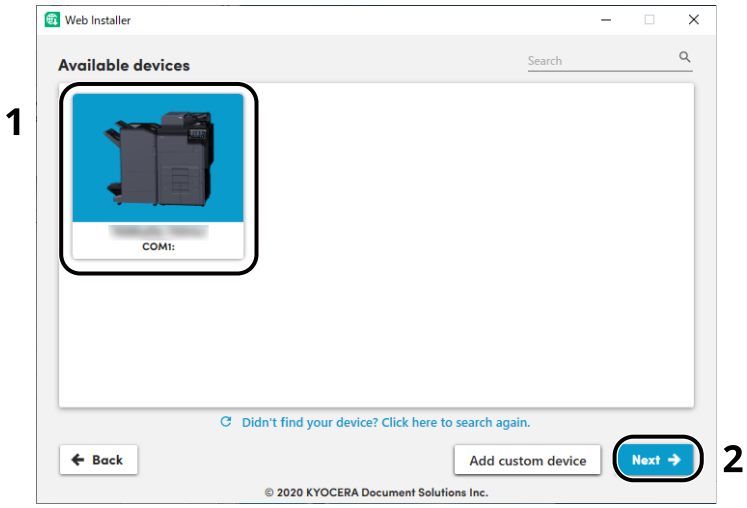

NOTE

- The machine cannot be detected unless it is on. If the computer fails to detect the machine, verify that it is connected to the computer via a network or USB cable.
- If a desired device is not displayed, select [Add custom device] to directly select the device you want to use.

6 Install the software.

1 Select software you want to install.

NOTE

Software recommended to install have ☑ in their checkboxes by default. Change as required.

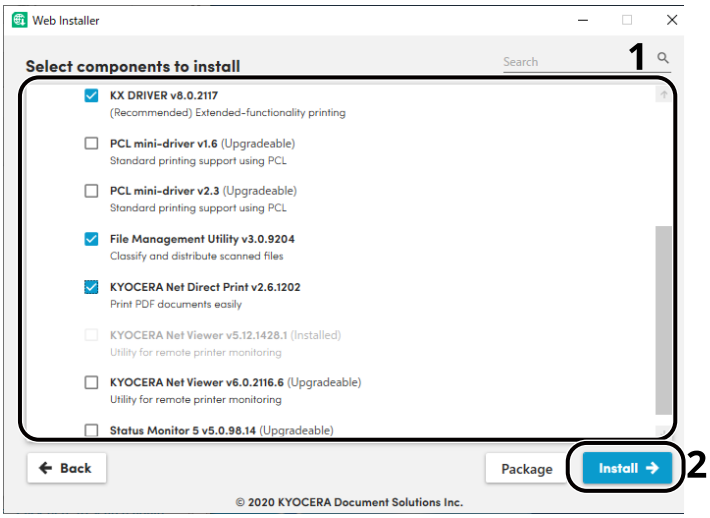

2 Click [Install].

NOTE

If the Windows security screen appears, click [Install this driver software anyway].

7 Finish the installation.

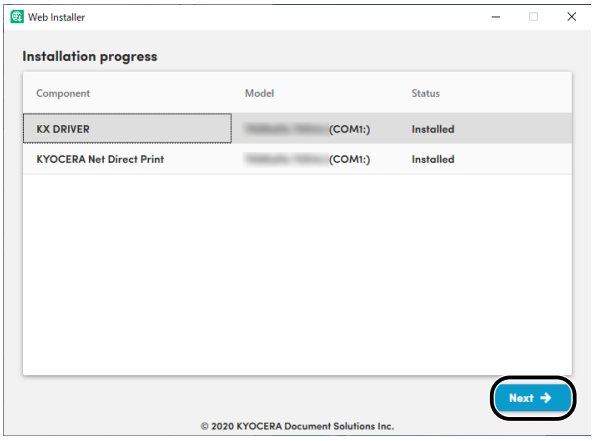

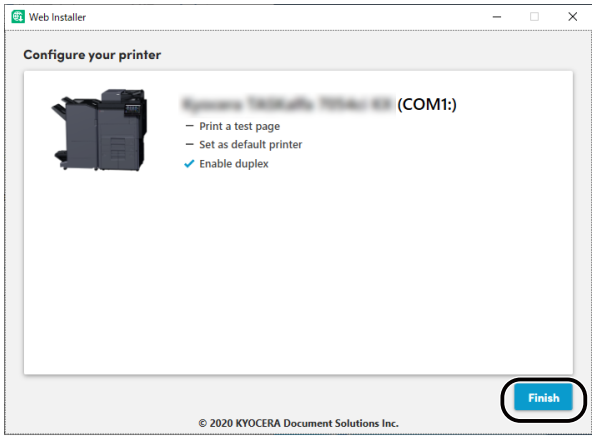

Click [Next] > [Finish] to finish the installation wizard.

If a system restart message appears, restart the computer by following the screen prompts. This completes the printer driver installation procedure.

Uninstalling Windows Software

Use a web installer to uninstall software. The web installer can be downloaded from the Download Center (https://kyocera.info/).

NOTE

For details on how to download the web installer, refer to the following:

➡ Using the web installer (page 81)

1 Double-click the downloaded installer to launch.

NOTE

Uninstallation on Windows must be done by a user logged on with administrator privileges.

2 Display the screen.

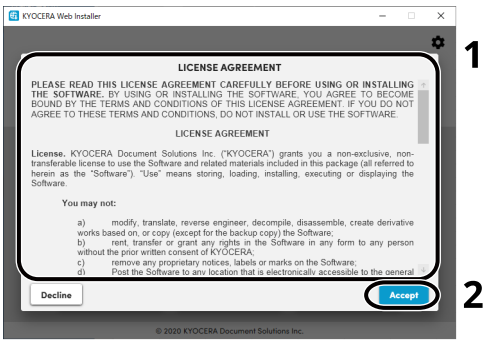

1 Read the license agreement.

2 Click [Accept] if there is no problem.

3 Click [Uninstall].

4 Uninstall the software.

1 Select software you want to uninstall.

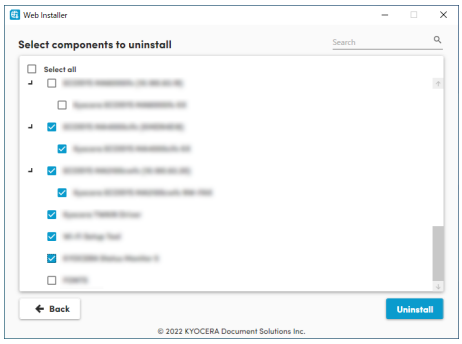

2 Click [Uninstall].

5 Finish uninstalling.

Click [Finish].

Restart the system for the uninstall to take effect.

Installing Software on a Mac OS Computer

A printer driver can be installed for a Macintosh computer.

NOTE

- Installation on Mac OS must be done by a user logged on with administrator privileges.
- When installing for a Mac, set the machine's emulation to [KPDL] or [KPDL (Auto)].
  ➡ Printer (page 223)
- If connecting by Bonjour, enable Bonjour in the machine's network settings.
  ➡ Bonjour (page 252)
- In the Authenticate screen, enter the name and password used to log in to the operating system.
- When printing via AirPrint, you do not have to install the software.

1 Download a software from the website.

1. Launch your Web browser.
2. Enter "https://kyocera.info/" into the address bar.

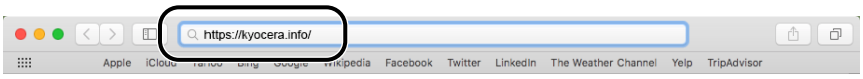

3. Enter and search the product name, and select this product from the candidate list.

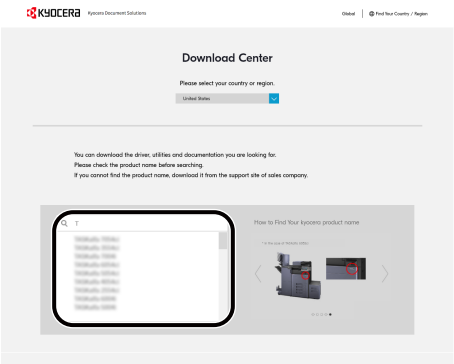

4 Change the selected operating system and its language setting as needed.

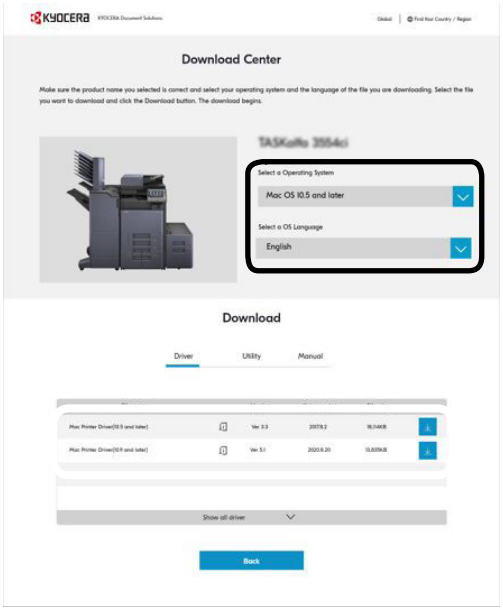

5 Driver tab > "Mac Printer Driver (x.x and later)"

An installer of the selected software will be downloaded.

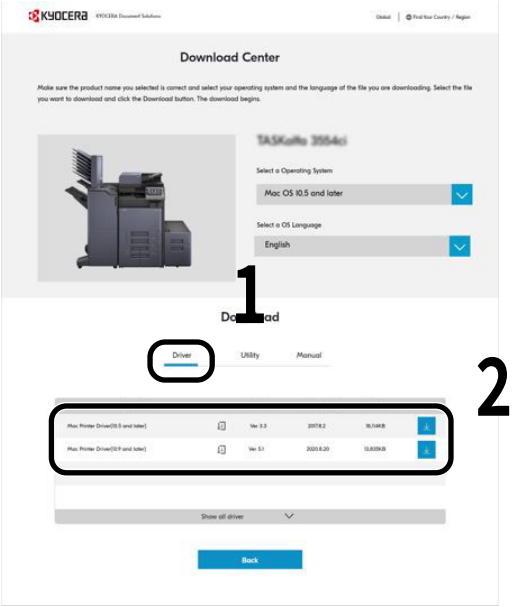

2 Install the Printer Driver.

Double click to launch the downloaded installer.

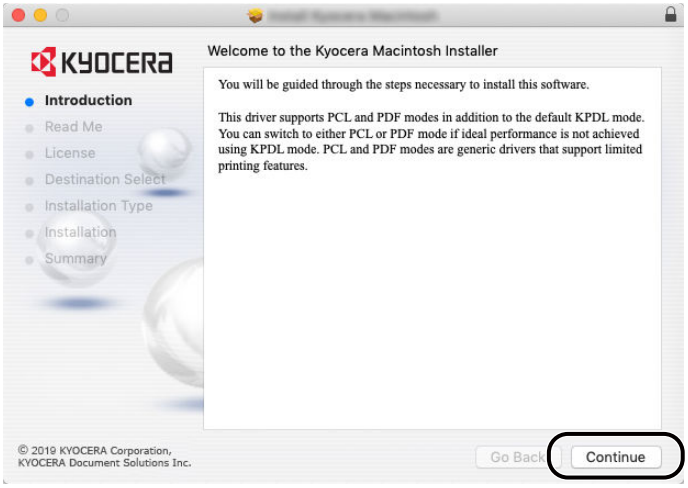

Install the printer driver as directed by the instructions in the installation software. This completes the printer driver installation.

If a USB connection is used, the machine is automatically recognized and connected. If an IP connection is used, the settings below are required.

3 Configure the printer.

1 Open System Preferences and add the printer.

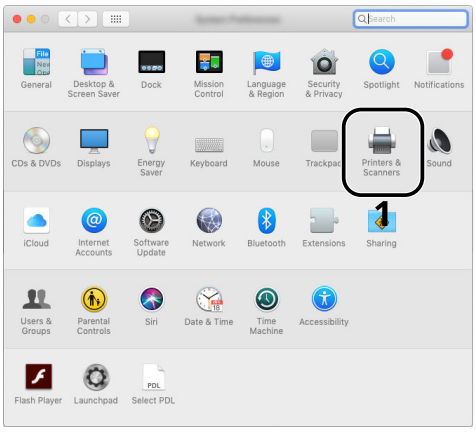

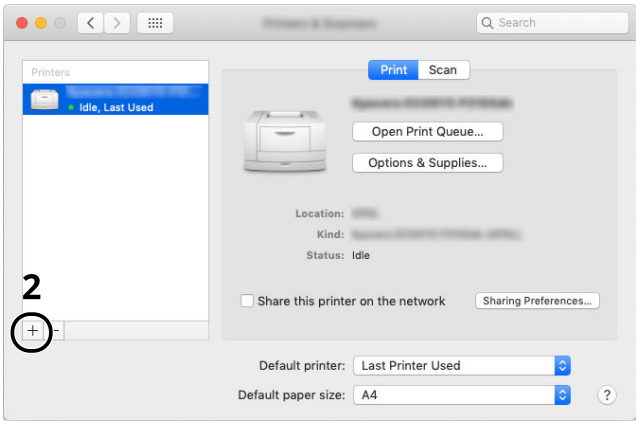

2 Select [Default] and click the item that appears in "Name" and then select the driver in Use.

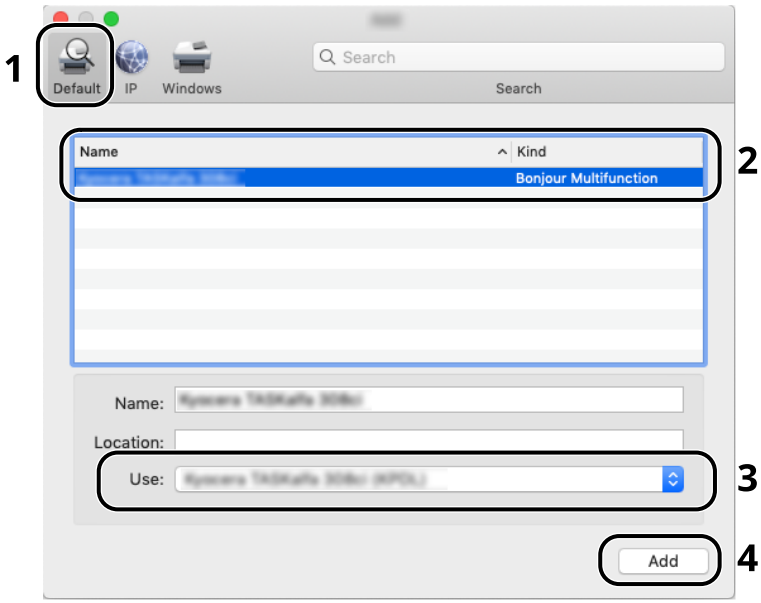

The selected machine is added.

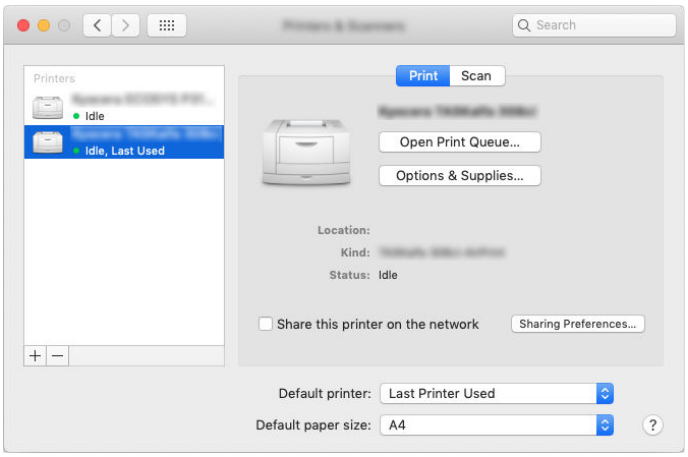

NOTE

When using an IP connection, click the IP icon for an IP connection and then enter the host name or IP address. The number entered in "Address" will automatically appear in "Name". Change as required.

3 Select the options equipped with the machine.

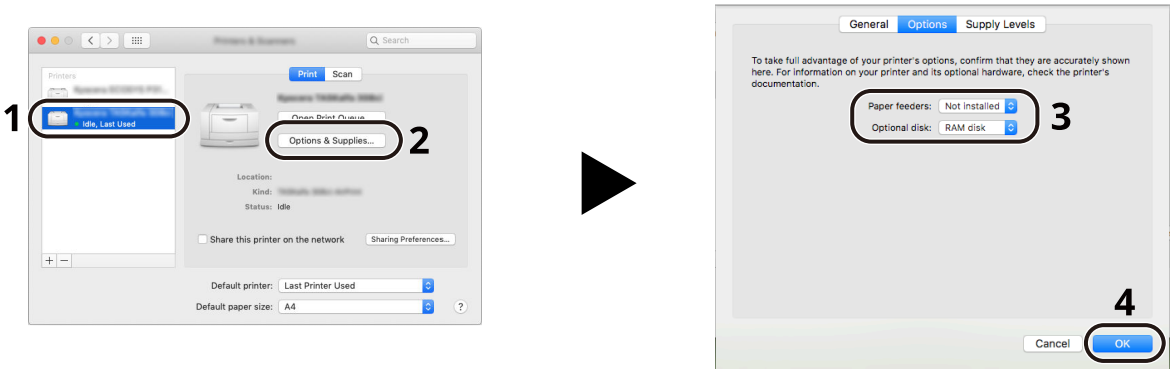

Checking the Counter

Check the number of sheets printed.

1 Display the screen.

[Home] key > [...] > [Counter]

2 Check the counter

Select the item you wish to check.

Additional Preparations for the Administrator

Administrator Privileges Overview

This machine is shipped with two default users registered one with Machine Administrator privileges, and another with Administrator privileges. The user with Machine Administrator privileges and the user with Administrator privileges can configure important settings for the machine. The differences in the privileges are as follows:

User with Machine Administrator privileges

This user can configure the product’s network settings, security settings such as user registration, and the machine's security level.

User with Administrator privileges

This user can configure the product’s network settings, and security settings such as user registration. This user cannot set the machine’s security level.

Log in as Machine Administrator or Administrator

The user with Machine Administrator privileges or the user with Administrator privileges must log in to configure important settings for the product, such as network settings and security settings. The factory default login user name and login password are set as shown below.

Machine Administrator

User Name	DeviceAdmin
Login User Name	ECOSYS PA2600cwx, ECOSYS PA2600cx: 2600 ECOSYS PA2101cwx, ECOSYS PA2101cx: 2100
Login Password	For security purposes, the individual passwords listed on the sheet provided with this product are set at the time of shipment. ECOSYS PA2600cwx, ECOSYS PA2600cx: 2600 ECOSYS PA2101cwx, ECOSYS PA2101cx: 2100

Administrator

User Name	Admin
Login User Name	Admin
Login Password	xxxxxxxxxx (Serial Number) ➡ Checking the Equipment's Serial Number (page 2)

IMPORTANT

To ensure security, be sure to change the factory default user name, login user name, and login password. Also, change your password regularly.

➡ Changing User Properties for Local Users (Admin, DeviceAdmin, PowerUser) (page 284)

Strengthening the Security

This machine is shipped with two default users registered one with Machine Administrator rights, and another with Administrator rights. Logging in as this user will allow you to configure all settings; therefore, please change the login user name and password.

In addition, this machine is equipped with user authentication function, which can be configured to limit the access to this machine to only those who have a registered login name and password. For details, refer to the following:

➡ User Authentication and Accounting (User Login, Job Accounting) (page 278)

NOTE

This product has an optional security chip called TPM (UG-51) (Trusted Platform Module). The encryption key used to encrypt confidential information on this machine is stored in a dedicated storage area on the TPM chip. Since this storage area cannot be read from outside the TPM, confidential information can be safely protected.

Restrict the users of the machine

- User Login

  ➡ Overview of User Login Administration (page 279)
- Authentication Security

  ➡ Authentication Security (page 281)
- Auto Panel Reset

  ➡ Auto Panel Reset (page 200)
- ID Card Settings

  The optional IC Card Authentication Kit is required.

  ➡ ID Card Settings (page 292)

Output the document stored in the machine at the time when user operates the device via operation panel

- Remote Printing

  ➡ Printer (page 223)

Completely delete the data on the machine before disposing of the machine

- Data Sanitization

  ➡ [Data Sanitization] (page 261)

Protect the transmission from interception and wiretapping

- IPP over TLS

  ➡ [IPP over TLS] (page 247)
- HTTPS

  ➡ [HTTPS] (page 247)
- SMTP (Email TX)

  ➡ Email (page 221)

- POP3 (Email TX)

  ➡ [POP3 (Email RX)] (page 246)
- Enhanced WSD over TLS

  TWAIN/WIA
- IPSec

  ➡ [IPSec] (page 255)
- SNMPv3

  ➡ [SNMPv3] (page 248)

Verify the software in the machine

- Software Verification

  ➡ Security Settings (page 259)

Preventing from execution of the unauthorized programs

- Allowlisting

  ➡ Security Settings (page 259)

Command Center RX

If the machine is connected to the network, you can configure various settings using Command Center RX. This section explains how to access Command Center RX, and how to change security settings and the host name.

➡ **Command Center RX User Guide**

NOTE

To fully access the features of the Command Center RX pages, you must enter the user name and password and log in. Entering the predefined administrator password allows the user to access all pages, including document box and settings on the navigation menu.

Settings that the administrator and general users can configure in Command Center RX are as follows.

Setting	Description	Administrator	General User
Device Information/ Remote Operation	The machine's structure can be checked.	Yes	Yes
Job Status	Displays all device information, including print jobs, storing jobs, scheduled jobs, and job log history.	Yes	Yes
Document Box	Add or delete document boxes, or delete documents within a document box. The logged in user may not be able to configure some settings, depending on the privilege of the user.	Yes	Yes
Device Settings	Configure the advanced settings of the machine.	Yes	No
Function Settings	Configure the advanced function settings.	Yes	No
Network Settings	Configure the network advanced settings.	Yes	No
Security Settings	Configure the security advanced settings.	Yes	No
Management Settings	Configure the advanced management settings.	Yes	No

Accessing Command Center RX

1 Display the screen.

1 Launch your Web browser.

2 In the address or location bar, enter the machine's IP address or the host name.

Click in the following order to check the machine's IP address and the host name.

In the home screen [...] > [Device Information] > [Identification/Wired NW] > [Wired Network]

Example: https://10.180.81.1 (in the case of /IP address)

https://MFP001 (if the host name is MFP001)

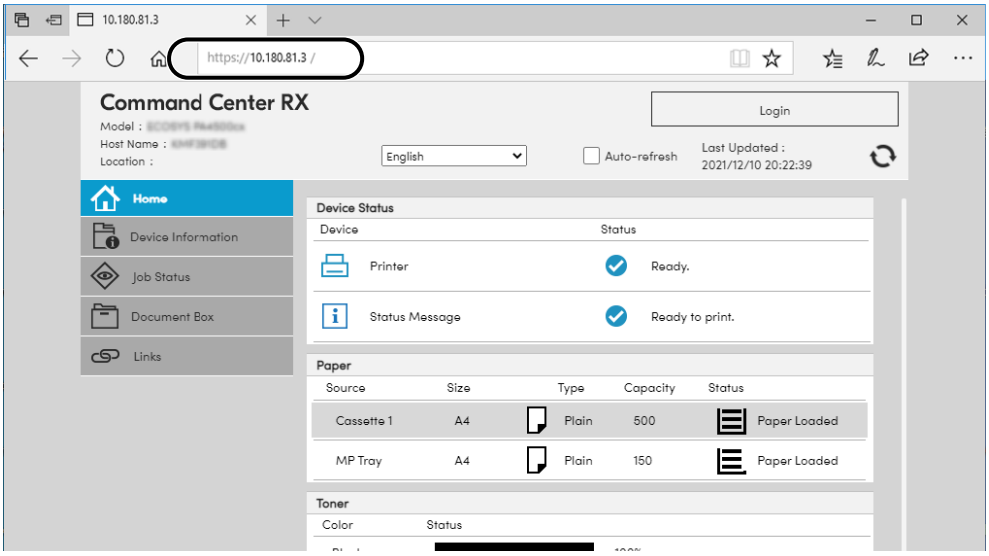

The web page displays basic information about the machine and Command Center RX as well as their current status.

NOTE

If the screen "There is a problem with this website's security certificate." is displayed, configure the certificate.

➡ **Command Center RX User Guide**

You can also continue the operation without configuring the certificate.

2 Configure the settings.

Select a category from the navigation bar on the left of the screen.

NOTE

To fully access the features of the Command Center RX pages, you must enter the user name and password and log in. Entering the predefined administrator password allows the user to access all pages, including document box and settings on the navigation menu.

Changing Security Settings

1 Display the screen.

1 Launch your Web browser.

2 In the address or location bar, enter the machine's IP address or the host name.
Click in the following order to check the machine's IP address and the host name.
In the home screen [...] > [Device Information] > [Identification/Wired NW] > [Wired Network]

3 Log in with administrator privileges.

4 Click [Security Settings].

2 Configure the settings.

From the [Security Settings] menu, select the setting you want to configure.

NOTE

For details on settings related to certificates, refer to the following:

➡ **Command Center RX User Guide**

Changing Device Information

1 Display the screen.

1. Launch your Web browser.
2. In the address or location bar, enter the machine's IP address or the host name.
   Click in the following order to check the machine's IP address and the host name.
   In the home screen [...] > [Device Information] > [Identification/Wired NW] > [Wired Network]
3. Log in with administrator privileges.

4. Click [System] from the [Device Settings] menu.

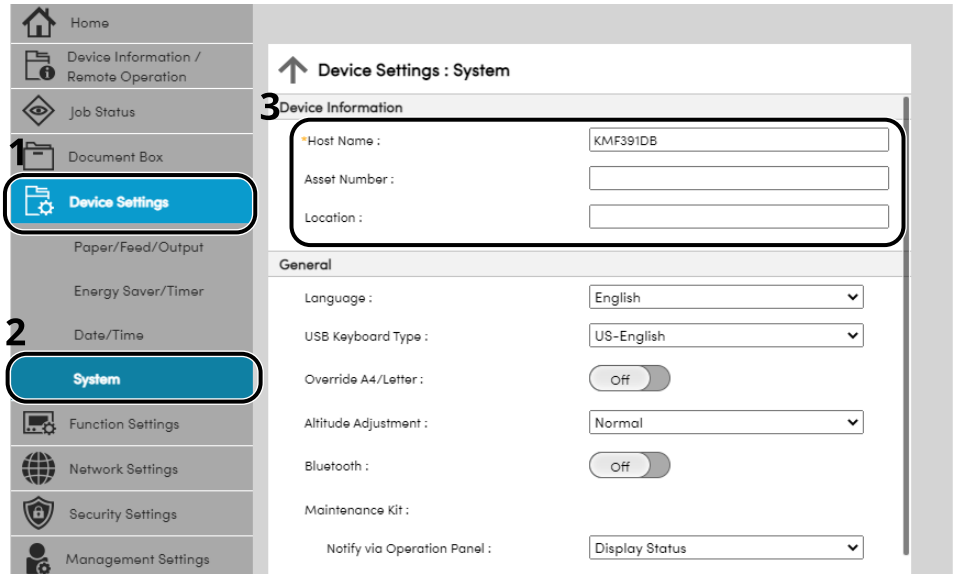

2 Specify the host name.

Enter the device information, and then click [Submit].

IMPORTANT

After changing the setting, restart the network or turn the machine OFF and then ON. To restart the network interface card, click [Reset] in the [Management Settings] menu, and then click [Restart Network] in "Restart".

SMTP and E-mail Settings

By configuring the SMTP settings, it is possible to send the images as E-mail attachments and to send E-mail notices when jobs have been completed. To use this function, this machine must be connected to a mail server using the SMTP protocol.

In addition, configure the following.

SMTP settings

"SMTP Protocol" and "SMTP Server Name" in "SMTP"

The sender address when the machine sends E-mails

"Sender Address" in "E-mail Send Settings"

The setting to limit the size of E-mails

"E-mail Size Limit" in "E-mail Send Settings"

The procedure for specifying the SMTP settings is explained below.

1 Display the screen.

Display the SMTP Protocol screen.

1. Launch your Web browser.
2. In the address or location bar, enter the machine's IP address or the host name.

   Click in the following order to check the machine's IP address and the host name.

   In the home screen [...] > [Device Information] > [Identification/Wired NW] > [Wired Network]
3. Log in with administrator privileges.

4. Click [Protocol] from the [Network Settings] menu.

2 Configure the settings.

Set "SMTP (E-mail TX)" to [On] in the "Send Protocol".

3 Display the screen.

Display the E-mail Settings screen.

Click [E-mail] from the [Function Settings] menu.

4 Configure the settings.

Enter "SMTP" and "E-mail Send Settings" items.

SMTP

Set to send e-mail from the machine.

[SMTP Protocol]

Displays the SMTP protocol settings. Check that [SMTP Protocol] is set to [On]. If [Off] is set, click [Protocols] and set the SMTP protocol to [On].

[SMTP Server Name]

Enter the host name or IP address of the SMTP server. Be sure to enter the items.

[SMTP Port Number]

Specify the port number to be used for SMTP. The default port number is 25.

[SMTP Server Timeout]

Set the amount of time to wait before time-out in seconds.

[Authentication Protocol]

To use SMTP authentication, enter the user information for authentication.

[Connection Test]

Tests to confirm the proper operation under the settings without sending an email.

[Domain Restrictions]

To restrict the domains, click the [Domain List] and enter the domain names of addresses to be allowed or rejected. Restriction can also be specified by e-mail address.

POP3

You don't need to set the items when you only use the function of sending e-mail from the machine. Set the items if you want to enable the function of receiving e-mail on the machine.

➡ **Command Center RX User Guide**

E-mail Send Settings

[E-mail Size Limit]

Enter the maximum size of E-mail that can be sent in kilobytes. When E-mail size is greater than this value, an error message appears and E-mail sending is canceled. Use this setting if you have set E-mail Size Limit for SMTP server. If not, enter a value of 0 (zero) to enable E-mail sending regardless of the size limit.

[Sender Address]

Specify the sender address for when the machine sends E-mails, such as the machine administrator, so that a reply or non-delivery report will go to a person rather than to the machine. The sender address must be entered correctly for SMTP authentication. The maximum length of the sender address is 256 characters. Be sure to enter the items.

[Signature]

Enter the signature. The signature is free form text that will appear at the end of the E-mail body. It is often used for further identification of the machine. The maximum length of the signature is 512 characters.

[SMTP Authentication and Sender Address]

Select either [Use Device Setting] or [Use Login User Information].

[Function Default]

Change the function default settings in [Common/Job Defaults] page.

5 Click [Submit].

3 Preparation before Use

Load Paper

Loading Paper

Load paper in the cassettes and multipurpose tray.

For the paper load methods for each cassette, refer to the page below.

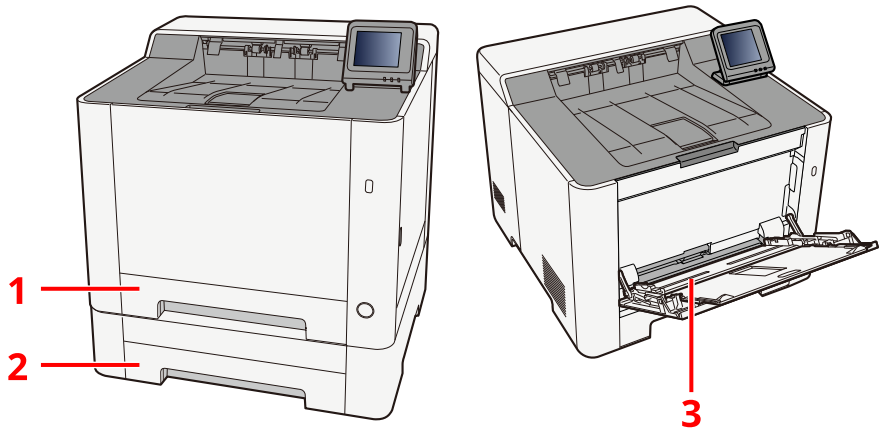

No.	Name	Paper Size	Paper Type	Capacity	Page
1	Cassette 1	A4, B5, A5-R, A6, B6, Legal, Oficio II, Letter, Executive, Statement-R, Folio, 16K, 216mmx340mm, B5 (ISO), Custom	Plain, Preprinted, Bond, Recycled, Rough, Letterhead, Color, Prepunched, Thick, High Quality, Custom 1 to 8	250 sheets (80 g/m^2)	➡ Loading in the Cassettes (page 110)
2	Cassette 2				

No.	Name	Paper Size	Paper Type	Capacity	Page
3	Multipurpose Tray	A4, A5, A5-R, A6, B5, B6, Letter, Legal, 216 × 340 mm, Executive, Oficio II, 16K, Statement-R, Folio, ISO B5, Envelope Monarch, Envelope #10, Envelope DL, Envelope C5, Envelope #9, Envelope #6 3/4, Hagaki (Cardstock), Oufukuhagaki (Return postcard), Youkei 2, Youkei 4, Nagagata 3, Nagagata 4, Younaga 3, Custom (70 × 148 to 216 × 356 mm)	Plain, Transparency (OHP Film), Rough, Vellum, Preprinted, Bond, Recycled, Letterhead, Color, Prepunched, Thick, High Quality, Labels, Envelope, Hagaki (Cardstock), Coated, Custom 1 to 8	50 sheets (80 g/m^2)	

NOTE

- The number of sheets that can be held varies depending on your environment and paper type (thickness).
- Do not use inkjet printer paper or paper with special coatings. (Doing so may lead to failures such as paper jams.)
- Use paper made for color printing if you want higher-quality color prints.

Precaution for Loading Paper

When you open a new package of paper, fan the sheets to separate them slightly prior to loading in the following steps.

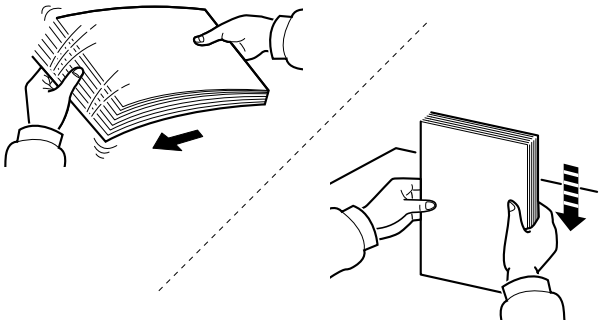

Fan the paper, then tap it on a level surface. In addition, note the following points.

- If the paper is curled or folded, straighten it before loading. Paper that is curled or folded may cause a jam.
- Avoid exposing opened paper to high temperatures and high humidity as dampness can be a cause of problems. Seal any remaining paper after loading in the multipurpose tray or cassettes back in the paper storage bag.
- If the machine will not be used for a prolonged period, protect all paper from humidity by removing it from the cassettes and sealing it in the paper storage bag.

IMPORTANT

If you print onto used paper, make sure that it is not stapled or clipped. This may damage the machine or cause poor image quality.

NOTE

If you use special paper such as letterhead, paper with holes or paper with pre-prints like logo or company name, refer to the following:

➡ About Paper (page 445)

Paper Specifications available in the Cassettes

The cassettes can hold plain paper, recycled paper or color paper. The number of sheets that can be loaded in each cassette is shown below.

Cassette	Capacity
Cassette 1	250 sheets (Plain paper: 80 g/m^2)
Cassette 2	250 sheets (Plain paper: 80 g/m^2)

For details of the supported paper sizes, refer to the following:

➡ Choosing the Appropriate Paper (page 446)

For the paper type setting, refer to the following:

➡ Media Type Setting (page 210)

IMPORTANT

- The Cassettes 1 to 2 can hold paper with weight between 60 to 220 g/m^2 .
- If you are using a paper weight of 106 g/m^2 or more, set the media type to Thick and set the weight of the paper you are using.

Loading in the Cassettes

1 **Pull the Cassette 1 completely out of the machine.**

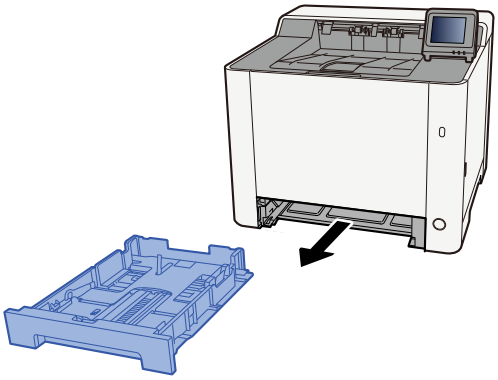

NOTE

When pulling the cassette out of the machine, ensure it is supported and does not fall out.

2 Adjust the cassette size.

1 Adjust the paper length guide to the paper size required. Press the paper length adjusting tab and slide the guides to the paper size required.

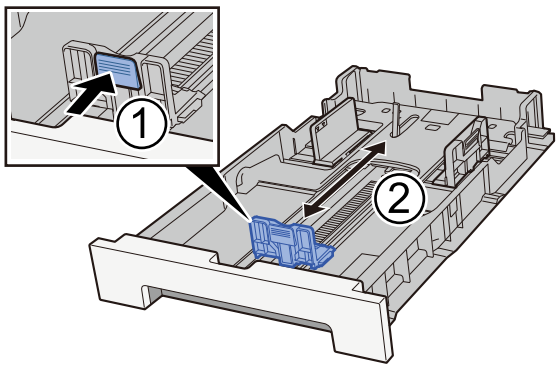

2 Adjust the paper length guides to the paper size required. Press the paper length adjusting tab and slide the guides to the paper size required. (Cassette 1 only)

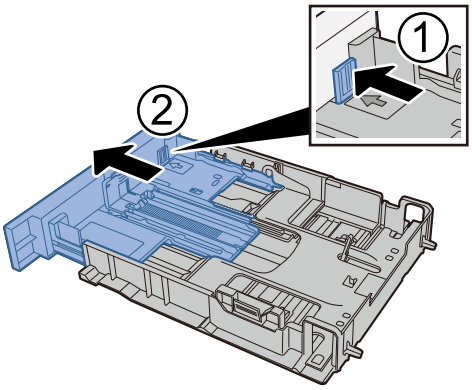

NOTE

It is necessary to set the paper size from the operation panel.

➡ Specifying Paper Size and Media Type (page 117)

3 Load paper.

1 Fan the paper, then tap it on a level surface to avoid paper jams or skewed printing.

2 Load the paper in the cassette.

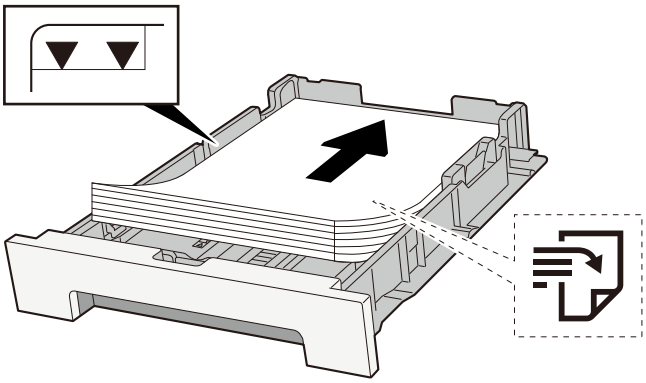

IMPORTANT

- Load the paper with the print side facing up.
- After removing new paper from its packaging, fan out the paper before loading it in the cassettes.

  ➡ Precaution for Loading Paper (page 108)
- Before loading the paper, be sure that it is not curled or folded. Paper that is curled or folded may cause paper jams.
- Ensure that the loaded paper does not exceed the level indicator (see illustration above).
- If paper is loaded without adjusting the paper length guide and paper width guide, the paper may skew or become jammed.

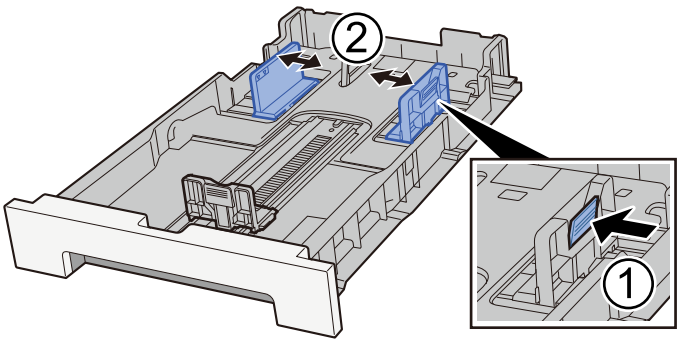

4 Gently push the Cassette 1 back in.

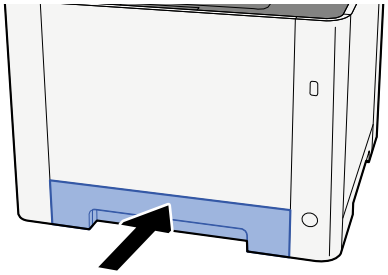

NOTE

When Folio, Oficio II or Legal is used, the cassette will extend out from the machine.

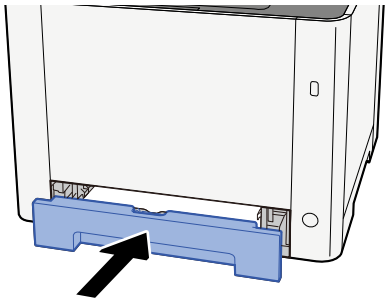

5 Display the screen.

[Home] key > [...] > [System Menu] > [Device Settings] > [Paper Feeding]

6 Configure the function

Select the paper size and paper type.

➡ [Cassette 1 Settings] to [Cassette 2 Settings] (page 205)

➡ [MP Tray Settings] (page 207)

Paper Specifications available in the Multipurpose Tray

Up to 100 sheets of normal paper (64 g/m ^{2}) can be added to the multipurpose tray.

For details of the supported paper sizes, refer to the following:

➡ Choosing the Appropriate Paper (page 446)

For the paper type setting, refer to the following:

➡ Media Type Setting (page 210)

Be sure to use the multipurpose tray when you print on any special paper.

IMPORTANT

- If you are using a paper weight of 106 g/m^2 or more, set the media type to Thick and set the weight of the paper you are using.

The capacity of the multipurpose tray is as follows.

- Plain paper (64 g/m ^{2}), recycled paper, and colored paper: 100 sheets
- Thick paper (209 g/m ^{2}): 15 sheets
- Thick paper (157 g/m ^{2}): 30 sheets
- Thick paper (104.7 g/m ^{2}): 50 sheets
- Hagaki (Cardstock): 30 sheets
- Envelope DL, Envelope C5, Envelope #10, Envelope #9, Envelope #6 3/4, Envelope Monarch, Youkei 4, Youkei 2: 5 sheets
- Coated: 30 sheets

NOTE

- When you load custom size paper, enter the paper size by referring to the following:

  ➡ [MP Tray Settings] (page 207)

Loading Paper in the Multipurpose Tray

1 Open the multipurpose tray.

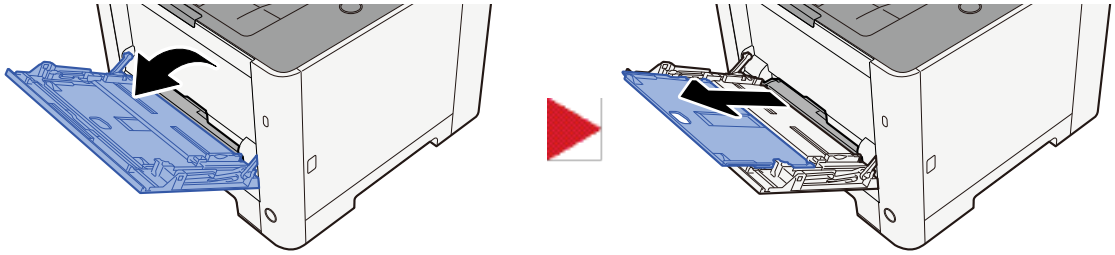

2 Adjust the multipurpose tray size.

Paper sizes are marked on the multipurpose tray.

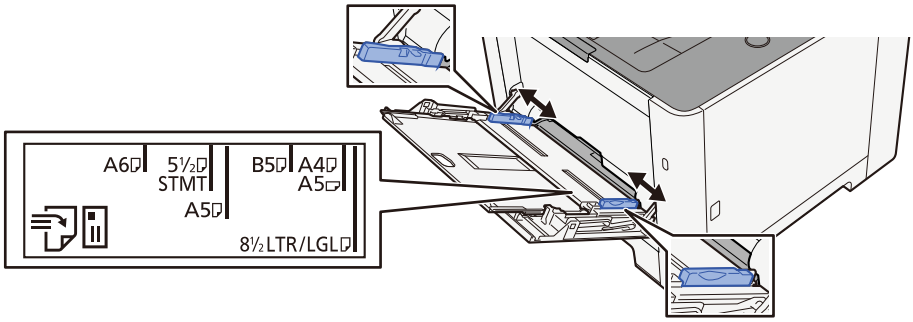

3 Load paper.

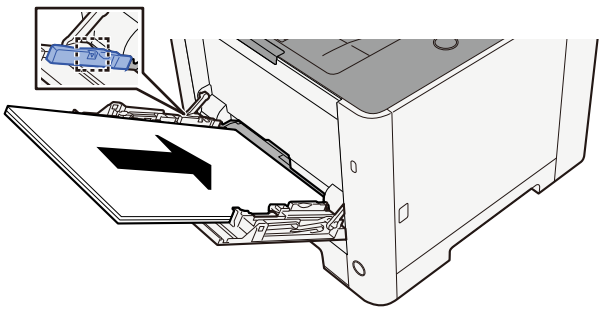

Insert the paper along the paper width guides into the tray until it stops.

After removing new paper from its packaging, fan the paper before loading it in the multipurpose tray.

➡ Precaution for Loading Paper (page 108)

IMPORTANT

- When loading the paper, keep the print side facing up.
- Curled paper must be uncurled before use.
- When loading paper into the multipurpose tray, check that there is no paper left over in the tray from a previous job before loading the paper. If there is just a small amount of paper left over in the multipurpose tray and you want to add more, first remove the left-over paper from the tray and include it with the new paper before loading the paper back into the tray.
- If there is a gap between the paper and the paper width guides, readjust the guides to fit the paper in order to prevent skewed feeding and paper jams.
- Ensure that the loaded paper does not exceed the load limits.

When you load envelopes or cardstock in the multipurpose tray, load the paper with the print side facing up. For the procedure for printing, refer to the Printer Driver User Guide.

➡ **Printer Driver User Guide**

Example: When printing the address.

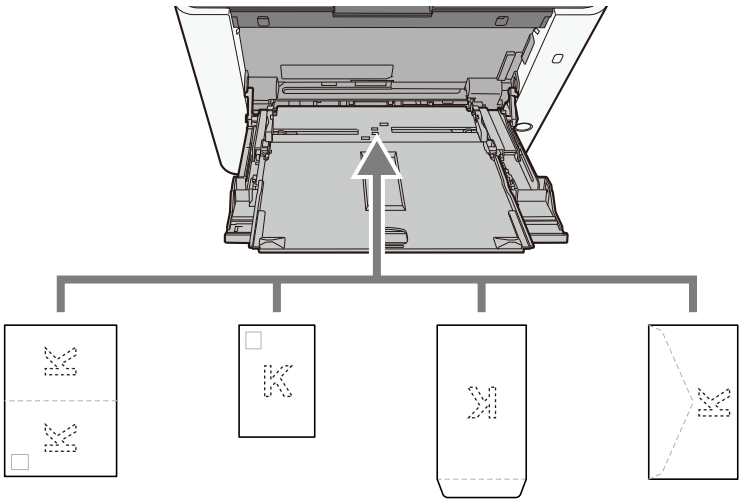

IMPORTANT

- Use unfolded Oufukuhagaki (Return postcard).
- How to load envelopes (orientation and facing) will differ depending on the type of envelope. Be sure to load it in correctly, otherwise printing may be done in the wrong direction or on the wrong face.

NOTE

When you load envelopes in the multipurpose tray, select the envelope type by referring to the following:

➡ [MP Tray Settings] (page 207)

4 Specify the type of paper loaded in the multipurpose tray using the operation panel.

➡ Specifying Paper Size and Media Type (page 117)

Specifying Paper Size and Media Type

The default paper size setting for cassette 1, for the multipurpose tray and for the optional paper feeder (cassettes 2) is "A4", and the default media type setting is "Plain". To change the type of paper to be used in cassettes, specify the paper size and media type setting.

Cassette Paper Size and Media Type

Item	Description
[Media Type]	**Value (Cassette 1, 2)** [Plain], [Rough], [Recycled], [Preprinted], [Bond], [Color], [Prepunched], [Letterhead], [Thick], [High Quality], [CUSTOM 1] to [CUSTOM 8] To change to a media type other than “Plain,” refer to the following. ➡ Media Type Setting (page 210) When a paper weight that cannot be loaded in the cassette is set for a media type, that media type does not appear.
[Other Paper Size]	Select the paper size. **Value (Cassette 1, 2)** [Executive], [Letter], [Legal], [A4], [B5], [A5-R], [A5], [A6], [B6], [ISO B5], [Custom], [Oficio II], [216x340mm], [16K], [Statement], [Folio]

Item	Description
[Custom Paper]	Register the custom size used for Cassette 1 to Cassette 2. [Home] key > [...] > [System Menu] > [Device Settings] > [Paper Feeding] > [Custom Paper Settings] Value Cassette1: **[mm]** X: 105 to 216 mm (in 1 mm increments) Y: 148 to 356 mm (in 1mm increments) **[inch]** X: 4.13 to 8.50" (in 0.01" increments) Y: 5.83 to 14.02" (in 0.01" increments) Value Cassette 2: **[mm]** X: 105 to 216 mm (in 1 mm increments) Y: 148 to 356 mm (in 1mm increments) **[inch]** X: 4.13 to 8.50" (in 0.01" increments) Y: 5.83 to 14.02" (in 0.01" increments) X=Width, Y=Length 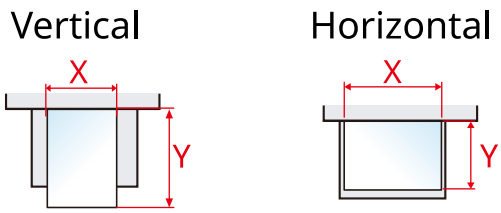

Specifying the Cassette Paper Size and Media Type

If the paper size is matched to the following, set the media type.

- A4
- A5
- B5
- Letter
- Legal
- A6 (Cassette 1 only)
- Statement

If the paper size is different from the above, set the paper size and media type.

1 Display the screen

[Home] key > [...] > [System Menu] > [Device Settings] > [Paper Feeding] > Select Cassette

NOTE

[Cassette 2] is displayed when the optional paper feeder is installed.

2 Specifying Media Type

1. Select [Media Type]
2. Select the media type, and select the [OK] key.

3 Specify the paper size

1. Select [Paper Size]
2. Select the paper size, and select the [OK] key.
   If [Custom Paper Settings] is selected, set the paper width and length with the following procedure.
3. With [Customer Paper Settings] > Select Cassette
4. Input the paper length (Y).

   NOTE

   Use the numeric keys or select the [+] or [-] key to enter a number.

5. Input the paper length (X) .

   NOTE

   Use the numeric keys or select the [+] or [-] key to enter a number.

Multipurpose Tray Paper Size and Media Type

Item	Description
[Paper Size]	Select the paper size. Value: [Envelope Monarch], [Envelope #10], [Envelope DL], [Envelope C5], [Executive], [Letter], [Legal], [A4], [B5], [A5-R], [A5], [A6], [B6], [Envelope #9], [Envelope #6 3/4], [ISO B5], [Custom (70 x 148 to 216 x 356 mm)], [Cardstock], [Oufuku], [Oficio II], [216x340mm], [16K], [Statement-R], [Statement], [Folio], [Youkei 2], [Youkei 4]
[Media Type]	Select the media type. Value: [Plain], [Transparency], [Preprinted], [Labels], [Bond], [Recycled], [Letterhead], [Color], [Prepunched], [Envelope], [Cardstock], [Coated], [Thick], [High Quality], [CUSTOM 1] to [CUSTOM 8] To change to a media type other than “Plain,” refer to the following. ➡ Media Type Setting (page 210)

Specifying Multipurpose Tray Paper Size and Media Type

Set the size of paper and media type used in the multipurpose tray.

1 Display the screen

[Home] key > [...] > [System Menu] > [Device Settings]> [Paper Feeding] > Select MP Tray

2 Specify the paper size

1. Select [Paper Size]
2. Select the paper size, and select the [OK] key.

3 Specifying Media Type

1. Select [Media Type]
2. Select the media type, and select the [OK] key.

Paper Stopper

When using paper A4/Letter or larger, open the paper stopper shown in the figure.

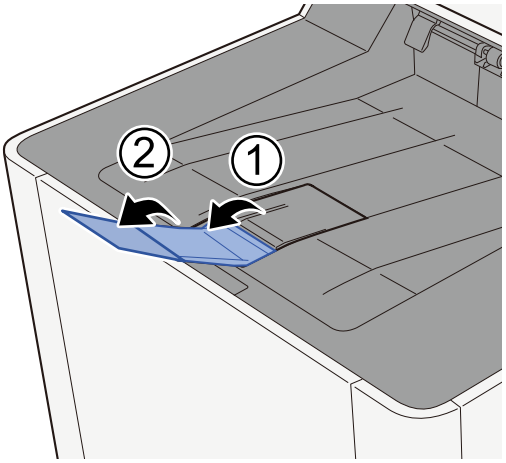

4 Print from PC

Printer Driver Print Settings Screen

The printer driver print settings screen allows you to configure a variety of print-related settings.

➡ **Printer Driver User Guide**

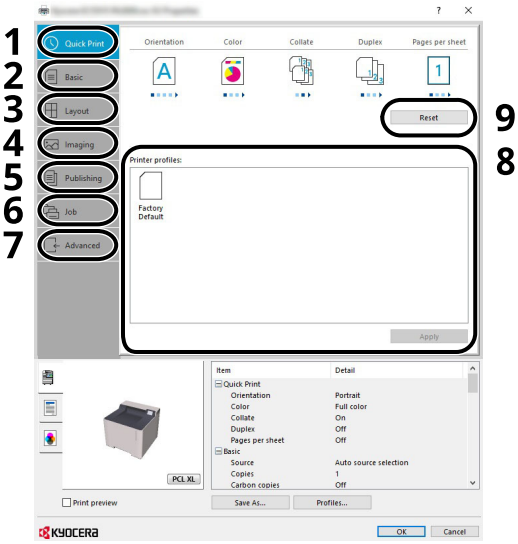

1 [Quick Print] tab

Provides icons that can be used to easily configure frequently used functions. Each time you click an icon, it changes to an image resembling the print results and applies the settings.

2 [Basic] tab

This tab groups basic functions that are frequently used. You can use it to configure the paper size, destination, and duplex printing.

3 [Layout] tab

This tab lets you configure settings for printing various layouts, including booklet printing, combine mode, poster printing, and scaling.

4 [Imaging] tab

This tab lets you configure settings related to the quality of the print results.

5 [Publishing] tab

This tab lets you create covers and inserts for print jobs and put inserts between sheets of OHP film.

6 [Job] tab

This tab lets you configure settings for saving print data from the computer to the machine. Regularly used documents and other data can be saved to the machine for easy printing later. Since saved documents can be printed directly from the machine, this function is also convenient when you wish to print a document that you don't want others to see.

7 [Advanced] tab

This tab lets you configure settings for adding text pages or watermarks to print data.

8 [Profiles]

Printer driver settings can be saved as a profile. Saved profiles can be recalled at any time, so it's a convenient practice to save frequently used settings.

9 [Reset]

Click to revert settings to their initial values.

Displaying the Printer Driver Help

The printer driver includes Help. To learn about print settings, open the printer driver print settings screen and display Help as explained below.

1 Click the [?] button in the upper right corner of the screen.

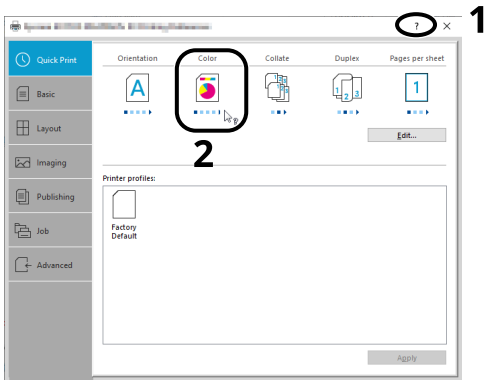

2 Click the item you want to know about.

NOTE

The Help appears, even when you click the item you want to know about and press the [F1] key on your keyboard.

Changing the Default Printer Driver Settings (Windows 10)

The default printer driver settings can be changed. By selecting frequently used settings, you can omit steps when printing. For the settings, refer to the following:

➡ **Printer Driver User Guide**

1. **Click [Start] button on the Windows and then select → [Windows System] → [Control Panel] and → [Devices and Printers].**
2. **Right-click the printer driver icon of the machine, and click the [Printer properties] menu of the printer driver.**
3. **Click the [Preference...] button on the [General] tab.**
4. **Select the default settings and click the [OK] button.**

Changing the Default Printer Driver Settings (Windows 11)

The default printer driver settings can be changed. By selecting frequently used settings, you can omit steps when printing. For the settings, refer to the following:

➡ **Printer Driver User Guide**

1. **Click the [Start] button → [Control Panel] → [Devices and Printers]**
2. **Right-click the printer driver icon of the machine, and click the [Printer properties] menu of the printer driver.**
3. **Click the [Preference...] button on the [General] tab.**
4. **Select the default settings and click the [OK] button.**

Printing from PC

This section provides the printing method using the KX DRIVER.

NOTE

- To print the document from applications, install the printer driver downloaded from Download Center (https://kyocera.info/) on your computer.
- In some environments, the current settings are displayed at the bottom of the printer driver.

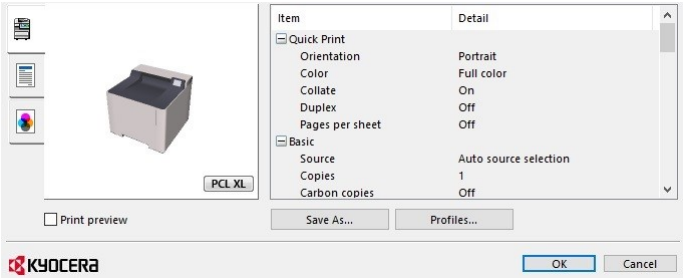

- When printing the cardstock or envelopes, load the cardstock or envelopes in the multipurpose tray before performing the following procedure.

➡ Loading Paper in the Multipurpose Tray (page 115)

Printing on Standard Size Paper

If you loaded a paper size that is included in the print sizes of the machine, select the paper size in the [Basic] tab of the print settings screen of the printer driver.

NOTE

Specify the paper size and media type to print from the operation panel.

➡ Paper Feeding (page 205)

1 Display the screen.

Click [File] and select [Print] in the application.

2 Configure the settings.

1 Select the machine from the "Printer" menu and click the [Properties] button.

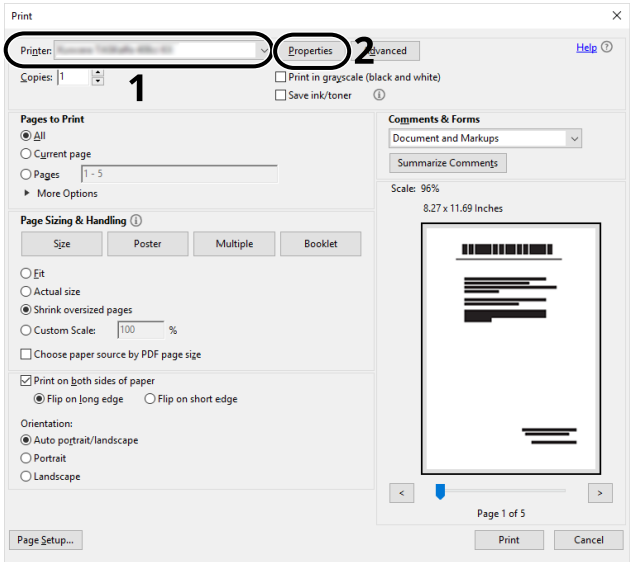

2 Select the [Basic] tab.

3 Click "Print size" menu and select the paper size to use for printing.

To load the paper of size that is not included in print sizes of the machine such as cardstock or envelopes, the paper size needs to be registered.

➡ Printing on Non-standard Size Paper (page 130)

To print on the special paper such as thick paper or transparency, click "Media type" menu and select the media type.

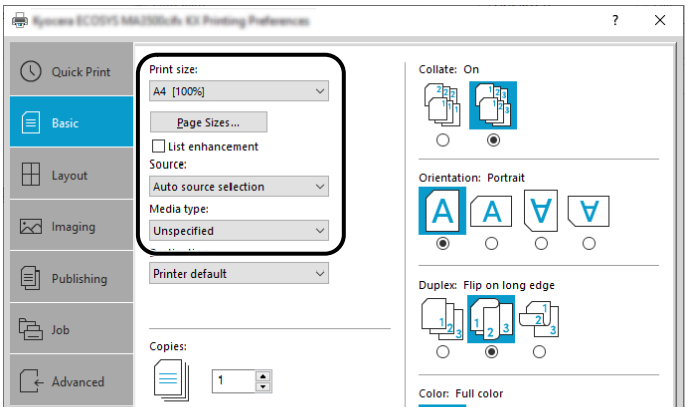

4 Click [OK] button to return to the Print dialog box.

3 Start printing.

Click the [OK] button.

Printing on Non-standard Size Paper

If you loaded a paper size that is not included in the print sizes of the machine, register the paper size in the [Basic] tab of the print settings screen of the printer driver.

The registered size can be selected from the "Print size" menu.

NOTE

Specify the paper size and media type to print from the operation panel.

➡ Paper Feeding (page 205)

1 Display the screen.

1. Select the Windows [Start] button → [Windows System Tool] → [Control Panel] → [Devices and Printers].

   NOTE

   For Windows 11, select the [Start] button → [All apps] → [Windows Tools] → [Control Panel] → [Devices and Printers].

2. Right-click the printer driver icon of the machine, and click the [Printer properties] menu of the printer driver.
3. Click the [Preferences] button on the [General] tab.

2 Register the group.

1 Click the [Basic] tab.

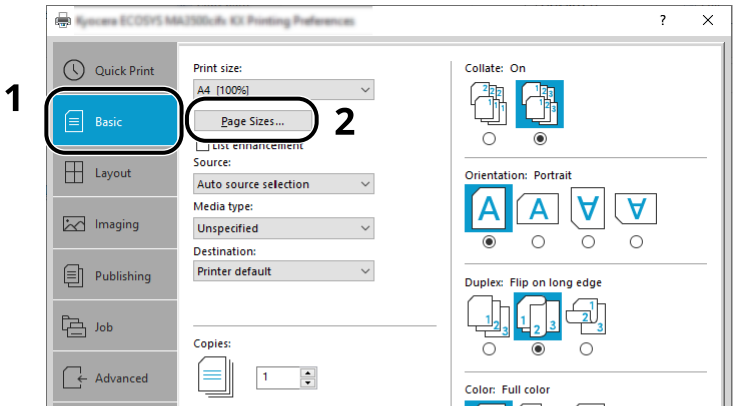

2 Click the [Page Sizes] button.

3 Click the [New] button.

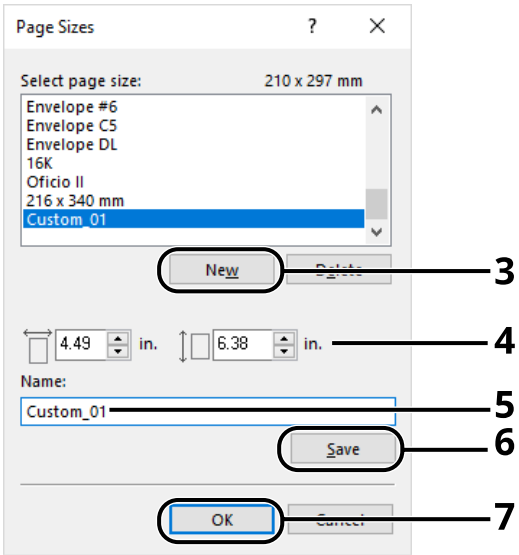

4 Enter the paper size.

5 Enter the name of the paper.

6 Click the [Save] button.

7 Click the [OK] button.

8 Click the [OK] button.

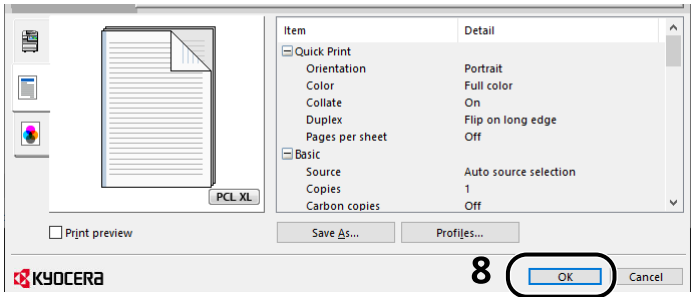

3 Display the print settings screen.

Click [File] and select [Print] in the application.

4 Select the paper size and type of non-standard size paper.

1 Select the machine from the "Printer" menu and click the [Properties] button.

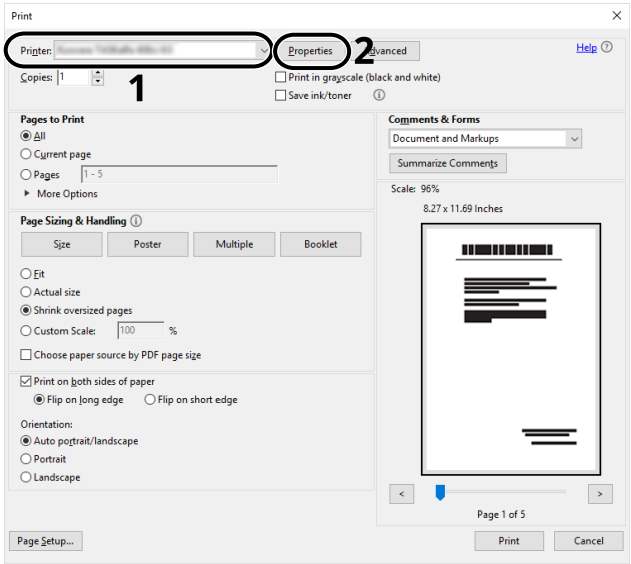

2 Select the [Basic] tab.

3 Click "Print size" menu and select the paper size registered in step 2.

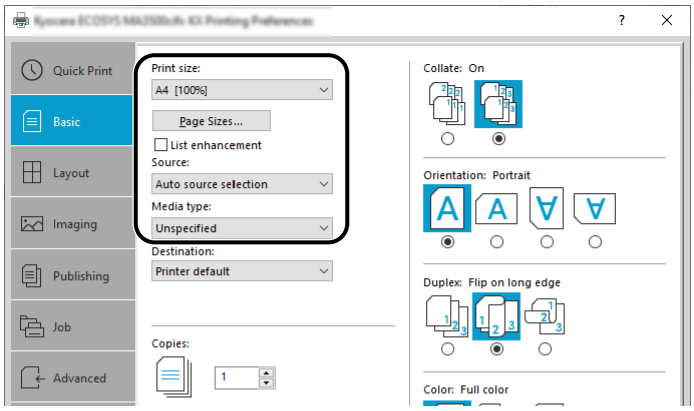

To print on the special paper such as thick paper or transparency, click [Media type] menu and select the media type.

NOTE

If you loaded a postcard or envelope, select [Cardstock] or [Envelope] in the "Media type" menu.

4 Select the paper source in the "Source" menu.

5 Click [OK] button to return to the Print dialog box.

5 Start printing.

Click the [OK] button.

Printing with Universal Print

Jobs can be printed via the cloud by using the cloud service "Universal Print" provided by Microsoft Corporation. Users authorized in the Azure Active Directory can print to Universal Print ready printers from anywhere.

NOTE

- A Microsoft 365 license and an Azure Active Directory account are necessary in order to use Universal Print. If you do not have one, please obtain these licenses and accounts.
- In order to use Universal Print, the following prerequisites need to be met:
  - A Universal Print-eligible license must be assigned to the user account used
  - Printer Administrator or Global Administrator privileges must be assigned to all administrators

Registering the Machine to Universal Print

1 Start up the browser.

Specify https://[Host name of this Machine] and start Command Center RX.

2 Display the screen.

[Function Settings] > [Printer] > "Universal Print Settings" > [Settings]

3 Configure the settings.

1 Enter "Printer Name" in "Basic".

NOTE

Set the proxy if required.

➡ **Command Center RX User Guide**

2 Click [Register] in "Universal Print".

A Microsoft URL and an access code are displayed.

3 Click the URL and enter the access code obtained in Step 2 > [Next]

4 Log in as Azure administrator.

NOTE

Credential is required only when you register for the first time. Click [Approve].

5 Close the Microsoft web page and return to the Command Center RX screen.

6 Click [OK].

Returns to the Universal Print Settings screen.

NOTE

Once registration is complete, [Register] in "Universal Print" will change to [Unregister], and the expiration date of certificate will be shown. Click [Refresh] if the display remains unchanged.

7 Click [Edit] in "Universal Print Preferences" and copy the unregister URL.

8 Open a new tab in the browser and paste the URL.

You will be redirected to the Universal Print web page.

9 Click [Printers].

Registered printers are displayed.

10 Check the box for this machine and click [Share].

The "Shares printers" screen is displayed.

11 Select the users you want to share this machine with from the "Select member(s)" menu and click the [Share Printer] button.

NOTE

Enable [Allow access to everyone in my organization] to share this machine with all users in your organization.

12 Close the Universal Print web page.

Registering a Shared Printer to a Computer

To use Universal Print, it is necessary to add a shared printer registered with Universal Print to the computer.

1 Login

1. Select the Windows Start button → [Settings] → [Accounts] → [Access work or school].
2. Confirm that the Azure administrator account name is displayed in [Work or school account], and click it.

NOTE

If the Azure administrator account name is not displayed, click [+] (Connect), and use the Azure administrator account name and password to log in.

2 Display the screen.

Select [Home] → [Devices] → [Printers & scanners].

3 Configure the function.

1. Click [Add a printer or scanner].
2. Select the shared printer and click [Add device].

   The shared printer is registered.

Print the Job

1 Display the screen.

Click [File] and select [Print] in the application.

2 Configure the settings.

1 Select a registered shared printer from the [Printer] menu and click the [Properties] button.

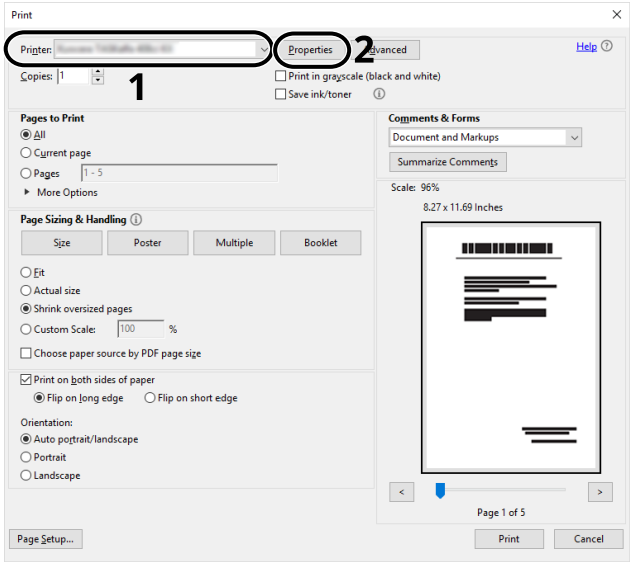

2 Set the paper size, printer function, etc., as desired.

3 Click [OK] button to return to the Print dialog box.

3 Start printing.

Click the [OK] button.

Canceling Printing from a Computer

To cancel a print job executed using the printer driver before the printer begins printing, do the following:

NOTE

When canceling printing from this machine, refer to the following:

➡ Canceling Jobs (page 168)

1 **Double-click the printer icon ( ) displayed on the taskbar at the bottom right of the Windows desktop to display a dialog box for the printer.**

2 **Click the file for which you wish to cancel printing and select [Cancel] from the "Document" menu.**

Printing from the Mobile Device

This machine supports the AirPrint and Mopria. According to the supported OS and application, you can print the job from any mobile device or computer without installing a printer driver.

Printing by AirPrint

AirPrint is a printing function that is included standard in iOS 4.2 and later products, and Mac OS X 10.7 and later products. To use the AirPrint, make sure that the AirPrint setting is enabled in the Command Center RX.

➡ **Command Center RX User Guide**

Works with Apple AirPrint

Printing by Mopria

Mopria is a standard on printing function included in Android 4.4 or later products. Mopria Print Service needs to be installed and enabled in advance. For details on how to use, refer to a Web site of Mopria Alliance.

Printing with Wi-Fi Direct

Wi-Fi Direct is a wireless LAN standard that Wi-Fi Alliance has been established. This is one of the functions of the wireless LAN, without a wireless LAN access point or wireless LAN router, between devices can communicate directly on a peer-to-peer basis.

The printing procedure by the Wi-Fi Direct is the same as that from the normal mobile devices.

When you use a printer name or Bonjour name on the port settings of the printer property, you can print the job by specifying the name at Wi-Fi Direct connection. When you use an IP address for the port, specify the IP address of this machine.

Printing Data Saved in the Printer

You can save the print job into the Job Box of this device and print it as necessary. If you configure settings in the [Job] tab of the printer driver and then print, the print job will be saved in the Job Box (memory) and printing can be executed at the machine.

To print the job in Job Box, specify the Job Box from a computer and sending the print job, then specify a file within a Box and printing it, using the operation panel.

You can print the documents from the following boxes.

- Private Print Box
  ➡ Printing Documents from Private Print Box (page 143)
- Stored Job Box
  ➡ Printing Document from Stored Job Box (page 145)
- Quick Copy Box
  ➡ Printing Document from Quick Copy Box (page 147)
- Proof and Hold Box
  ➡ Printing Document from Proof and Hold Box (page 149)
- PIN Print Box
  ➡ Printing Documents from PIN Print Box (page 151)
- Universal Print Box
  ➡ Printing the Documents Stored in the Universal Print Box (page 154)

Specifying the Job Box from a Computer and Storing the Job

1 Click [File] and select [Print] in the application.

The Print dialog box displays.

2 Click the [▼] button of the Name to select the machine from the list.

3 Click the [Properties] button.

The Properties dialog box displays.

4 Click the [Job] tab and select the [Job storage (e-MPS)] check box to set the function.

NOTE

For information on how to use the printer driver software, refer to the following:

➡ **Printer Driver User Guide**

Printing Documents from Private Print Box

In Private Printing, you can specify that a job is not to be printed until you operate the machine. When sending the job from the application software, specify a password in the printer driver. The job is released for printing by entering the password on the operation panel, ensuring confidentiality of the print job. The data will be deleted upon completion of the print job or after the power switch is turned off.

1 Display the screen.

1. [Home] key > [Job Box]
2. Select [Private Print/Stored Job].
3. Select the creator of the document.

2 Print the document.

1. Select the document to print > [Print]
2. Enter the password.
3. Specify the number of copies to print as desired.
4. Select [Start Print].

   Printing starts.

   Upon completion of printing, the Private Print job is automatically deleted.

Deleting the Documents Stored in the Private Print Box

1 Display the screen.

1 [Home] key > [Job Box]

2 Select [Private Print/Stored Job].

3 Select the creator of the document.

2 Delete the document.

1 Select the document to delete > [Delete]

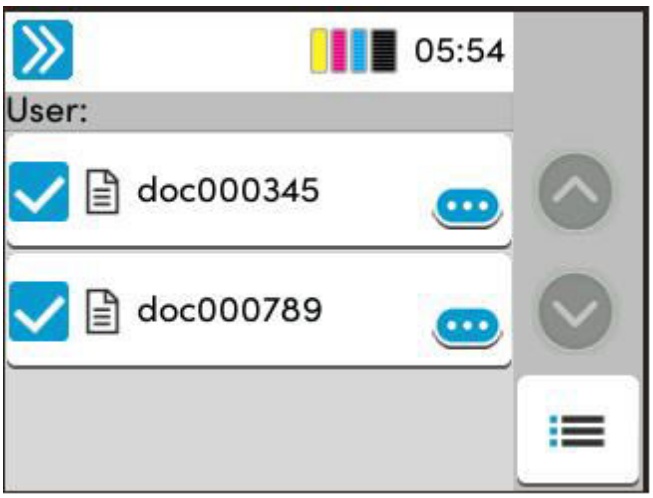

2 Enter the password.

The document is deleted.

Printing Document from Stored Job Box

In Stored Job, the print data sent from the application is saved to the machine. You can set up a password as necessary. If you set up a password, enter the password when printing. Print data will be stored in the Stored Job Box after printing. This will allow printing of the same print data repeatedly.

1 Display the screen.

1. [Home] key > [Job Box]
2. Select [Private Print/Stored Job].
3. Select the creator of the document.

2 Print the document.

1. Select the document to print > [Menu Button] > [Print]
2. Enter the password.
3. Specify the number of copies to print as desired.
4. Select [Start Print].

   Printing starts.

Simple Job Printing

When you save a print job performed via user login to the Stored Job Box, logging in with an IC card at the time of printing displays a list of your print jobs in the Stored Job Box. When you run the print job, printing starts immediately.

User login administration that uses the optional IC Card Authentication Kit is required. For details on user login administration for printing, refer to the following:

➡ Adding a User (Local User List) (page 283)

➡ Managing the Users that Print on This Machine from a PC (page 287)

For IC card settings, refer to the following:

➡ ID Card Settings (page 292)

For Simple Job Printing settings, refer to the following:

➡ Quick Job Printing (page 294)

Deleting the Documents Stored in the Stored Job Box

1 Display the screen.

1. [Home] key > [Job Box]
2. Select [Private Print/Stored Job].
3. Select the creator of the document.

2 Delete the document.

1. Select the document to delete > [Menu Button] > [Delete]
2. Enter the password.
   The document is deleted.

Printing Document from Quick Copy Box

Quick Copy feature facilitates additional prints of a document already printed. Activating Quick Copy and printing a document using the printer driver allow the print data to be stored in the Quick Copy Job Box. When additional copies are required, you can reprint the required number of copies from the operation panel. By default, up to 32 documents can be stored. When power is turned off, all stored jobs will be deleted.

NOTE

- When the number of jobs reaches the limit, the oldest job will be overwritten by the new one.
- To maintain free space on the hard disk, you can set the maximum number of stored jobs.

➡ Configure the Job Box (page 156)

1 Display the screen.

1. [Home] key > [Job Box]
2. Select [Quick Copy/Proof and Hold].
3. Select the creator of the document.

2 Print the document.

1. Select the document to print > [Print]
2. Specify the number of copies to print as desired.
3. Select [Start Print].
   Printing starts.

Deleting the Documents Stored in the Quick Copy Box

1 Display the screen.

1. [Home] key > [Job Box]
2. Select [Quick Copy/Proof and Hold].
3. Select the creator of the document.

2 Delete the document.

Select the document to delete > [Menu Button] > [Delete] > [Delete]

The document is deleted.

Printing Document from Proof and Hold Box

The Proof and Hold feature produces only a single proof print of multiple-print job and holds printing of the remaining copies. Printing a multiple-print job in Proof and Hold using the printer driver allows only a single copy to be printed while maintaining the document data in the Job Box. To continue to print the remaining copies, use the operation panel. You can change the number of copies to print.

1 Display the screen.

1. [Home] key > [Job Box]
2. Select [Quick Copy/Proof and Hold].
3. Select the creator of the document.

2 Print the document.

1. Select the document to print > [Print]
2. Specify the number of copies to print as desired.
3. Select [Start Print].

   Printing starts.

Deleting the Documents Stored in the Proof and Hold Box

1 Display the screen.

1. [Home] key > [Job Box]
2. Select [Quick Copy/Proof and Hold].
3. Select the creator of the document.

2 Delete the document.

Select the document to delete > [Delete] > [Delete]

The document is deleted.

Printing Documents from PIN Print Box

This PIN Print Box holds printing when printing is executed from applications that use the IPP protocol, such as AirPrint and Mopria. A pending print job can be output by entering the PIN code that was set at the time of printing.

1 Display the screen.

1. [Home] key > [Job Box]
2. Select [PIN Print].
3. Select the creator of the document.

2 Print the document.

1. Select the document to print > [Print]
2. Enter the PIN code.
3. Select [Print].

   Printing starts.

Deleting the Documents Stored in the PIN Print Box

1 Display the screen.

1. [Home] key > [Job Box]
2. Select [PIN Print].
3. Select the creator of the document.

2 Delete the document.

1. Select the document to print > [Delete]
2. Enter the PIN code.
3. Select [Delete].
   The document is deleted.

Printing Document from Universal Print Box

For added security, Universal Print can set a PIN code for the printing jobs. Jobs with a PIN code will be saved in the cloud without being printed. By entering the PIN code from the operation panel, jobs from this machine can be printed.

NOTE

- To use Universal Print, this machine must be registered as a shared printer.
  ➡ Registering the Machine to Universal Print (page 134)
- To use the Universal Print box, you need a Windows 11 and Microsoft 365 license and an Azure Active Directory account.

Storing a Job in the Universal Print Box

1 Display the screen.

Click [File] and select [Print] in the application.

2 Configure the settings.

1 Select a registered shared printer from the "Printer" menu and click the [Properties] button.

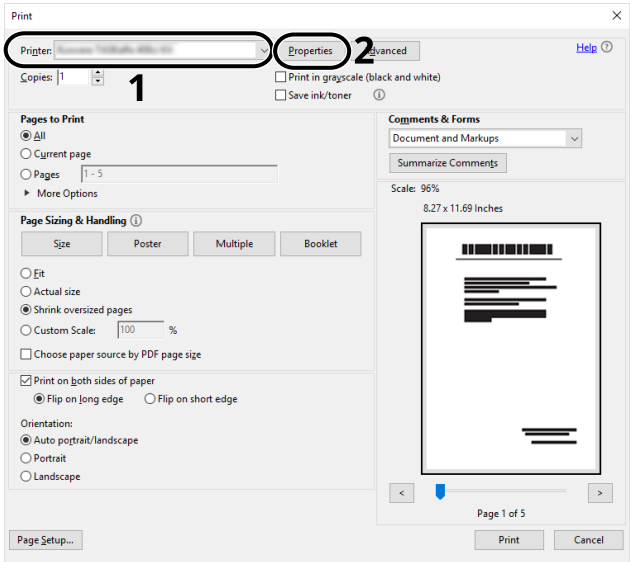

2 Select [Advanced settings].

3 Set [PIN-protected printing] to [On], and set a PIN code (4 digits) as the [PIN-protected printing PIN].

4 Click [OK] button > [OK] button to return to the Print dialog box.

3 Start printing.

Click the [OK] button.

Printing the Documents Stored in the Universal Print Box

1 Display the screen.

1. Select [Universal Print] in the Home screen.
2. Select the creator of the document.

2 Print the document.

1. Select the document to print > [Print]
2. Enter the PIN code.
3. Select [Start Print].
   Printing starts.
   Upon completion of printing, the Universal Print data is automatically deleted.

Deleting the Documents Stored in the Universal Print Box

1 Display the screen.

1. Select [Universal Print] in the Home screen.
2. Select the creator of the document.

2 Delete the document.

1. Select the document to delete > [Delete]
2. Enter the PIN code.
3. Select [Delete].
   The document is deleted.

Configure the Job Box

Configure settings for Job Box.

1 Display the screen.

[Home] key > [...] > [System Menu] > [Function Settings] > [Job Box].

2 Configure the settings.

The following settings can be configured.

[Quick Copy Job Retention]

To maintain free space on the box, you can set the maximum number of stored jobs.

Value: number between 0 and 300

NOTE

When 0 is set, Quick Copy cannot be used.

[Deletion of Job Retention]

This setting specifies that documents, such as Private Printing, Quick Copying, or Proof and Hold Printing, saved temporarily in the job box are automatically deleted after they have been saved for a set time.

Value: [Off], [1 hour], [4 hours], [1 day], [1 week]

NOTE

This function is valid for documents saved after the function is set. Regardless of this function setting, temporary documents are deleted when the power switch is turned off.

Monitoring the Printer Status (Status Monitor)

The Status Monitor monitors the printer status and provides an ongoing reporting function.

NOTE

When you activate Status Monitor, check the status below.

- KX DRIVER is installed.
- Either [Enhanced WSD] or [EnhancedWSD(TLS)] is enabled.

➡ Protocol Settings (page 246)

Accessing the Status Monitor

The Status Monitor also starts up when printing is started.

Exiting the Status Monitor

Use either of the methods listed below to exit the Status Monitor.

Exit manually

Click the settings icon and select Exit in the menu to exit the Status Monitor.

Exit automatically

The Status Monitor automatically shuts down if it is not being used.

Quick View State

The status of the printer is displayed using icons. Detailed information is displayed when the Expand button is clicked.

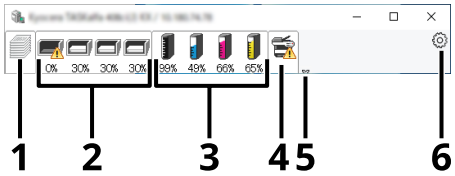

1 Printing progress tab

2 Paper tray status tab

3 Toner Status Tab

4 Alert tab

5 Expand button

6 Settings icon

Detailed information is displayed by clicking on each icon tab.

Printing Progress Tab

The status of the print jobs is displayed.

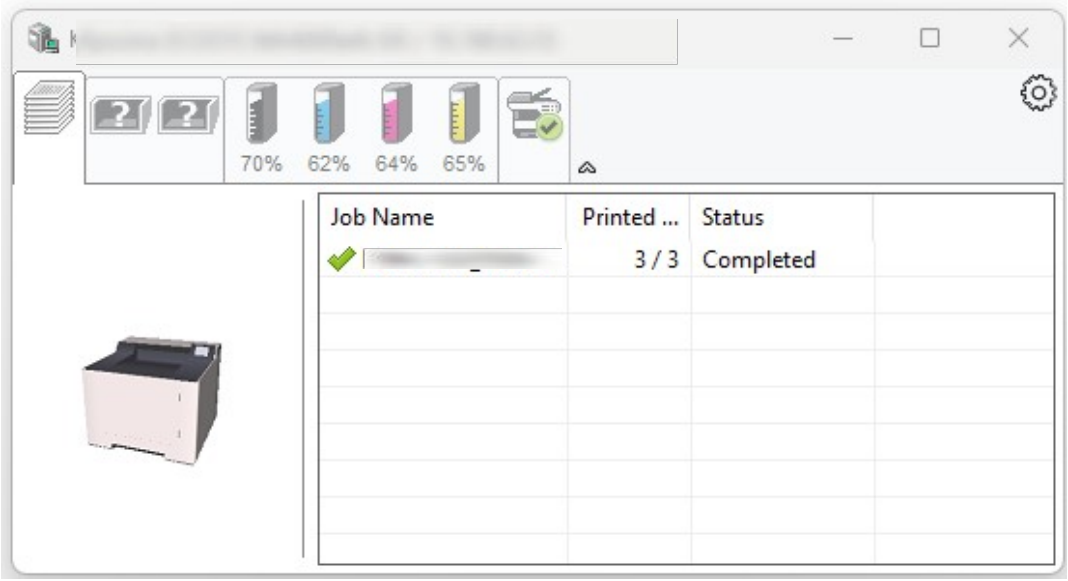

1 Status icon

2 Job list

Select a job on the job list and it can be canceled using the menu displayed with a right-click.

Paper Tray Status Tab

Information is displayed about the paper in the printer and about the amount of paper remaining.

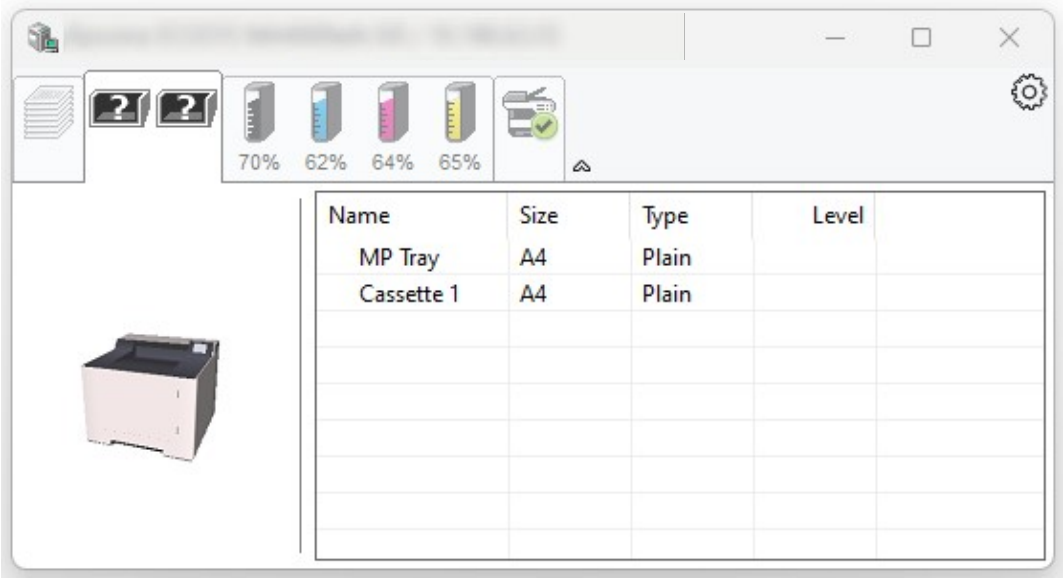

Toner Status Tab

The amount of toner remaining is displayed.

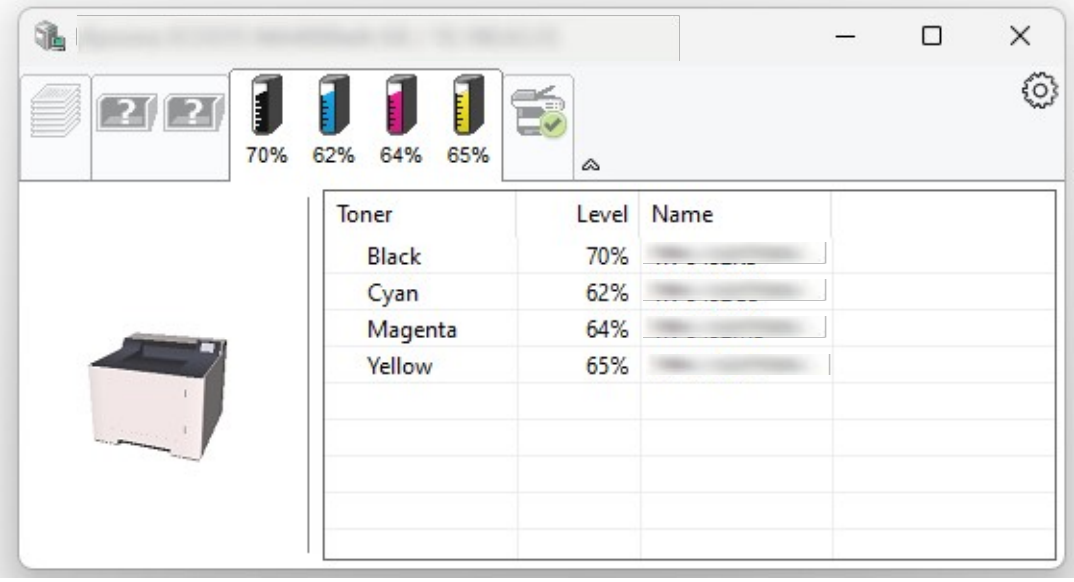

Alert Tab

If an error occurs, a notice is displayed using a 3D image and a message.

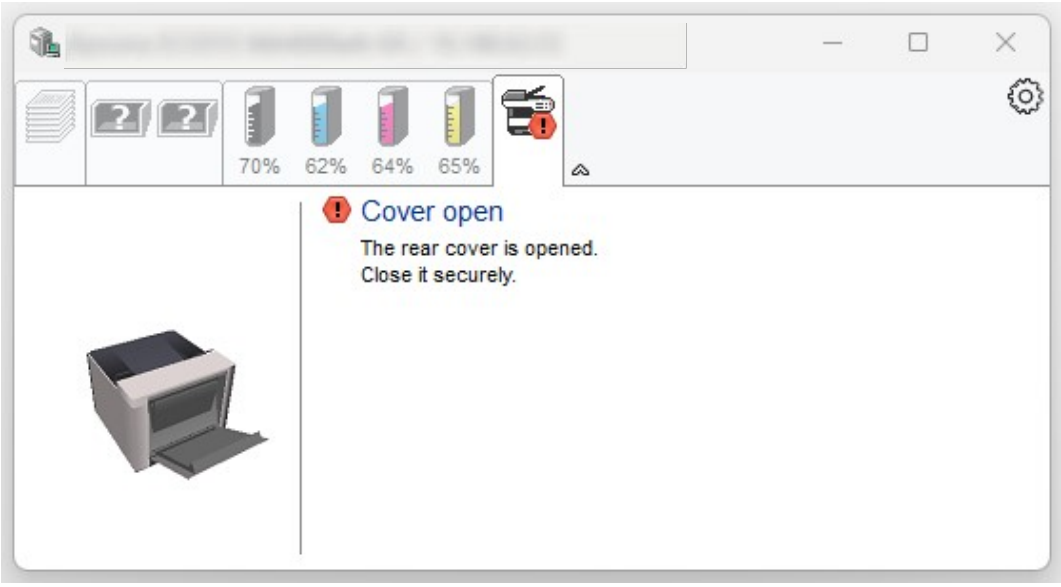

Status Monitor Context Menu

The following menu is displayed when the settings icon is clicked.

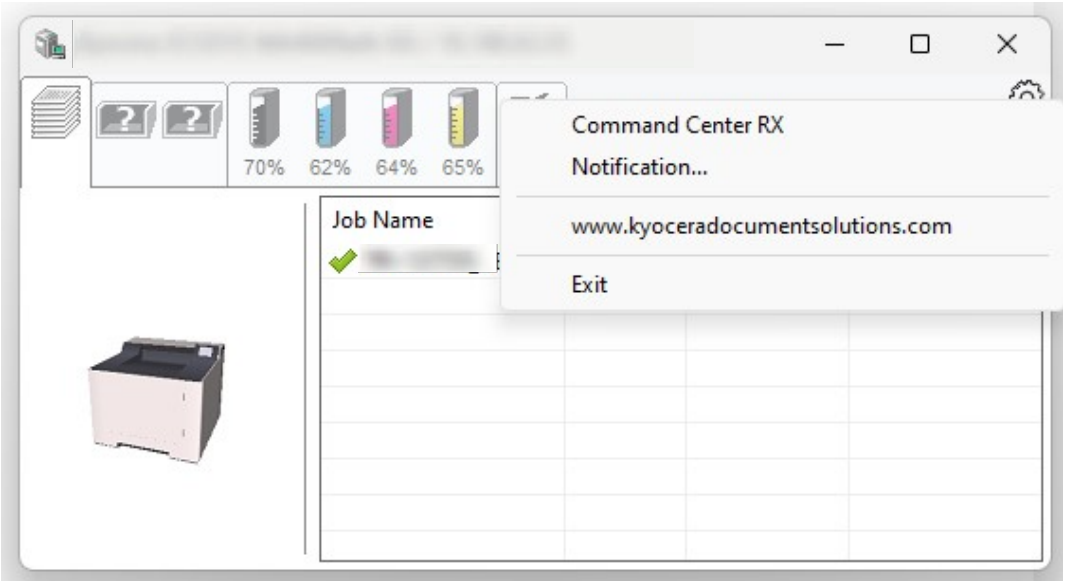

[Command Center RX]

If the printer is connected to a TCP/IP network and has its own IP address, use a web browser to access the Command Center RX to modify or confirm the network settings. This menu is not displayed when using USB connection.

➡ **Command Center RX User Guide**

[Notification...]

This sets the display of the Status Monitor.

➡ Status Monitor Notification Settings (page 165)

[www.kyoceradocumentsolutions.com]

Open our website.

[Exit]

Exits the Status Monitor.

Status Monitor Notification Settings

The Status Monitor settings and event list details are displayed.

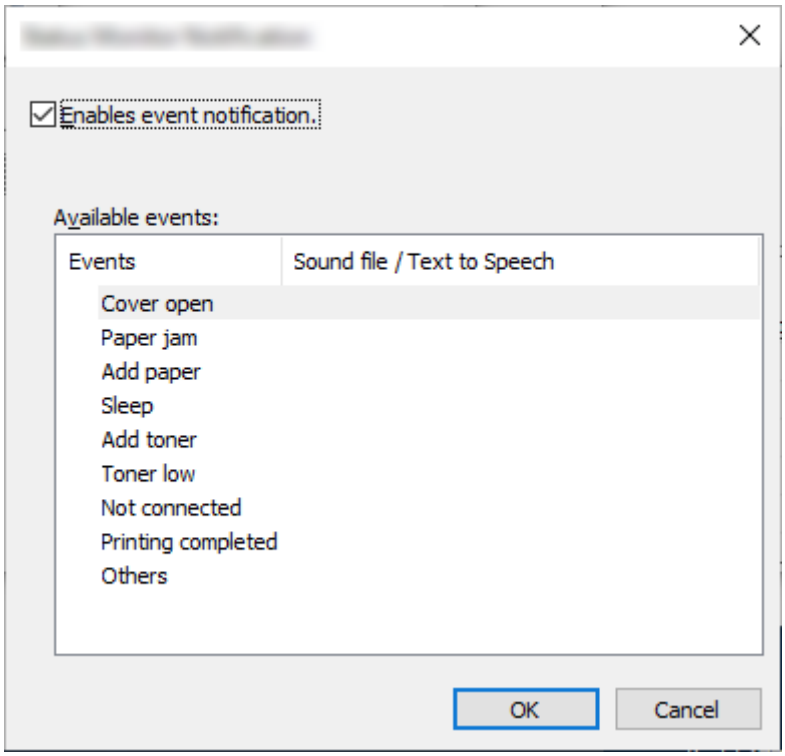

Select whether notification is performed when an error in the event list occurs.

1 Select "Enable event notification".

If this setting is set to Off, then the Status Monitor will not start up even when printing is executed.

2 Select an event to use with the text to speech function in Available events.

3 Click "Sound file / Text to Speech" column.

Click the browse (...) button to notify the event by sound file.

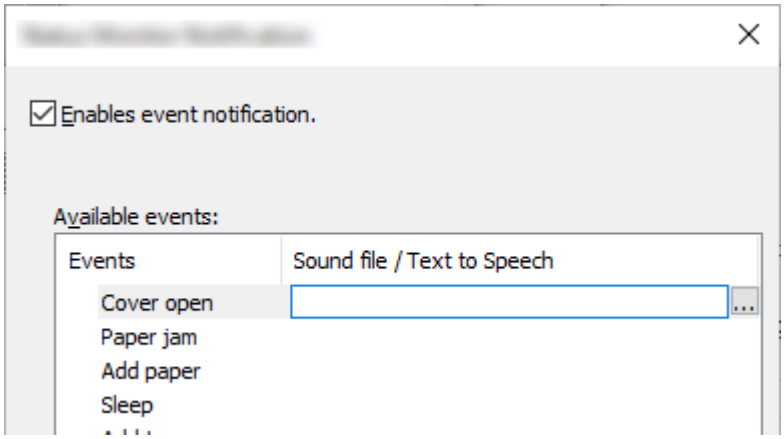

NOTE

The available file format is WAV.

When customizing the message texts to read on the screen aloud, enter the texts in the text box.

5 Operation on the Machine

Canceling Jobs

You can cancel jobs.

1 Confirm that [Processing.] is displayed on the message display.

[Job Cancel List] appears, and the current job names are displayed.

2 Cancel a job.

1. Select the job to cancel, and select the [Cancel].
2. Select [Yes].

   The job will be canceled.

NOTE

If the job is canceled and [Canceling...] is displayed, printing will be stopped after the page currently being printed is output.

Using Document Boxes

Document Box is a function for saving print data from a computer and sharing it with multiple users. The following types of document boxes are available:

- Job Box
- USB Drive Box

What is Job Box?

Job Box is a generic name for the "Private Print/Stored Job Box", "Quick Copy/Proof and Hold Box", and "PIN Print Box".

These Job Boxes cannot be created or deleted by a user.

NOTE

- You can set up the machine so that temporary documents in job boxes are automatically deleted.

  ➡ Configure the Job Box (page 156)

- For details on operating the "Private Print/Job Hold Box", "Quick Copy/Proof and Hold Box", or "PIN Print Box", refer to the following:

  ➡ Printing Data Saved in the Printer (page 142)

What is USB Drive Box?

A USB drive can be connected to the USB memory slot on the machine to print a saved file. You can print data directly from the USB drive without a PC.

Using Removable USB Drive

Plugging USB drive directly into the machine enables you to quickly and easily print the files stored in the USB drive without having to use a computer.

The following file types can be printed:

- PDF file (Version 1.7 or older)
- TIFF file (TIFF V6/TTN2 format)
- JPEG file
- XPS file
- OpenXPS file
- Encrypted PDF file

Printing Documents Stored in Removable USB Drive

NOTE

- PDF files you wish to print should have an extension (.pdf).
- Plug the USB drive directly into the USB Memory Slot.

1 Plug the USB Drive.

Plug the USB drive into the USB Memory Slot.

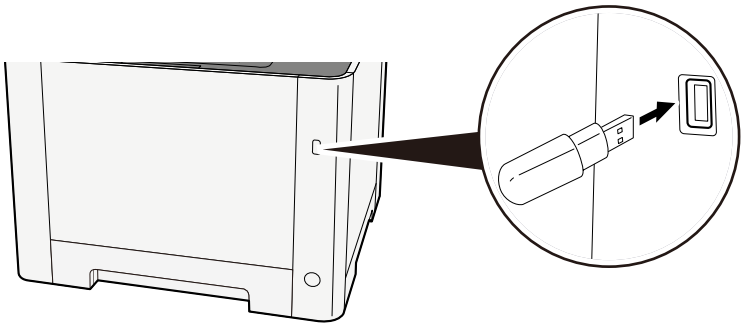

NOTE

If the USB drive screen is not displayed, display the USB drive screen.

[Home] key > [USB Drive]

2 Print the document.

1 Select the document to be printed and select [Menu].

NOTE

- 1,000 documents can be displayed.
- To return to a higher-level folder, select the [Back] key.
- Selecting [...] will display the details of the selected folder or document.

2 Select [Print].

3 Change the number of copies, duplex printing, etc. as desired.

For the functions that can be set, refer to the following:

➡ USB Drive (Printing Documents) (page 175)

4 Select [Start].

Printing of the selected document begins.

Removing USB Drive

IMPORTANT

Be sure to follow the proper procedure to avoid damaging the data or USB drive.

1 Display the screen.

[Home] key > [USB Drive]

2 Select Remove.

[Menu] > [Remove USB]

NOTE

USB Drive can also be removed via Device Information.

➡ Device Information (page 190)

Tapping the USB drive icon shown at the top of the touch panel and selecting [Remove USB] allows you to safely remove the USB drive.

➡ Home screen (page 50)

6 Using Various Functions

About Functions Available on the Machine

This machine provides the various functions available.

USB Drive (Printing Documents)

Function	Description
[Quiet Mode]	The operating sound of the machine can be suppressed. ➡ Quiet Mode (page 176)
[Duplex]	Print a document to 1-side or 2-sides. ➡ Duplex (page 177)
[EcoPrint]	EcoPrint saves toner when printing. ➡ EcoPrint (page 178)
[File Name Entry]	Adds a file name in the document. ➡ File Name Entry (page 179)
[JobFinish Notice]	Sends E-mail notice when a job is complete. ➡ Job Finish Notice (page 180)
[Encrypted PDF]	Enter the preassigned password to print the PDF data. ➡ Encrypted PDF (page 181)
[TIFF/JPEG Size]	Select the image size when printing JPEG or TIFF files. ➡ TIFF/JPEG size (page 182)
[XPS FitTo Page]	Reduces or enlarges the image size to fit to the selected paper size when printing XPS file. ➡ XPS print area setting (page 183)

Quiet Mode

The operating sound of the machine can be suppressed. Set Quiet Mode if you are concerned about the operating sound.

You can configure each function to use Quiet Mode.

Value: [Off], [On]

Duplex

Select binding orientation for duplex mode.

Value	Description
[1-sided], [2-sided (Bind Long Edge)], [2-sided (Bind Short Edge)]	[1-sided]: [2-sided (Bind Long Edge)] : Images on the second sides are rotated 180 degrees. [2-sided (Bind Short Edge)] : Images on the second sides are rotated 180 degrees. Print can be bound on the top edge, facing the same orientation when turning the pages.

Sample image

[Duplex] > [Bind Long Edge]

[Duplex] > [Bind Short Edge]

EcoPrint

EcoPrint saves toner when printing. Use this function for test prints or any other occasion when high quality print is not required.

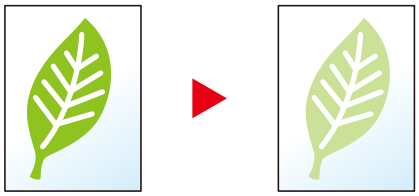

Value: [Off], [On]

File Name Entry

Adds a file name in the document.

Additional information such as job number and date and time can also be set. You can check a job history or job status using the file name, date and time, or job number specified here.

Enter the file name (up to 32 characters) and select the [OK] key.

To add a date and time, select [Date and Time] and then select the [OK] key. To add a job number, select [Job No.] and then select the [OK] key. To add both, select [Job No. + Date] or [Date + Job No.] and then select the [OK] key.

Job Finish Notice

Sends E-mail notice when a job is complete.

It can also be set up to send a notice when a job is interrupted.

Users can be notified of the completion of a job while working at a remote desk, saving the time spent waiting beside the machine to finish.

NOTE

- PC should be configured in advance so that E-mail can be used. For details, refer to the following:
  ➡ Command Center RX (page 99)
- E-mail can be sent to a single destination.

Item	Description
[Off]	Disables the function.
[Finished only]	Enter E-mail address directly. Enter the E-mail address (up to 256 characters) and select the [OK] Key.

Encrypted PDF

Enter the password you set to print the PDF data.

Enter the password and select the [OK] key.

NOTE

For details on entering the password, refer to the following:

➡ Character Entry Method (page 441)

TIFF/JPEG size

Select the image size when printing JPEG or TIFF files.

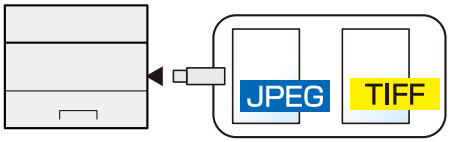

Item	Description
[Paper Size]	Fits the image size to the selected paper size.
[Image Resolution]	Prints at resolution of the actual image.
[Print Resolution]	Fits the image size to the print resolution.

XPS print area setting

Reduces or enlarges the image size to fit to the selected paper size when printing XPS file.

(Values [Off], [On])

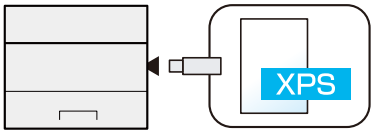

7 Status/Job Cancel

Checking Job Status

Check the status of jobs being processed or waiting to be printed.

Displaying Status Screen

1 Display the screen.

Select [...] > [Status/Job Cancel] key while the printer is waiting or printing.

Select [Printing jobs]

2 Select the job you want to check.

Select the job to check, and select [Menu] > [Cancel] or [...].

NOTE

- You can show the job statuses of all users, or only the statuses of your own jobs.
  ➡ Status (page 230)
- This setting can also be changed from Command Center RX. For details, refer to the following:
  ➡ **Command Center RX User Guide**

3 Check the information.

[Job Name]

When the job name cannot be displayed because the job name is too long, selecting [Detail] will display the entire job name. Selecting the [OK] key will return to the original screen.

[Status]

[Processing.]: The status before starting to print

[Waiting]: Print Waiting

[Pause]: Pausing print job or error

[Canceling]: Canceling the job

[-----]: The job is ending.

[Job Type]

[Printer]: Printer job

[Report]: Printing Report/List

[USB]: Printing data from USB Drive

[Box]: Printing from Document Box

[Accepted Time]

Accepted Time of job

[User Name]

User Name for the executed job

[Printed Pages (Total)]

Printed Pages

Printed Pages / Total Printed Pages

[Color/B & W]

Color mode

[Auto Color]

[Full Color]

[Black & White]

[Mixed]

Checking Job History

NOTE

- Job history is also available by Command Center RX or KYOCERA Net Viewer from the computer. For details, refer to the following:
  - ➡ **Command Center RX User Guide**
  - ➡ **KYOCERA Net Viewer User Guide**
- You can show the job log of all users, or only your own job log.
  - ➡ Status (page 230)
- This setting can also be changed from Command Center RX. For details, refer to the following:
  - ➡ **Command Center RX User Guide**

Displaying Job History Screen

1 Display the screen.

Select the [Home] key > [Status/Job Cancel] key while the printer is waiting or printing.

Select [Printing Job Log]

2 Select the job you want to check.

Select the job to check, and select [OK] key or [Detail]. An icon showing the result of the job is displayed to the right of each job.

OK : The job finished normally.

⚠ : Job error

⊘ : Job cancelled

Checking the Detailed Information of Histories

1 Display the screen.

➡ Displaying Job History Screen (page 187)

2 Check the information.

[Job Name]

When the job name cannot be displayed because the job name is too long, selecting [Detail] will display the entire job name. Selecting the [Close] key or [Back] key will return to the original screen.

[Result]

[Completed]: The Job is completed.

[Error]: Error has occurred.

[Canceled]: The job has been canceled.

[Job Type]

[Printer]: Printer job

[Report]: Printing Report/List

[USB]: Printing data from USB Drive

[Box]: Printing from Document Box

[Accepted Time]

Accepted Time of job

[User Name]

User Name for the executed job

[Printed Pages (Total)]

Printed Pages

Printed Pages / Total Printed Pages

[Color/B & W]

Color mode

[Auto Color]

[Full Color]

[Black & White]

[Mixed]

[End Time]

End time of job

Sending the Log History

You can send the log history by E-mail. You can either send it manually as needed or have it sent automatically whenever a set number of jobs is reached.

Device Information

Configure the devices/lines installed or connected to this machine or check their status.

1 Display the screen.

[Home] key > [...] > [Device Information]

The screen to check the status or configure the devices is displayed.

2 Check the information.

Select the item to check.

[Identification/Wired NW]

Displays the state of the wired network connection.

[Wi-Fi Direct/Wi-Fi]

Displays the state of the Wi-Fi.

Value:

Select [Device] to set the connectable devices.

Value: [Disconnected], [Reload]

Select [Push Button Setup] > [OK] key and execute the push button of the device you want to connect to start the connection with the machine.

Select [Wi-Fi] to display the state of the Wi-Fi.

[Supplies/Paper]

Displays remaining amount of Supplies and Paper.

[USB/Bluetooth]

Displays Connection status of USB memory and Bluetooth device.

[Option/Application]

Displays the installation status of Option and Application.

[Capability/Version]

Displays the machine's functions and software version.

[Security]

Displays the Security Information.

[Report]

Print various reports.

Value: [Status Page], [Service Status], [Network Status], [Print Accounting Report], [Font List], [Application Status], [Configuration List], [Data Sanitization Report]

[Remote Operation Status]

Displays the remote operation status.

Check Remaining Quantity of Toner, Paper

Check the remaining amount of toner and paper on the LCD panel.

1 Display the screen

1. Select [Home] key > [...].
2. Select [Device Information].
3. Select [Supplies/Paper].

2 Check the information.

The items you can check are described below.

Toner Information

The amount of toner remaining is shown in levels.

Paper

You can check the size and remaining amount of paper in each paper source. The amount of paper remaining is shown in levels.

8 System Menu

Operation Method

Configure settings related to overall machine operation. Change the default settings as appropriate for how you use the machine.

1 Display the screen.

1 Select [Home] key > [...] > [System Menu] > [Device Settings].

2 Select a function.

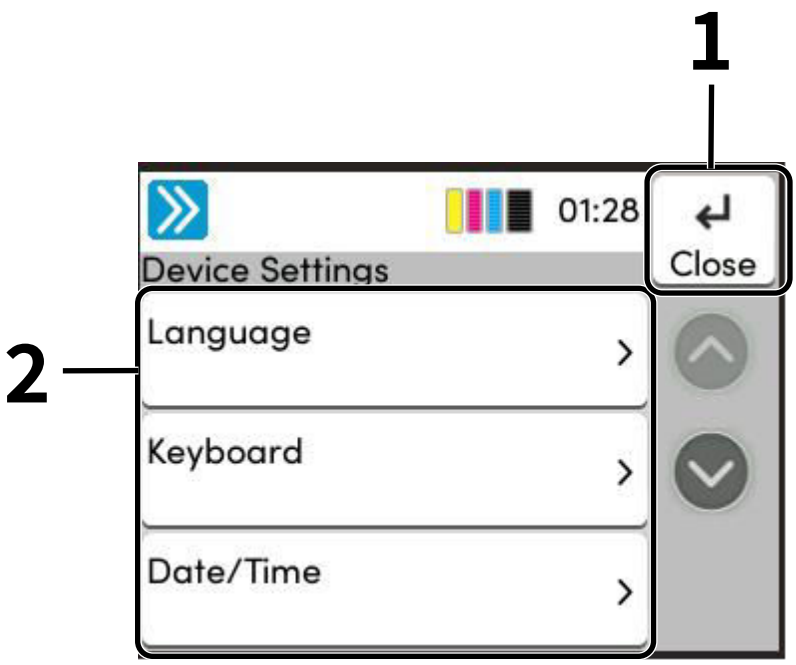

1 Returns to the previous screen.

2 Displays setting items.

Select the key of a function to display the setting screen.

NOTE

If the user authentication screen appears, log in with a user who has the privilege to configure this setting. If you do not know your login user name or password, please contact your administrator.

System Menu Settings

This section explains the functions that can be configured in System Menu. To configure the settings, select the item in System Menu and select the setting item.

For details on each function, see the table below.

[Quick Setup Wizard]

The Quick Setup Wizard configures Energy Saver, Network, E-mail and Security Setup.

➡ Quick Setup Wizard (page 76)

[Device Settings]

Configure overall machine operation.

➡ Device Settings (page 197)

Item	Description
[Language]	Set the language to use for the touch panel display. ➡ Language/Measurement (page 197)
[Keyboard]	Change the layout of the touch panel keyboard used to enter characters. ➡ Keyboard (page 198)
[Date/Time]	Configures settings related to the date and time. ➡ Date/Time (page 199)
[Energy saver/Timer]	Configure the Energy Saver settings. ➡ Energy Saver/Timer (page 200)
[Display Settings]	Configure the touch panel display settings. ➡ Display Settings (page 203)
[Sound]	Set options for buzzer sound during the machine operations. ➡ Sound (page 204)
[Paper Feeding]	Configure the paper and paper source settings. ➡ Paper Feeding (page 205)
[Error Handling]	Select whether to cancel or continue the job when error has occurred. ➡ Error Handling (page 213)
[Toner setting]	Configure the toner settings. ➡ Toner Settings (page 214)
[Managed by Admin]	Configure whether to manage the machine through administrator.

[Notification/Report]

Print reports to check the machine settings, status, and history. Settings for printing reports can also be configured.

➡ Notification/Report (page 215)

Item	Description
[Print Report/List]	Print various reports and lists. ➡ Print Report/List (page 215)

[Function Settings]

Configures the settings for functions.

➡ Function Settings (page 219)

Item	Description
[Function Defaults]	Defaults are the values automatically set after the warm-up is completed. Setting the frequently-used values as defaults makes subsequent jobs easier. ➡ Function Defaults (page 219)
[Email]	Configure settings for email transmission and receipt. ➡ Email (page 221)
[WSD]	Configure settings for WSD Print. ➡ WSD (page 222)
[Printer]	Printing from computers, settings are generally made on the application software screen. However, the following settings are available for configuring the defaults to customize the machine. ➡ Printer (page 223)
[Job Box]	Configure settings for Job Box. ➡ Job Box (page 227)
[Cloud Access Setting]	Configure settings for Cloud Access Setting. ➡ Cloud Access Setting (page 228)
[Home]	Configure settings for Home screen. ➡ Home screen (page 50)
[Status]	Configure settings for Status. ➡ Status (page 230)
[Remote Service]	Configures remote services settings. ➡ Remote Serv.Set. (page 231)

[Network Settings]

Configures network settings.

➡ Network Settings (page 232)

[Security Settings]

Configures security settings.

➡ Security Settings (page 259)

Item	Description
[Security Quick Setup]	The Security Level setting is primarily a menu option used by service personnel for maintenance work. There is no need for customers to use this menu.

[JobAccounting/Authentication]

Configures settings related to machine management.

For details on user login administration, refer to the following:

➡ Enable User Login Administration (page 280)

For details on job accounting, refer to the following:

➡ Enabling Job Accounting (page 298)

[Add/Delete Application]

Configure settings for Application.

➡ Add/Delete Application (page 264)

[Adjustment/Maintenance]

Adjust printing quality and conduct machine maintenance.

➡ Adjustment/Maintenance (page 265)

Device Settings

Configure overall machine operation.

Language/Measurement

[Home] key > [...] > [System Menu] > [Device Settings] > [Language/System of Units]

Item	Description
[Language]	Set the language to use for the touch panel display.

Keyboard

[Home] key > [...] > [System Menu] > [Device Settings] > [Keyboard]

Item	Description
[Keyboard Layout]	Change the layout of the touch panel keyboard used to enter characters. Value: [QWERTY], [QWERTZ], [AZERTY]
[Keyboard Language]	Follow the English display language.
[Optional Keyboard Type]	Select the optional keyboard type. Value: [US-English], [US-English with Euro], [French], [German], [UK-English]

Date/Time

[Home] key > [...] > [System Menu] > [Device Settings] > [Date/Time]

Item	Description
[Date and Time]	Set the date and time for the location where you use the machine. If you perform Send as Email, the date and time set here will be displayed on the header. Value: [Year] (2000 to 2035), [Month] (1 to 12), [Day] (1 to 31), [Hour] (0 to 23), [Min.] (0 to 59), [second] (0 to 59) ➡ Setting Date and Time (page 58) **NOTE** If you change the date/time while using the trial version of an application, you will no longer be able to use the application.
[Date Format]	Select the display format of year, month, and date. The year is displayed in Western notation. Value: [MM/DD/YYYY], [DD/MM/YYYY], [YYYY/MM/DD]
[Time Zone]	Set the time difference from GMT. Choose the nearest listed location from the list. ➡ Setting Date and Time (page 58)
[Summer Time]	Set the Summer Time. Value: [Off], [On]

Energy Saver/Timer

[Home] key > [...] > [System Menu] > [Device Settings] > [Energy Saver/Timer]

[Auto Panel Reset]

If no jobs are run for a certain period of time, automatically reset settings and return to the default setting.
Select to use Auto Panel Reset or not.

Value: Off, On

NOTE

For setting the time until the panel is automatically reset, refer to the following:

➡ Panel Reset Timer (page 200)

[Panel Reset Timer]

If you select On for Auto Panel Reset, you can set the amount of time to wait before Auto Panel Reset.

Value: 5 to 495 seconds (in 5 second increments)

NOTE

This function is displayed when [Auto Panel Reset] is set to On.

[Sleep Timer]

Set amount of time before entering Sleep.

Value: 1 to 60 minutes (1-minute increment)

➡ Sleep (page 72)

[Sleep Rules] (models for Europe)

Select whether to use the Sleep mode for the following functions individually:

This function will not be displayed when the optional Network Interface Kit or Fiery controller is installed.

- ID Card Reader
  (Displayed when the optional Card Authentication Kit is activated.)
- Application

Value: Off, On

NOTE

If the sleep condition is not turned off, the ID card cannot be recognized.

[Power Off Timer]

Select whether to turn off the power automatically after a period of inactivity.

Value: [20 minutes], [1 hour], [2 hours], [3 hours], [4 hours], [5 hours], [6 hours], [9 hours], [12 hours], [1 day], [2 days], [3 days], [4 days], [5 days], [6 days], [1 week]

[Power Off Rule]

Select whether or not the machine enters Power Off mode for the following function.

Select [On] to set the Power Off mode.

- Power Off Rule - Network
- Power Off Rule - USB Cable
- Power Off Rule - USB Host
- Power Off Rule - Application

  (Displayed when the optional Network Interface Kit is installed.)

Value: [Off], [On]

NOTE

Even when any of the functions is set to [On], if [Power Off Rule - NIC] is set to [Off] the machine does not enter Power Off Mode.

Even when [Power Off Rule - Network] or [Power Off Rule - USB Cable] is set to [Off], if the machine does not communicate with the other devices, the machine will enter Power Off Mode.

[Sleep Level](models except for Europe)

You can set the sleep level.

This function will not be displayed when the optional Network Interface Kit or Fiery controller is installed.

Item	Description
[Quick Recovery]	Set the Energy Saver mode to reduce power consumption even more than normal Sleep mode. Value: [Quick Recovery], [Energy Saver] **NOTE** Use the Quick Recovery mode only when the computer does not recognize USB-connected devices. Note that this will consume more power.
[Energy Saver]	

Item	Description
[Sleep Rules]	Select whether to use the Energy Saver mode for the following functions individually: • ID Card Reader Displayed when the optional Card Authentication Kit is activated. • Application Value: Off, On **NOTE** When the machine has entered sleep mode with Energy Saver setting, the ID card cannot be recognized.

[Energy Saver Recovery Lv.]

Select the method of recovery from energy saver.

Value:

[Full Recovery]

This mode enables the use of all functions immediately. However, this mode saves less energy.

[Normal Recovery]

In this mode, you can select the method from the following: enabling the use of all functions immediately or enabling the use of desired functions only. If you want to use all functions immediately, select the [Energy Saver] key to execute recovery.

[Ping Timeout]

Set the time until timeout occurs when [Ping] is executed in "Network Settings".

Value: 1 to 30 seconds (in 1 second increments)

Display Settings

[Home] key > [...] > [System Menu] > [Device Settings] > [Display Settings]

Item	Description
[Display Brightness]	Set the brightness of the touch panel. Value: 1 (Darker), 2, 3, 4, 5 (Lighter)
[Default Screen]	Select the screen appearing right after start-up (default screen). Value: [Home], [Status], [Job Box], [USB Drive]
[Wallpaper]	➡ Editing the Home Screen (page 51)

Sound

[Home] key > [...] > [System Menu] > [Device Settings] > [Sound]

[Buzzer]

Set options for buzzer sound during the machine operations.

Item	Description
[Key Confirmation]	Emit a sound when the operation panel and touch panel keys are selected. Value: [Off], [On], [On(User Op Only)]
[Job Finish]	Emit a sound when a print job is normally completed. Value: [Off], [On]
[Ready]	Emit a sound when the warm-up is completed. Value: Off, On
[Warning]	Emit a sound when errors occur. Value: Off, On
[Optional Keyboard]	Emit a sound to confirm key presses with a sound. Value: Off, On

Paper Feeding

[Home] key > [...] > [System Menu] > [Device Settings] > [Paper Feeding]

Configure the paper and paper source settings.

[Cassette 1 Settings] to [Cassette 2 Settings]

[Home] key [...] > [System Menu] > [Device Settings] > [Paper Feeding] > [Cassette 1 Settings] to [Cassette 2 Settings]

NOTE

[Cassette 2] is displayed when the following optional paper feeder is installed.

[Cassette 2]: Paper Feeder (250-sheet)

Item	Description
[Paper Size]	Select the paper size. **Value (Cassette 1)** [A4], [A5-R], [A5], [A6], [B5], [B6], [Folio], [216 x 340 mm], [Letter], [Legal], [Statement], [Executive], [OficioII], [16K], [ISO B5], [Custom] **Value (Cassette 2)** [A4], [A5-R], [A5], [A6], [B5], [B6], [Folio], [216 x 340 mm], [Letter], [Legal], [Statement-R], [Executive], [OficioII], [16K], [ISO B5],[Custom] For custom paper size, set the size for each cassette. ➡ [Custom Paper Settings] (page 208) Vertical 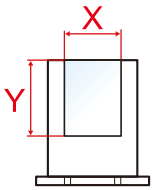 Horizontal 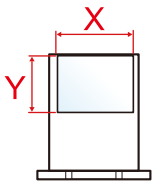

Item	Description
[Media Type]	**Value (Cassette 1)** [Plain], [Rough], [Recycled], [Preprinted], [Bond], [Color], [Prepunched], [Letterhead], [Thick], [High Quality], [Custom 1] to [Custom 8] **Value (Cassette 2)** [Plain], [Rough], [Recycled], [Preprinted], [Bond], [Color], [Prepunched], [Letterhead], [Thick], [High Quality], [Custom 1] to [Custom 8] • To change to a media type other than “Plain," refer to the following: ➡ Media Type Setting (page 210) • When a paper weight that cannot be loaded in the cassette is set for a media type, that media type does not appear. • To print on preprinted or prepunched paper or on letterhead, refer to the following: ➡ Paper Feed Settings (page 212)

[MP Tray Settings]

[Home] key > [...] > [System Menu] > [Device Settings] > [Paper Feeding] > [MP Tray Settings]

Item	Description
[Paper Size]	Select the paper size. Value: [A4], [A5], [A5-R], [A6], [B5], [B6], [Folio], [216 x 340 mm], [Letter], [Legal], [Statement], [Statement-R], [Executive], [OficioII], [16K], [ISO B5], [Envelope #10], [Envelope #9], [Envelope #6], [Envelope Monarch], [Envelope DL], [Envelope C5], [Hagaki], [Oufukuhagaki], [Youkei 4], [Youkei 2], [Younaga 3], [Nagagata 3], [Nagagata 4], [Custom] For custom paper size, set the size for each cassette. ➡ [Custom Paper Settings] (page 208) 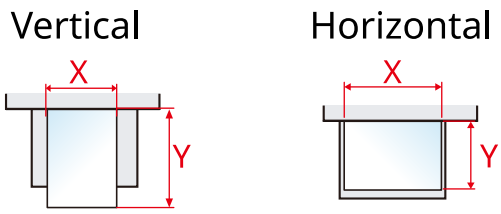
[Media Type]	Select the media type. Value: [Plain], [Transparency], [Rough], [Vellum], [Labels], [Recycled], [Preprinted], [Bond], [Cardstock], [Color], [Prepunched], [Letterhead], [Envelope], [Thick], [Coated], [High Quality], [Custom 1] to [Custom 8] To change to a media type other than “Plain,” refer to the following. ➡ Media Type Setting (page 210) To print on preprinted or prepunched paper or on letterhead, refer to the following: ➡ Paper Feed Settings (page 212)

[Custom Paper Settings]

[Home] key > [...] > [System Menu] > [Device Settings] > [Paper Feeding] > [Custom Paper Settings]

Set up frequently-used custom paper size. Register one custom size for each paper source. The registered size is displayed when the paper size is selected.

Item	Description
[Cassette 1 Size]	Register the custom size used for cassette 1. Value **Metric** X: 105 to 216 mm (in 1 mm increments) Y: 148 to 356 mm (in 1 mm increments) **Inch** X: 4.13 to 8.50" (in 0.01" increments) Y: 5.83 to 14.02" (in 0.01" increments) X=Width, Y=Length 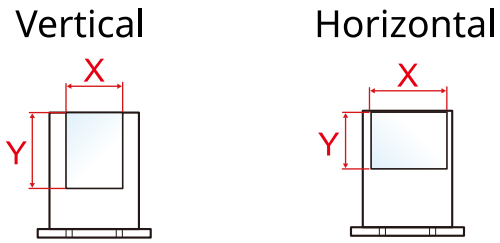
[Cassette 2 Size]	Register the custom size used for Cassette 2. Value **Metric** X: 105 to 216 mm (in 1 mm increments) Y: 148 to 356 mm (in 1 mm increments) **Inch** X: 4.13 to 8.50" (in 0.01" increments) Y: 5.83 to 14.02" (in 0.01" increments) X=Width, Y=Length

Item	Description
[Multipurpose Tray Size]	Register the custom size used for Multipurpose Tray. Value **Metric** X: 70 to 216 mm (in 1 mm increments) Y: 148 to 356 mm (in 1 mm increments) **Inch** X: 2.76 to 8.50" (in 0.01" increments) Y: 5.83 to 14.02" (in 0.01" increments) X=Width, Y=Length 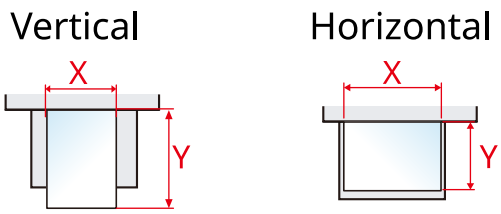

Media Type Setting

[Home] key > [...] > [System Menu] > [Device Settings] > [Paper Feeding] > [Media Type Setting]

Select weight for each media type.

The following media type and paper weight combinations are available.

Paper Weight	Weight (g/m^2) and Media Type
Normal 1	60 g/m^2 to 74 g/m^2
Normal 2	75 g/m^2 to 90 g/m^2
Normal 3	91 g/m^2 to 105 g/m^2
Heavy 1*1	106 g/m^2 to 135 g/m^2
Heavy 2*1	136 g/m^2 to 163 g/m^2
Heavy 3*1	164 g/m^2 to 220 g/m^2

*1 The processing speed will be slower than normal.

Each media type's default weight is indicated.

Media Type	Default
[Plain]	[Normal 2 (75 - 90g/m2)]
[Rough]	[Normal 3 (91 - 105g/m2)]
[Vellum]	[Heavy 1 (106 - 135g/m2)]
[Labels]	[Heavy 1 (106 - 135g/m2)]
[Recycled]	[Normal 2 (75 - 90g/m2)]
[Preprinted]	[Normal 2 (75 - 90g/m2)]
[Bond]	[Normal 3 (91 - 105g/m2)]
[Cardstock]	[Heavy 3 (164 - 220g/m2)]
[Color]	[Normal 2 (75 - 90g/m2)]
[Prepunched]	[Normal 2 (75 - 90g/m2)]
[Letterhead]	[Normal 2 (75 - 90g/m2)]
[Envelope]	[Heavy 2 (136 - 163g/m2)]
[Thick]	[Heavy 2 (136 - 163g/m2)]
[Coated]	[Heavy 1 (106 - 135g/m2)]
[High Quality]	[Normal 2 (75 - 90g/m2)]
[Custom 1] to [Custom 8]	[Normal 2 (75 - 90g/m2)]

For [Custom 1] to [Custom 8], settings for duplex printing and media type name can be changed.

Show Paper Setup Msg

[Home] key > [...] > [System Menu] > [Device Settings] > [Paper Feeding] > [Show Paper Setup Message]

Set whether to display the confirmation screen for the paper setting when a new paper is set for each cassette.

Item	Description
[Cassette 1] to [Cassette 2], [MP Tray]	Value: [Off], [On] **NOTE** [Cassette 2] is displayed when the following optional paper feeder is installed. [Cassette 2]: Paper Feeder (250-sheet)

Paper Feed Settings

[Home] key [...] > [System Menu] > [Device Settings] > [Paper Feeding] > [Paper Feed Settings]

[Default Paper Source]

Select the default paper source.

Value: [Cassette 1] to [Cassette 2], [MP Tray]

NOTE

[Cassette 2] is displayed when the following optional paper feeder is installed.

[Cassette 2]: Paper Feeder (250-sheet)

[Special Paper Action]

When printing on Prepunched, Preprint, and Letterhead, punch-holes might not be aligned or the print direction might be upside-down due to the way originals are set. In such a case, select [Adjust Print Direction] to adjust the print direction. When paper orientation is not important, select [Speed Priority].

If [Adjust Print Direction] is selected, load paper according to the steps below.

Example: Printing on Letterhead

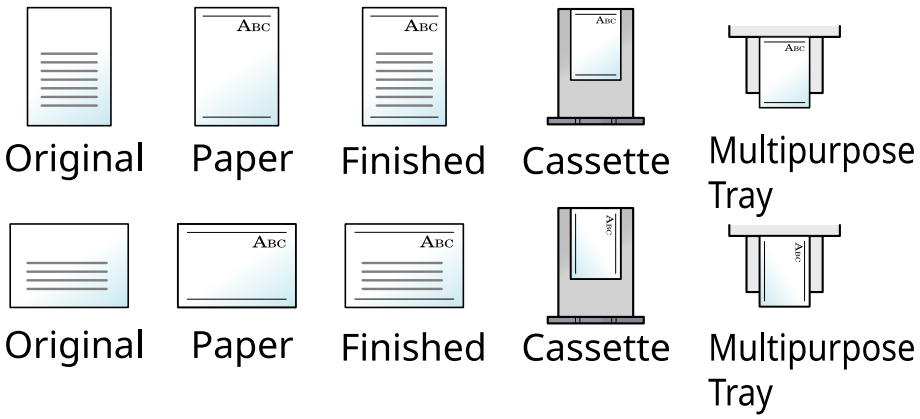

Value: [Adjust Print Direction], [Speed Priority]

Error Handling

[Home] key > [...] > [System Menu] > [Device Settings] > [Error Handling]

Select whether to cancel or continue the job when error has occurred.

Item	Description
[Duplexing Error]	Set what to do when duplex printing is not possible for the selected paper sizes and media types. Value [1 sided]: Printed in 1-sided. [Display Error]: Message to cancel printing is displayed.
[Paper Mismatch Error]	Set what to do when the selected paper size or type does not match paper size or type loaded in the specified paper source while printing from the computer by specifying the cassette or multipurpose tray. Value [Ignore]: The setting is ignored and the job is printed. [Display Error]: Message to cancel printing is displayed.
[MP Tray Empty]	Set whether to display the no paper message or not when printing with the paper source fixed to the multipurpose tray and no paper in the multipurpose tray. Value: Off, On
[Auto Error Clear]	If an error occurs during processing, processing stops to wait for the next step to be taken by the user. In the Auto Error Clear mode, automatically clear the error after a set amount of time elapses. Value: On, Off **NOTE** If you select On for Auto Error Clear, set the amount of time to wait before automatically clearing errors. The setting range is 5 to 495 seconds (in 5 second increments).
[Continue or Cancel Error Job]	Set which users can cancel or continue operations for jobs which were paused due to an error. Value: [All Users], [Job Owner Only] **NOTE** Administrator can cancel all jobs regardless of this setting.

Toner Settings

[Home] key > [...] > [System Menu] > [DeviceSetting] > [Toner Settings]

[Color Toner Empty Action]

Select whether printing is prohibited or the Print in Black and White setting is used for printing once the color toner runs out.

Value: [Stop Printing], [Print in Black & White]

NOTE

This setting is enabled when original consumables (specified toner) are used.

[Low Toner Alert]

Item	Description
[Notify via Operation Panel]	Set whether to display the alert on the operation panel when the toner is low. Value: [Off], [On]
[Low Toner Alert Level]	Set the amount of remaining toner to notify the administrator when to order a toner when the toner is running low. This notification is used for Event Reports, Status Monitors, and SNMPTraps (such as Printing Equipment Management Systems). Value: Off, On **NOTE** If On is selected, set the amount of remaining toner to alert. The setting range is 5 to 100% (in 1% increments).

[Managed by Admin.]

Configures settings for Managed by Admin.

[No(home)]: Small or home office (SOHO)

[Yes(Office)]: Mid-scale and above office

Notification/Report

Print various reports to check the machine settings, status, and history. Settings for printing reports can also be configured.

Print Report/List

[Home] key > [...] > [System Menu] > [Notification/Report] > [Print Report/List]

Item	Description
[Status Page]	Prints the status page. You can check information such as the current settings, available memory, and installed optional equipments. 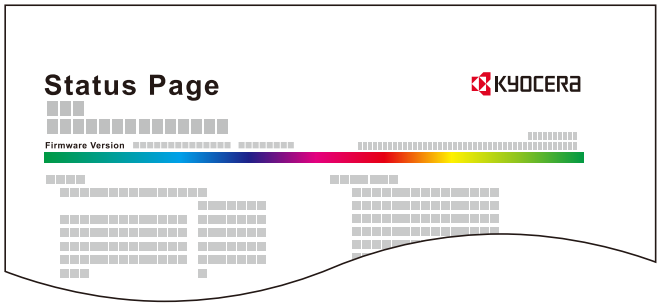
[Service Status]	Prints the service status. More detailed information is available than on the Status Page. Service personnel usually print the service status pages for maintenance purpose.
[Network Status]	Prints the Network status page. You can check information such as the firmware version, network address, and network protocol of the network interface. 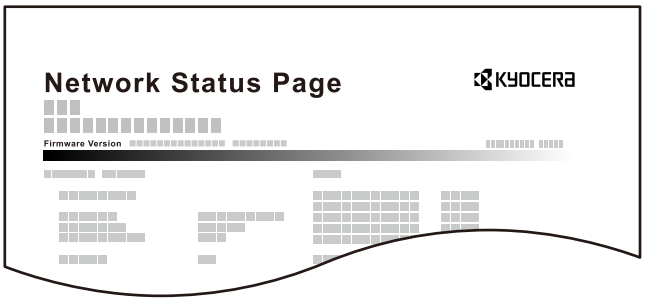
[Print Account Report]	If job accounting is enabled, the total pages counted of all relevant accounts can be printed as an accounting report. 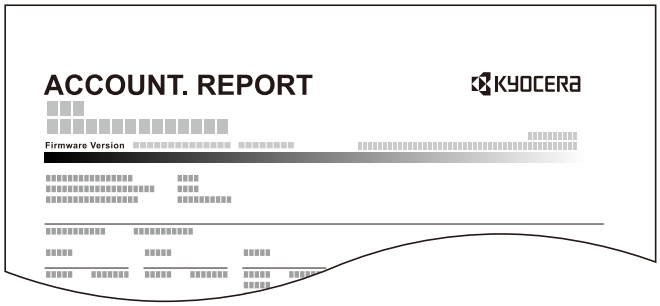 ➡ Print Accounting Report (page 308)

Item	Description
[Font List]	Prints the font list. You can check the fonts installed in this machine with a sample. 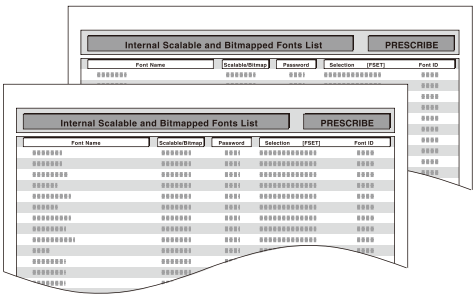
[Application Status]	Prints the Application status. You can check the information of the applications installed on this machine.
[Configuration List]	Print the system settings as the list.
[Data Sanitization Report]	Prints the data sanitization report.

Low Toner Alert

[Home] key > [...] > [System Menu] > [Notification/Report] > [Low Toner Alert]

[Low Toner Alert]

➡ Low Toner Alert (page 214)

Sending Log History

[Home] key > [...] > [System Menu] > [Notification/Report] > [Sending Log History]

NOTE

For details on the Log History, refer to the following:

➡ History Management (page 218)

[Sending Log History]

Item	Description
[Auto Sending]	This function automatically sends the log history to the specified destinations whenever a set number of jobs has been logged. Value: [Off], [On] **NOTE** If [On] is selected, specify the number of job histories. The setting range is 1 to 16.
[Destination]	Set the destination to which log histories are sent. Only E-mail address can be set.
[Subject]	Set the subject automatically entered when sending log histories by E-mail. Value: Up to 256 characters
[Personal Information]	Select whether to include personal information in the job log. Value: [Include], [Exclude]
[Send Log History]	You can also send the log history to the specified destinations manually.

History Management

It is possible to perform Log Management for the following logs on this machine.

Jobs Log

Log subject

Print job completion

Checking job status/Changing of jobs/Canceling of jobs

Log information

Event occurrence date and time

Event type

Information on users logged in (or users who attempted to log in)

Event results (Success/Failure)

Function Settings

Configures the settings for functions.

Function Defaults

[Home] key > [...] > [System Menu] > [Function Settings] > [Function Defaults]

[Common]

[File Name Entry]

Set an automatically entered name (default) for jobs. Additional information such as Date and Time and Job No. can also be set.

Value

File Name: Up to 32 characters can be entered.

Additional information: [None], [Job No.], [Date and Time], [[Job No.] & [Date and Time]], [[Date and Time] & [Job No.]]

[Print]

[Home] key > [...] > [System Menu] > [Function Settings] > [Function Defaults] > [Print]

Item	Description
[JPEG/TIFF Print]	Select the image size (resolution) when printing JPEG or TIFF file. Value: [Fit to Paper Size], [Image Resolution], [Fit to Print Resolution]
[XPS Fit to Page]	Set the default value for the XPS fit to page function. Value: Off, On
[Duplex]	Enables you to print on both sides of the paper. You can print on 1 side of each page for both sides of the original. [1 sided] >> [1 sided] [1 sided] >> [2 sided] Finishing: [Binding Left/Right], [Binding Top]

Email

[Home] key > [...] > [System Menu] > [Function Settings] > [Email]

[Email Settings]

Item	Description
[SMTP (Email TX)]	Select whether to send E-mail using SMTP. Value: Off, On

[POP3]

Item	Description
[POP3]	Select whether to receive E-mail using POP3. Value: Off, On
[Remote Printing]	➡ Remote Printing (page 226)

WSD

[Home] key > [...] > [System Menu] > [Function Settings] > [WSD]

[WSD Print]

Item	Description
[Protocol Settings]	Set whether to use our proprietary web services. The setting will be changed after restarting the device or network. Value: Off, On

Printer

[Home] key > [...] > [System Menu] > [Function Settings] > [Printer]

Item	Description
[Emulation]	Select the emulation for operating this machine by commands oriented to other types of printers. Value: [PCL6], [KPDL], [KPDL (Auto)] **NOTE** • When you have selected [KPDL (Auto)], set "Alt Emulation", too. • When you have selected [KPDL] or [KPDL (Auto)], set "KPDL Error Report", too. **KPDL Error Report** When an error has occurred during printing in KPDL emulation mode, set whether or not the error report is output. Value: Off, On
[Color Setting]	You can choose whether reports are printed in color or black and white. Value: [Color], [Black & White]
[Print GR with K Toner]	Configure settings for Print GR with K toner. [Photo] Value: [Off], [On] [Graphics] Value:[Off], [On] [Text] Value:[Off], [On]
[Gloss Mode]	Gloss Mode increases the effect of glossiness in printing. However, printing takes longer time. Value: Off, On **IMPORTANT** This function is not available when [Labels] or [Transparency] is selected as the paper type setting. ➡ Paper Feeding (page 205) Depending on the paper used, printing in gloss mode may cause curl in paper. To reduce curl, try using thicker paper.
[EcoPrint]	EcoPrint conserves toner when printing. This is recommended for test copies where faded printing is not a problem. Value: Off, On

Item	Description
[Override A4/Letter]	Select whether to treat A4 size and Letter, which are similar in size, as the same size when printing. Value **Off** A4 and Letter are not regarded as the same in size. **On** A4 and Letter are regarded as the same in size. The machine will use whichever size is in the paper source.
[Duplex]	Select binding orientation for duplex mode. Value: [1-sided], [2-sided (Bind Long Edge)], [2-sided (Bind Short Edge)]
[Copies]	Set the default number of copies, from 1 to 999. Value: 1 to 999 copies
[Reduced Print]	Configure settings for reducing the print data and printing (reduced printing). Set the paper size before reduction and reduction ratio. **NOTE** In reduced printing, unlike the print result of 1x size, the line width of characters may not be constant, or lines may be seen in figures, images, patterns, etc. Also, thin lines may not be printed. Also, if you print the barcode in reduced size, it may not be readable.
[Orientation]	Set the default orientation, [Portrait] or [Landscape]. Value: [Portrait], [Landscape]
[Form Feed Timeout]	Receiving print data from the computer, the machine may sometimes wait if there is no information signaling that the last page does not have any more data to be printed. When the preset timeout passes, the machine automatically prints paper. The options are between 5 and 495 seconds. Value: 5 to 495 seconds (in 5 second increments)
[LF Action]	Set the line feed action when the machine receives the line feed code (character code 0AH). Value: [LF Only], [LF and CR], [Ignore LF]
[CR Action]	Set the character return action when the machine receives the character return code (character code 0DH). Value: [CR Only], [LF and CR], [Ignore CR]
[Job Name]	Set whether the job name set in the printer driver is displayed. Value: Off, On **NOTE** If you select On, select from [Job Name], [Job No. & Job Name] or [Job Name & Job No.] to use as the job name.

Item	Description
[User Name]	Set whether the user name set in the printer driver is displayed. Value: Off, On
[Paper Feed Mode]	While printing from the computer, select how to feed paper when the paper source and type are specified. Value **[Auto]** Search the paper source that matches the selected paper size and type. **[Fixed]** Print on paper loaded in the specified paper source.
[MP Tray Priority]	If paper is set in the MP Tray then it is possible for priority to be given to that MP tray in the paper feed. Value **[Off]** The printer driver settings are followed. **[Auto Feed]** If Auto is selected in the printer driver and there is paper in the MP tray then the paper feed will be from the MP tray. **[Always]** If there is paper in the MP tray then the paper feed will be from the MP tray regardless of what is set in the printer driver.
[Auto Cassette Change]	Select the following actions when the paper runs out in the paper source while printing. Value: Off, On **NOTE** • When selecting Off, the machine displays "Add the following paper in cassette #." (# is a cassette number) or "Add paper in Multipurpose Tray.", and stops printing. • When you load the paper in the cassette displayed in the message, printing resumes. • If you wish to print from another cassette, select the desired paper source with [Paper Selection]. • When selecting On, the machine continues printing automatically when the other cassette contains the same paper as the currently-used cassette.
[Wide A4]	Turn this to On to increase the maximum number of characters that can be printed in a line for an A4 page (78 characters at 10 pitch) and Letter size page (80 characters at 10 pitch). This setting is only effective in PCL6 emulation. Value: Off, On

Item	Description
[Resolution]	Set the resolution used for printing. Value: [600 dpi], [1200 dpi] **NOTE** Settings that are received from the printer driver have priority over the operation panel settings.
[KIR]	Select the default KIR (smoothing) setting. Value: Off, On
[Printing Job Terminator]	You can select the condition which is regarded as a job termination if the print job could not be processed until the end due to your environment and the other reason. Value **[EOJ (End of Job)]** The command recognized as a termination of the job data is regarded as one job until it is detected. **[End of Network Session]** The data included in a network session at network connection is regarded as one job. **[UEL (Universal Exit Lang.)]** The UEL included in the termination of the job data is regarded as one job until it is detected.
[Remote Printing]	Select whether to prohibit printing that is performed without operating the machine. When [Prohibit] is selected, a document that has been stored in the document box from the printer driver can be printed from the machine. This prevents another person from seeing that document. Value: [Prohibit], [Permit] **NOTE** If [Prohibit] is selected, printing and storing using Quick Copy and Proof and Hold functions are disabled.
[Direct Printing from Web]	Set whether to allow Direct Printing from Command Center RX. Value: [Not Allowed], [Allowed] ➡ **Command Center RX User Guide**

Job Box

[Home] key > [...] > [System Menu] > [Function Settings] > [Job Box]

Item	Description
[Quick Copy Job Retention]	To maintain free space in the box, you can set the maximum number of stored jobs. Value: number between 0 and 300 **NOTE** When 0 is set, Quick Copy cannot be used.
[Deletion of Job Retention]	This setting specifies that documents, such as Private Printing, Quick Copying, or Proof and Hold Printing, saved temporarily in the job box are automatically deleted after they have been saved for a set time. Value: [Off], [1 hour], [4 hours], [1 day], [1 week] **NOTE** This function is valid for documents saved after the function is set. Regardless of this function setting, temporary documents are deleted when the power switch is turned off.

Cloud Access Setting

[Home] key > [...] > [System Menu] > [Function Settings] > [Connect to Cloud Access]

Item	Description
[Connect to Cloud Access]	Select whether to use Connect to Cloud Access. Value: [Off], [On]
[Edit Restriction]	Select Edit Restriction. This function is displayed when [Connect to Cloud Access] is set to On. Value: [Off], [Administrator Only]

Home

[Home] key > [...] > [System Menu] > [Function Settings] > [Home]

Configure settings for Home screen.

➡ Editing the Home Screen (page 51)

Status

[Home] key > [...] > [System Menu] > [Function Settings] > [Status]

[Job Status/Logs Settings]

Set the display of Job Status/Jobs History.

Item	Description
[Display Jobs Detail Status]	Value: [Show All], [My Jobs Only], [Hide All]
[Display Jobs Log]	Value: [Show All], [My Jobs Only], [Hide All]

Remote Serv.Set.

[Home] key > [...] > [System Menu] > [Function Settings] > [Remote Service] > [Remote Service Settings]

When the trouble occurs on this product, it is possible to explain the operational procedure and the troubleshooting method through the internet from our sales office by accessing the operation panel screen of this product while operating the screen.

Value: Off, On

NOTE

When using the remote service settings, it is necessary to make a contract with our company. Please contact our sales office or our authorized dealer (purchase source) for the details.

Network Settings

Configures network settings.

Host Name

[Home] key > [...] > [System Menu] > [Network Settings] > [Host Name]

Item	Description
[Host Name]	Check the host name of the machine. Host name can be changed from Command Center RX. ➡ Changing Device Information (page 102)

[Proxy]

[Home] key > [...] > [System Menu] > [Network Settings] > [Proxy]

Item	Description
[Proxy]	Select whether to use Proxy. Value: [Off], [Use Different Proxy Server], [Use the Same Proxy Server]

Wi-Fi Direct Setting

[Home] key > [...] > [System Menu] > [Network Settings] > [Wi-Fi Direct Settings]

Set Wi-Fi Direct Settings.

NOTE

This function is displayed when Wi-Fi module is installed.

Item	Description
[Wi-Fi Direct]	Select whether to use Wi-Fi Direct. Value: [Off], [On]
[Device Name]	Specify the device name. **NOTE** • Up to 32 characters can be entered. • This function is displayed when [Wi-Fi Direct] is set to [Enable].
[IP Address]	Check the IP address of the machine. ➡ TCP/IP Settings (page 241) **NOTE** This function is displayed when [Wi-Fi Direct] is set to [Enable].
[Auto Disconnect]	Automatically disconnect devices connected through Wi-Fi Direct. Value: [Off], [On] **NOTE** • If you select [On], set the waiting time for automatic disconnection. • This function is displayed when [Wi-Fi Direct] is set to [Enable].
[Persistent Group]	Set whether Wi-Fi Direct connection as Persistent Group (information for the connection is kept even if the power is turned off). Value: [Off], [On] **NOTE** This function is displayed when [Wi-Fi Direct] is set to [Enable].
[Frequency Band]	Set the frequency band to be used. Value: [2.4 GHz], [5 GHz]

Item	Description
[Password]	Select whether the Wi-Fi Direct password is automatically generated or created manually. When [Manual Creation] is selected, the Persistent Group setting changes to [On]. Value: [Off], [On] **NOTE** If [Manual Creation] is selected, set a password (8 or more characters).

Wi-Fi Settings

[Home] key > [...] > [System Menu] > [Network Settings] > [Wi-Fi Settings]

Set Wi-Fi Settings.

NOTE

This function is displayed when Wi-Fi module is installed.

[Wi-Fi]

Item	Description
[Wi-Fi]	Select whether to use Wi-Fi. Value: [Off], [On]

Setup

When [Wi-Fi] is On, the following items are displayed.

[Available Network]

Displays access points to which the machine can connect. Select [Menu] > [Reload] to refresh the access point list.

Item	Description
[Reload]	Displays access points to which the machine can connect. Select [Menu]>[Reload] to refresh the access point list.
[Index]	Select the key index of the access point. Value: 0 to 3

[Push Button Method]

If the access point supports the push button method, wireless settings can be configured using the push button. This setting executes push button, and the connection is started by pressing the push button on the access point.

NOTE

The push button method supports only the WPS.

[PIN Code Method (Device)]

Starts connection using the machine's PIN code. Enter the PIN code into the access point. The PIN code of the machine is automatically generated.

[Custom Setup]

The detailed settings for wireless LAN can be changed.

Item	Description
[Network Name (SSID)]	Set the SSID (Service Set Identifier) of the wireless LAN to which the machine connects. **NOTE** Up to 32 characters can be entered.
[Network Authentication]	Select network authentication type. Value: [Open], [WPA2/WPA-PSK], [WPA2-PSK], [WPA2/WPA-EAP], [WPA2-EAP], [WPA3-SAE/WPA2-PSK], [WPA3-SAE], [WPA3/WPA2-EAP], [WPA3-EAP]
[Encryption]	Select encryption method. The setting values vary depending on the Network Authentication setting. Value: [AES], [Auto]
[Preshared Key]	Set the Preshared key. **NOTE** Up to 64 characters can be entered.

TCP/IP Settings

[TCP/IP]

Select whether to use TCP/IP Protocol.

Value: [Off], [On]

[IPv4 Settings]

Set up TCP/IP (IPv4) to connect to the network.

This setting is available when [TCP/IP] is [On].

Item	Description
[DHCP]	Select whether to use the DHCP (IPv4) server. Value: [Off], [On]
[Auto-IP]	Select whether to use Auto-IP. Value: [Off], [On]
[IP Address]	Set the IP address. Value: ###.###.###.### **NOTE** When DHCP is set to [On], the value cannot be entered.
[Subnet Mask]	Set the IP subnet mask. Value: ###.###.###.### **NOTE** When DHCP is set to [On], the value cannot be entered.
[Default Gateway]	Set the IP gateway address. Value: ###.###.###.### **NOTE** When DHCP is set to [On], the value cannot be entered.
[DNS Server Address]	Set the IP address of DNS (Domain Name System) server. Value: [Auto (DHCP)], [Manual] **NOTE** When [Manual] is selected, enter the DNS server IP address in the Primary and Secondary fields provided.

Item	Description
[DNS over TLS]	Set whether to connect to a DNS server during communication protected by TLS. Value: [Off], [On], [Auto]

IMPORTANT

- When setting the Auto-IP, enter "0.0.0.0" in IP Address.
- After changing the setting, restart the network or turn the machine OFF and then ON.

[IPv6 Settings]

Set up TCP/IP (IPv6) to connect to the network. This setting is available when [TCP/IP] is [On].

Item	Description
[IPv6]	Select whether to use IPv6. Value: [Off], [On] **NOTE** Selecting [On] displays IP address in [Link Local] after restarting the network.
[IP addr.(LinkLocal)]	Manually specify the IP address, prefix length, and gateway address of TCP/IP (IPv6). Value **[IP Address]** 128-bits address is expressed in eight groups consisting of four-digit hexadecimal digits. The groups are separated by colon (:). **[Prefix Length]** 0 to 128 **[Default Gateway]** 128-bits address is expressed in eight groups consisting of four-digit hexadecimal digits. The groups are separated by colon (:). **NOTE** • This function is displayed when [IPv6] is set to [On].

Item	Description
[RA(Stateless)]	Select whether to use RA (Stateless). Value: [Off], [On] **NOTE** • This function is displayed when [IPv6] is set to [On]. • Selecting [On] displays [IP Address 1] - [IP Address 5] to after restarting the network. • To enter [Default Gateway], set [RA(Stateless)] to [Off]. • [Default Gateway] 128-bits address is expressed in eight groups consisting of four-digit hexadecimal digits. The groups are separated by colon (:).
DHCP	Select whether to use the DHCP (IPv6) server. Value: [Off], [On] **NOTE** • This function is displayed when [IPv6] is set to [On]. • Selecting ON displays IP address in IP Address (Stateful) after restarting the network.
[DNS Server Address]	Set the IP address of DNS (Domain Name System) server. Value: [Auto (DHCP)], [Manual] **NOTE** When [Manual] is selected, enter the DNS server IP address in the Primary and Secondary fields provided.
[DNS over TLS]	Set whether to connect to a DNS server during communication protected by TLS. Value: [Off], [On], [Auto]

IMPORTANT

After changing the setting, restart the network or turn the machine OFF and then ON.

Wired Network Settings

[Home] key > [...] > [System Menu] > [Network Settings] > [Wired Network Settings]

Configure Wired Network Settings.

TCP/IP Settings

[TCP/IP]

Select whether to use TCP/IP Protocol.

Value: [Off], [On]

[IPv4 Settings]

Set up TCP/IP (IPv4) to connect to the network.

This setting is available when [TCP/IP] is [On].

Item	Description
[DHCP]	Select whether to use the DHCP (IPv4) server. Value: [Off], [On]
[Auto-IP]	Select whether to use Auto-IP. Value: [Off], [On]
[IP Address]	Set the IP address. Value: ###.###.###.### **NOTE** When DHCP is set to [On], the value cannot be entered.
[Subnet Mask]	Set the IP subnet mask. Value: ###.###.###.### **NOTE** When DHCP is set to [On], the value cannot be entered.
[Default Gateway]	Set the IP gateway address. Value: ###.###.###.### **NOTE** When DHCP is set to [On], the value cannot be entered.

Item	Description
[DNS Server Address]	Set the IP address of DNS (Domain Name System) server. Value: [Auto (DHCP)], [Manual] **NOTE** When [Manual] is selected, enter the DNS server IP address in the Primary and Secondary fields provided.
[DNS over TLS]	Set whether to connect to a DNS server during communication protected by TLS. Value: [Off], [On], [Auto]

IMPORTANT

- When setting the Auto-IP, enter "0.0.0.0" in IP Address.
- After changing the setting, restart the network or turn the machine OFF and then ON.

[IPv6 Settings]

Set up TCP/IP (IPv6) to connect to the network. This setting is available when [TCP/IP] is [On].

Item	Description
[IPv6]	Select whether to use IPv6. Value: [Off], [On] **NOTE** Selecting [On] displays IP address in [Link Local] after restarting the network.

Item	Description
[IP addr.(LinkLocal)]	Manually specify the IP address, prefix length, and gateway address of TCP/IP (IPv6). Value **[IP Address]** 128-bits address is expressed in eight groups consisting of four-digit hexadecimal digits. The groups are separated by colon (:). **[Prefix Length]** 0 to 128 **[Default Gateway]** 128-bits address is expressed in eight groups consisting of four-digit hexadecimal digits. The groups are separated by colon (:). **NOTE** • This function is displayed when [IPv6] is set to [On].
[RA(Stateless)]	Select whether to use RA (Stateless). Value: [Off], [On] **NOTE** • This function is displayed when [IPv6] is set to [On]. • Selecting [On] displays [IP Address 1] - [IP Address 5] to after restarting the network. • To enter [Default Gateway], set [RA(Stateless)] to [Off]. • [Default Gateway] 128-bits address is expressed in eight groups consisting of four-digit hexadecimal digits. The groups are separated by colon (:).
DHCP	Select whether to use the DHCP (IPv6) server. Value: [Off], [On] **NOTE** • This function is displayed when [IPv6] is set to [On]. • Selecting ON displays IP address in IP Address (Stateful) after restarting the network.

Item	Description
[DNS Server Address]	Set the IP address of DNS (Domain Name System) server. Value: [Auto (DHCP)], [Manual] **NOTE** When [Manual] is selected, enter the DNS server IP address in the Primary and Secondary fields provided.
[DNS over TLS]	Set whether to connect to a DNS server during communication protected by TLS. Value: [Off], [On], [Auto]

IMPORTANT

After changing the setting, restart the network or turn the machine OFF and then ON.

Others

Item	Description
[LAN Interface]	Specify the settings for the LAN interface to be used. Value: [Auto], [10BASE-Half], [10BASE-Full], [100BASE-Half], [100BASE-Full], [1000BASE-T]

IMPORTANT

After changing the setting, restart the network or turn the machine OFF and then ON.

Protocol Settings

[Home] key > [...] > [System Menu] > [NetworkSettings] > [Protocol Settings]

Configures protocol settings.

[SMTP (Email TX)]

➡ Email Settings (page 221)

[POP3 (Email RX)]

➡ POP3 (page 221)

[FTP Server (Reception)]

Item	Description
[Protocol Settings]	Set whether to send documents using FTP.*1 Value: Off, On
[Available Network]	Set whether to enable this function for each network of Wi-Fi Direct, Wi-Fi and wired. Value: [Disable], [Enable]

[WSD Print]

➡ WSD Print (page 222)

[LPD]

Item	Description
[Protocol Settings]	Set whether to send documents using LPD.*1 Value: Off, On
[Available Network]	Set whether to enable this function for each network of Wi-Fi Direct, Wi-Fi and wired. Value: [Disable], [Enable]

[Raw]

Item	Description
[Protocol Settings]	Set whether to receive documents using the Raw Port.*1 Value: Off, On
[Available Network]	Set whether to enable this function for each network of Wi-Fi Direct, Wi-Fi and wired. Value: [Disable], [Enable]

[IPP]

Item	Description
[Protocol Settings]	Set whether to send documents using IPP. To use it, select On in these settings, and select [Off] in [TLS] from "SecuritySettings". Then select [Not Secure (IPPS & IPP)] in the security settings from Command Center RX. The default port number is 631. Value: Off, On, 1 to 32767 (Port Number)
[Available Network]	Set whether to enable this function for each network of Wi-Fi Direct, Wi-Fi and wired. Value: [Disable], [Enable]

[IPP over TLS]

Item	Settings
[Protocol Settings]	Sets whether to receive documents using TLS-protected IPP. To use it, select On in these settings, and select [On] in [TLS] from "SecuritySettings". The factory default port number is 443.*1*2 Value: Off, On, 1 to 32767 (Port Number) **NOTE** If the setting is [On], a TLS certificate is required. The factory certificate is the certificate owned by the machine.
[Available Network]	Set whether to enable this function for each network of Wi-Fi Direct, Wi-Fi and wired. Value: [Disable], [Enable]

[HTTP]

Item	Description
[Protocol Settings]	Set whether to communicate using HTTP.*1 Value: Off, On
[Available Network]	Set whether to enable this function for each network of Wi-Fi Direct, Wi-Fi and wired. Value: [Disable], [Enable]

[HTTPS]

Item	Description
[Protocol Settings]	Select whether to communicate using HTTPS.*1*2 Value: Off, On
[Available Network]	Set whether to enable this function for each network of Wi-Fi Direct, Wi-Fi and wired. Value: [Disable], [Enable]

[LDAP]

Select whether to use LDAP.

Value: Off, On

[SNMPv1/v2c]

Item	Description
[Protocol Settings]	Select whether to communicate using SNMP.*1 Value: Off, On
[Available Network]	Set whether to enable this function for each network of Wi-Fi Direct, Wi-Fi and wired. Value: [Disable], [Enable]

[SNMPv3]

Item	Description
[Protocol Settings]	Set whether to communicate using SNMPv3.*1 Value: Off, On
[Available Network]	Set whether to enable this function for each network of Wi-Fi Direct, Wi-Fi and wired. Value: [Disable], [Enable]

[Enhanced WSD]

Item	Description
[Protocol Settings]	Set whether to use our proprietary web services.*1 Value: Off, On **NOTE** If you select [Off], the WIA driver and TWAIN driver are not available.
[Available Network]	Set whether to enable this function for each network of Wi-Fi Direct, Wi-Fi and wired. Value: [Disable], [Enable]

[Enhanced WSD over TLS]

Item	Description
[Protocol Settings]	Set whether to use our proprietary Web service on TLS.*1*2 Value: Off, On **NOTE** If you select [Off], the WIA driver and TWAIN driver are not available.
[Available Network]	Set whether to enable this function for each network of Wi-Fi Direct, Wi-Fi and wired. Value: [Disable], [Enable]

[VNC (RFB)]

Item	Description
[Protocol Settings]	Set when using a remote operation by starting up a VNC Viewer other than ours (example: Real VNC). The default port number is 9062.*1 Value: [Off], [On], 1 to 32767 (Port Number)
[Available Network]	Set whether to enable this function for each network of Wi-Fi Direct, Wi-Fi and wired. Value: [Disable], [Enable]

[VNC (RFB) over TLS]

Item	Description
[Protocol Settings]	Set when using a remote operation protected by TLS by starting up a VNC Viewer other than ours (example: Real VNC). The default port number is 9063.*1*2 Value: [Off], [On], 1 to 32767 (Port Number) **NOTE** If the setting is [On], a TLS certificate is required. The factory certificate is the certificate owned by the machine.
[Available Network]	Set whether to enable this function for each network of Wi-Fi Direct, Wi-Fi and wired. Value: [Disable], [Enable]

[Enhanced VNC ov TLS]

Item	Description
[Protocol Settings]	Start Command Center RX and set for using TLS-protected remote operation. The default port number is 9061.*1*2 Value: [Off], [On], 1 to 32767 (Port Number) **NOTE** • The factory default setting is [On].
[Available Network]	Set whether to enable this function for each network of Wi-Fi Direct, Wi-Fi and wired. Value: [Disable], [Enable]

*1 The setting will be changed after restarting the device or network.

*2 In "SecuritySettings" set [TLS] to [On].

➡ Security Settings (page 259)

IMPORTANT

Depending on the protocol, it may be necessary to restart the network or turn the power off/on after changing the settings.

Ping

[Home] key > [...] > [System Menu] > [Network Settings] > [Ping]

Item	Description
[Ping]	Check if you can communicate with the destination by entering the host name or IP address of the destination. **NOTE** This function is not displayed when [Primary Network] is specified in [Optional Network]. ➡ Primary Network (Client) (page 257)

Bonjour

[Home] key > [...] > [System Menu] > [Network Settings] > [Bonjour]

Item	Description
[Protocol Settings]	Select whether to use Bonjour. Value: Off, On
[Available Network]	Set whether to enable this function for each network of Wi-Fi Direct, Wi-Fi and wired. Value: [Disable], [Enable]

IP Filter (IPv4)

[Home] key > [...] > [System Menu] > [Network Settings] > [IP Filter (IPv4)]

Item	Description
[IP Filter (IPv4)]	Configure the IP Filter Setting. IP Filter is a function to restrict the access to the machine by the IP address and protocol. The IP address or network address of permitted hosts is set from Command Center RX. Not setting the IP Filter will allow access from all hosts. Value: [Off], [On] ➡ **Command Center RX User Guide**

IP Filter (IPv6)

[Home] key > [...] > [System Menu] > [Network Settings] > [IP Filter (IPv6)]

Item	Description
[IP Filter (IPv6)]	Configure the IP Filter Setting. IP filter is a function used to restrict the access to the machine by setting the IP address and protocol. The IP address or network address of permitted hosts is set from Command Center RX. Not setting the IP Filter will allow access from all hosts. Value: [Off], [On] ➡ **Command Center RX User Guide**

[IPSec]

[Home] key > [...] > [System Menu] > [Network Settings] > [IPSec]

Item	Description
[IPSec]	Set whether or not you use the IPSec. Value: [Off], [On]

Restart Network

[Home] key > [...] > [System Menu] > [Network Settings] > [Restart Network]

Item	Description
[Restart Network]	Restarts the network.

Primary Network (Client)

[Home] key > [...] > [System Menu] > [Network Settings] > [Primary Network (Client)]

Select the network interface to be used for the send function that this machine functions as a client, the network authentication and connecting to external address book.

Value: [Wi-Fi], [Wired Network]

- [Wi-Fi] is displayed when Wi-Fi module is installed.
- E-mails can be set and used separately through "[Wired Network] or [Wi-Fi]".

Restart Entire Device

You can restart the device without turning the power switch off. Use this to deal with any unstable operation by the machine. (Same as the computer restart.)

Security Settings

Configures security settings.

[Home] key > [...] > [System Menu] > [Security Settings]

Item	Description
[Security Quick Setup]	Select security settings from levels 1 to 3 that are close to your environment, and change (customize) the functions as needed. Value **[Level 1]** The factory default setting. **[Level 2]** The security function of the network will change. **[Level 3]** All functions that protect the machine are enabled, and functions that do not protect the machine are disabled. **NOTE** • This function can be set only when logged in with administrator privileges. ➡ Log in as Machine Administrator or Administrator (page 96) • Restart the device or network after selecting a level for the settings to take effect. ➡ Restart Entire Device (page 258) ➡ Restart Network (page 256) • For more information on each security level setting, refer to the following: ➡ Security Quick Setup Function List (page 467)
[USB Host]	This locks and protects the USB port (USB host). Value: [Unblock], [Block]
[USB Device]	This locks and protects the USB interface connector (USB Device). Value: [Unblock], [Block]
[USB Drive]	This locks and protects the USB memory slot. Value: [Unblock], [Block] **NOTE** This function can be configured when the USB host is set to [Unblock].

Item	Description
[Restart Entire Device]	Restart the machine without turning the power switch off. **IMPORTANT** Restart the Device or turn the power off and on to reflect the change in the "Interface Block Setting".
[Job Status/Logs Settings]	➡ Job Status/Logs Settings (page 230)
[Security Level]	Specify the security level. Value **[Low]** This mode is used during maintenance. Do not use normally. **[High]** This is the security setting we recommend. Normally use this setting. **[Very High]** In addition to the [High] state, disables changing of machine settings with external commands. **NOTE** This function can be set only when logging in with the authority of the device administrator. ➡ Adding a User (Local User List) (page 283)
[Remote Printing]	➡ Remote Printing (page 226)
[RAM Disk Setting]	Create a RAM disk and set its capacity. You can print data from the job box by creating a RAM disk. [RAM Disk Size] Value: Off, On **NOTE** • If On is selected, set the size. Setting range varies depending on size of onboard memory and optional memory usage. **IMPORTANT** After changing the setting, restart the system or turn the machine OFF and then ON.

Item	Description
[Software Verification]	Verify the software in the machine. Select [Start] to run the verification. If you experience any abnormalities in software verification, contact your service representative.
[Authentic. on FW Update]	Request administrator to approve when updating firmware. Value: [Off], [On]
[Allowlisting]	In case if the unauthorized program or the program that has tampered are installed, the stored data or the contents of the communication in this program might be stolen. Once this function is activated, execution of the unauthorized software or the tampering of the software can be prevented, and possible to maintain the reliability of the system. Value: [Off], [On] **NOTE** • After setting it to [On], you need to shut down and restart the machine. • Enabling this feature slows the machine start-up. • If malware is detected, an event report can be used as a way to understand its content. The Event reports can be enabled by the Command Center RX > "Management Settings: Notification/Report" > [Recipient 1 E-mail Address] to [Recipient 3 E-mail Address] and [Notify when Malicious Program is Detected] is set to [On].
[Remaining Print Job]	Value:[Cancel], [Continue]
[Secure Boot]	Value:[BIOS], [BIOS + Firmware]
[FW Upgrade Tool]	Value:[Prohibit], [Permit]
[Data Security]	➡ [Data Sanitization] (page 261)
[Account Lockout Settings]	➡ User Account Lockout Setting (page 281)
[Password Policy Settings]	➡ Password Policy Settings (page 282)
[TLS]	Set whether to use TLS for communication. Value: [Off], [On]
[Network Access]	Set whether to use SNMP or IPSec for communication. ➡ SNMPv1/v2c (page 248) ➡ SNMPv3 (page 248) ➡ [IPSec] (page 255)

[Data Sanitization]

This function returns the following information stored in the machine to the factory default.

- System Settings
- Data in the Custom Box
- Optional applications

NOTE

- Print [Data Sanitization] and check that security data has definitely been erased.
- You cannot cancel a process in the middle.
- Disconnect any modular or network cables before performing this operation.
- Before executing this function, set [USB Host], [USB Device] and [USB Drive] to [Unblock].

  ➡ Security Settings (page 259)
- Do not turn off the power during data sanitization. If the power is turned off during erasing, erasing will be performed automatically after the power is turned on, but complete operation cannot be guaranteed.

Item	Settings
[Run Immediately]	Execute security data sanitization.
[Reserve Sanitization Time]	The address information and image data in the machine will be completely erased at the specified time. Value: [On], [Off] If you select [On], set the date and time for complete erasure. Value: Year (2000 to 2035), Month (1 to 12), Day (1 to 31), and Hour (0 to 23).
[Dev Use After Sanitization]	After data sanitization, the usage of this machine will be restricted. If [Prohibit] is selected, machine operation is disabled. Value:[Prohibit], [Permit]
[Data Sanitization Report]	Prints the data sanitization report.

JobAccounting/Authentic.

[Home] key > [...] > [System Menu] > [JobAccounting/Authentic.]

Configures settings related to machine management.

➡ Overview of User Login Administration (page 279)

➡ Overview of Job Accounting (page 297)

➡ Unknown User Settings (page 312)

Add/Delete Application

[Home] key > [...] > [System Menu] > [Add/Delete Application]

Configure the application settings.

➡ Overview of the Applications (page 439)

Adjustment/Maintenance

Adjust printing quality and conduct machine maintenance.

[Home] key > [...] > [System Menu] > [Adjustment/Maintenance]

[Toner SaveLevel]

Item	Description
[Printer]	Select the default Toner Save Level (EcoPrint). Value: 1 to 5 Raising the level reduces toner consumption, but image quality falls.

[Color Registration - Normal]

When first installing the machine or moving it to a new location, color drift during printing may occur. Use this function to correct the color position of each of cyan, magenta and yellow to resolve color drift.

➡ Performing Color Registration Procedure (Standard Registration) (page 422)

[Color Registration - Manual]

When first installing the machine or moving it to a new location, color drift during printing may occur. Use this function to correct the color position of each of cyan, magenta and yellow to resolve color drift. If standard registration does not resolve the problem or to perform more detailed settings, use the detailed registration. See Detailed Registration in the link below.

➡ Performing Color Registration Procedure (Detailed Registration) (page 425)

[Image Adjustment]

Item	Description
[Drum Refresh]	Value: [Not Execute], [Execute]
[Developer Refresh]	Value: [Not Execute], [Execute]
[Laser Scanner Cleaning]	Value: [Not Execute], [Execute]
[Calibration]	Value: [Not Execute], [Execute]

[Quiet Mode]

Item	Description
[Quiet Mode]	Set the quiet mode. Select this mode when the running noise is uncomfortable. Value: [Off], [On]

[Altitude Adjustment]

Item	Description
[Altitude Adjustment]	Value: [Normal], [1001 - 2000m], [2001 - 3000m], [3001 - 3500m]

[MC]

Item	Description
[MC]	Value: [1] to [7]

[Diagnostics]

[Home] key > [...] > [System Menu] > [Adjustment/Maintenance] > [Diagnostics]

[Software Verification]

Item	Description
[Expected]	Display Value.
[Result Value]	Display Value.
[Start Verification]	Run Verification.

[Test Page]

Output the test page for identifying the cause of the image defects.

Item	Description
[Test Page]	Value: [Cancel], [Print]

[Event Log]

Item	Description
[Event Log]	Value: [Cancel], [Print]

[LLU RPT]

Item	Description
[LLU RPT]	Value: [Cancel], [Print]

[Restart/Initialization]

Item	Description
[Restart Network]	➡ Restart Network (page 256)
[Restart Entire Device]	
[Format SD Card]	Format the SD card. To use an SD card, it is necessary to format the SD card on this machine first. When the formatting is complete, data can be written to the SD card.

[Service Settings]

Perform the maintenance and inspection of the machine. This menu is primarily used by service personnel for maintenance work.

9 User Authentication and Accounting (User Login, Job Accounting)

Overview of User Login Administration

User login administration specifies how the user access is administered on this machine. Enter a correct login user name and password for user authentication to login.

1 Enable User Login Administration

➡ Enable User Login Administration (page 280)

2 Set the user

➡ Setting User Login Administration (page 281)

3 Enter the login user name and password and execute the job

➡ Login (page 56)

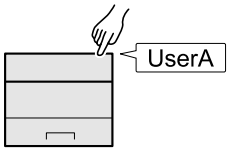

Managing the Job Account from PC

In addition to the above settings, the following are necessary to manage the job account from PC.

To Manage the Users to Print from PCs

Printer driver settings are necessary to manage the users that print on the machine from PCs.

➡ Managing the Users that Print on This Machine from a PC (page 287)

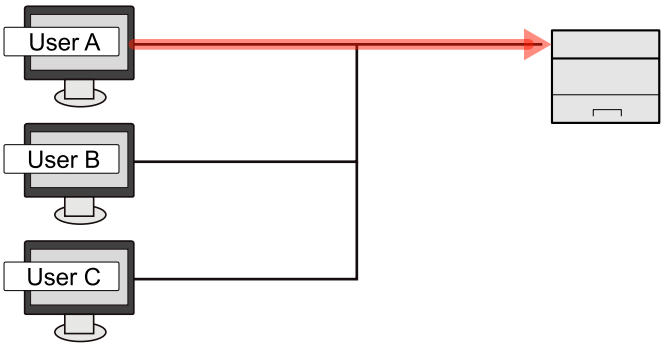

Enable User Login Administration

This enables user login administration.

1 Display the screen.

1 [Home] key > [...] > [System Menu] > [JobAccounting/Authentic.]

NOTE

If the user authentication screen appears, log in with a user who has the privilege to configure this setting. If you do not know your login user name or password, please contact your administrator.

2 [User Login] > [OK] key

2 Configure the settings.

- Select [Off] to disable user login administration.
- If [Netwk Authentic.] is selected, set [Netwk Auth. Set.].

➡ Server Settings (page 289)

NOTE

If you cannot login because of the setting of the machine, login with any administrator registered in the local user list and correct the settings.

Setting User Login Administration

This registers, alters and deletes users and configures the settings for User Login Administration.

Authentication Security

If user authentication is enabled, configure the user authentication settings.

User Account Lockout Setting

You can prohibit the use of a user account if an incorrect password is entered repeatedly to login with that account.

1 **Display the screen.**

1 [Home] key > [...] > [System Menu] > [JobAccounting/Authentic.]

NOTE

If the user authentication screen appears, log in with a user who has the privilege to configure this setting. If you do not know your login user name or password, please contact your administrator.

2 Select [Account Lockout Settings]

2 **Configure the settings.**

Configurable items are as follows:

[Lockout]

Select whether or not account lockout policy is enabled.

Value: [Off], [On]

[Lockout Policy]

Specify the conditions and the extent to which the account lockout is applied.

Value

[Number of Retries until Locked]: Specify how many login retries are allowed until the account is locked out. (1 to 10 times)

[Lockout Duration]: Specify how long the account is to be locked out until it is unlocked. (1 to 60 minutes)

[Lockout Target]: Specify the extent to which the account lockout is applied. You can select from [All] or [Remote Login Only]. Remote Login Only locks out all operations from outside the operation panel.

[Locked out Users List]

Displays a list of locked out users. You can unlock a user by selecting the user in the list, and selecting [Unlock].

NOTE

This function is displayed when account lockout policy is enabled.

Password Policy Settings

You can prohibit the setting and use of passwords that do not comply with the password policy. Setting the Password Policy makes it more difficult to break the password.

1 Display the screen.

1 [Home] key > [...] > [System Menu] > [JobAccounting/Authentic.]

NOTE

If the user authentication screen appears, log in with a user who has the privilege to configure this setting. If you do not know your login user name or password, please contact your administrator.

2 Select [User Login] > [Password Policy Settings]

2 Configure the settings.

Configurable items are as follows:

[Password Policy]

Select whether or not password policy is enabled.

Value: [Off], [On]

[Minimum Password Length]

Set the minimum password length of characters for password.

Value: [Off], [On] (1 to 64 characters)

[Password Complexity]

Set the password complexity.

Value

[Reject common PW]: [Off], [On]

[At least one uppercase letter (A-Z)]: [Off], [On]

[At least one lowercase letter (a-z)]: [Off], [On]

[At least one number (0-9)]: [Off], [On]

[At least one symbol]: [Off], [On]

[Maximum Password Age]

Set the maximum password age.

Value: [Off], [On] (1 to 180 days)

[Policy Violated User List]

List of users who do not meet password policy requirements.

Adding a User (Local User List)

You can add 1 user (including the default login user name).

1 Display the screen.

1 [Home] key > [...] > [System Menu] > [JobAccounting/Authentic.]

NOTE

If the user authentication screen appears, log in with a user who has the privilege to configure this setting. If you do not know your login user name or password, please contact your administrator.

2 [Add/Edit Local User] > [OK] key

2 Register the user.

1 [Menu] key > [Add User]

[Login User Name]

Enter the login user name to login (up to 64 characters). The same login user name cannot be registered.

2 Select the [Add].

The User Name is “Power User”.

3 Enter the user information.

Select User

[Login Password]

Enter the password to login (up to 256 characters).

[Access Level Settings]

User access privileges are [User].

4 Select the [OK] key.

The user information is configured.

Changing User Properties for Local Users (Admin, DeviceAdmin, PowerUser)

Types of user properties that could be changed may be different depending on user access privilege.

NOTE

To change the user information of the machine administrator, you must log in with machine administrator authority. You can only view user information if you log in as a regular user.

If the user authentication screen appears, log in with a user who has the privilege to configure this setting. If you do not know your login user name or password, please contact your administrator.

1 Display the screen.

1 [Home] key > [...] > [System Menu] > [JobAccounting/Authentic.] > [Add/Edit Local User]

NOTE

If the user authentication screen appears, log in with a user who has the privilege to configure this setting. If you do not know your login user name or password, please contact your administrator.

2 Change the user properties.

1 Editing user properties can be done in [Local User List] > [...] beside the username then [Access Level Settings].

2 Configure the settings.

[User Name], [Enter ID], and [Access Level Settings] cannot be changed.

- [Login User Name]*1
- [Login Password]
- [Permit SysAdmin]*1

*1 You can change only when you log in with machine administrator authority.

3 Select the [OK] key.

The user information is changed.

Changing User Properties for Network Users

Edit the network user properties that were registered with settings concerning the granting of local user rights.

➡ Configure Network User Rights (page 290)

NOTE

To change the user information of the machine administrator, you must log in with machine administrator authority. You can only view user information if you log in as a regular user.

If the user authentication screen appears, log in with a user who has the privilege to configure this setting. If you do not know your login user name or password, please contact your administrator.

1 Display the screen.

1 [Home] key > [...] > [System Menu] > [JobAccounting/Authentic.]

NOTE

If the user authentication screen appears, log in with a user who has the privilege to configure this setting. If you do not know your login user name or password, please contact your administrator.

2 Change the user properties.

1 Select the user whose properties you wish to change.

[Add/Edit Local User] > [...]

2 Configure the settings.

- [User Name]
- [Login User Name]
- [Login Password]
- [Confirm Password]
- [Access Level Settings]

  The following are the settings inside Access Level Settings.

  - [Access Level]
  - [Paper Settings]
  - [User/Job Account Info.]
  - [Basic Network Settings]
  - [Basic Device Settings]
  - [Advanced Dev./NW Set.]
  - [Account ID: Cannot be edited]

3 Select the [OK] key.

The user information is changed.

Deleting a User

1 Display the screen.

1 [Home] key > [...] > [System Menu] > [JobAccounting/Authentic.]

NOTE

If the user authentication screen appears, log in with a user who has the privilege to configure this setting. If you do not know your login user name or password, please contact your administrator.

2 Deleting a user.

1 Select the user to delete.

[Add/Edit Local User] > [...]

2 [Delete] > [Delete]

The selected user will be deleted.

NOTE

The default user with machine administrator rights cannot be deleted.

➡ Administrator Privileges Overview (page 95)

Managing the Users that Print on This Machine from a PC

To manage the users that print on this machine from a PC, the following settings are necessary in the printer driver. Instructions are based on interface elements as they appear in Windows 10.

1 Display the screen.

1 Select the Windows [Start] button → [Control Panel] → [Devices and Printers].

NOTE

For Windows 11, select the [Start] button → [All apps] → [Windows Tools] → [Control Panel] → [Devices and Printers].

2 Right-click the printer driver icon of the machine, and click the [Printer properties] menu of the printer driver.

3 Click [Administrator] on the [Device Settings] tab.

2 Configure the settings.

1 Select [User Login] on the [User Login] tab.

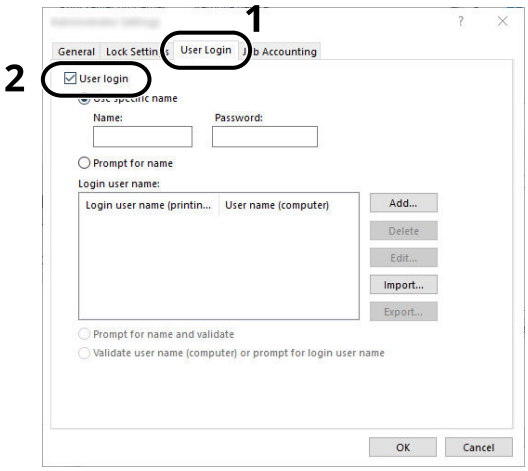

2 Set the User Login Administration.

[Use specific name]

This option can be used to specify a user name and password to use the same User login for every print job. If this option is selected, the user does not have to type the name and password for each print job.

[Prompt for name]

A screen for entering the user name and password will be displayed when attempting a printing. The user name and password must be entered each time a printing is attempted.

[Prompt for name and validate]

A screen for entering the user name and password will be displayed when attempting a printing. The user name and password stored in the "Login user names list" needs to be entered. The user name and password must be entered each time a printing is attempted.

[Validate user name (computer) or prompt for login user name]

When printing, the Windows user name is searched in the "Login user names" and printing is possible if the name is registered. If the name is not registered, the printing will be canceled for users with only user authority. If the user has administrator privileges, the screen to enter the user name and password will appear.

3 Click [OK].

NOTE

For other settings of job accounting, refer to the following:
➡ **Printer Driver User Guide**

Server Settings

Set the server type when network authentication is enabled.

1 Display the screen.

1 [Home] key > [...] > [System Menu] > [JobAccounting/Authentic.]

NOTE

If the user authentication screen appears, log in with a user who has the privilege to configure this setting. If you do not know your login user name or password, please contact your administrator.

2 Select [User Login] > [Network Authentication] > [Service Type]

2 Configure the settings.

1 Select [NTLM], [Kerberos] or [Ext.] as the server type, and select the [OK] key.

When [NTLM] or [Kerberos] is selected, you can configure multiple authentication servers.

2 Enter the host name (256 characters or less) for the Authentication Server, and select the [OK] key.

When selecting [Ext.]. as the server type, enter the port number.

3 Enter the domain name for the Authentication Server, and select the [OK] key.

If domain name is not set, select "----------" and select [Menu]. Select [Edit], select the [OK] key, and enter the domain name (up to 256 characters). Select the [OK] key to register the Default Domain Name. To edit or delete the registered domain name, select the registered domain name, and then select [Menu].

NOTE

- Up to 10 domain names can be registered.
- If the login user name and password are rejected, check the following settings.
  - Network Authentication setting of the machine
  - User property of the Authentication Server
  - Date and time setting of the machine and the Authentication Server

Configure Network User Rights

Select whether or not to grant local user rights to network users. If this setting is applied, when a network user logs in, the logged in network user's information is registered as a local user. By setting the account name on the registered local user information, network users can coordinate with job accounting. Displays the "Domain Name" in the user information for local users with rights.

NOTE

For local user information, refer to the following:

➡ Adding a User (Local User List) (page 283)

1 Display the screen.

1 [Home] key > [...] > [System Menu] > [JobAccounting/Authentic.]

NOTE

If the user authentication screen appears, log in with a user who has the privilege to configure this setting. If you do not know your login user name or password, please contact your administrator.

2 Select [User Login] > [Network Authentication]

2 Configure the settings.

Set [Give Local User Authority] [On] to configure the settings.

[User Full Action]

Configure the action when the number of users is exceeded when granting local user rights.

Value: [Do Not Add New], [Delete Old User]

[Authority When Offline]

Set the expiration date for local user rights that have been granted and that do not require network authentication.

Value: [Always Enabled], [Enabled Period]

If you set [Enabled Period], set the restriction. (up to 180days)

[Local Auth. Def.]

Set the default local user rights that are granted.

[Print Restriction]

Value: [Off], [Reject Usage]

[Print Restriction (Color)]

Value: [Off], [Reject Usage]

[Duplex Restrict.]

Value: [Off], [2-sided Only]

[EcoPrint Restr.]

Value: [Off], [EcoPrint Only]

Obtain NW User Property

Set the required information to obtain the network user property from the LDAP server.

NOTE

To obtain the network user property from the LDAP server, [Netwk Authentic.] must be selected for the user authentication method in [User Login]. In addition, set [LDAP] to [On] in [ProtocolSettings].

➡ Enable User Login Administration (page 280)

Protocol Settings

1 Display the screen

1 [Home] key > [...] > [System Menu] > [JobAccounting/Authentic.]

NOTE

If the user authentication screen appears, log in with a user who has the privilege to configure this setting. If you do not know your login user name or password, please contact your administrator.

2 Select [Obtain NW User Property]

2 Configure the settings.

Set to [On] and configure [Authentic. Type].

[Authentic. Type]*1

Set the authentication method. Select [Simple] or [SASL]. After changing the setting, restart the system or turn the power OFF and then ON.

*1 Appears when the server type is set to "Kerberos" in [Netwk Authentic.].

3 Select [OK].

ID Card Settings

If ID card authentication is enabled, select the authentication type.

NOTE

This functions appears when the Card Authentication kit is activated.

➡ Card Authentication Kit(B) AC <IC card authentication kit (Activate)> (page 438)

Numeric Keypad Login

When IC card authentication is enabled, select whether or not login by numeric keypad is allowed.

1 Display the screen

1 [Home] key > [...] > [System Menu] > [JobAccounting/Authentic.] > [ID Card Settings]

NOTE

If the user authentication screen appears, log in with a user who has the privilege to configure this setting. If you do not know your login user name or password, please contact your administrator.

2 [Key Login] > [OK] key

2 Configure the settings.

1 Select [Permit] or [Prohibit].

Additional Authentication

Select whether or not to require password entry after authenticating by ID card.

NOTE

This function is displayed when "User Login" is enabled.

1 Display the screen

1 [Home] key > [...] > [System Menu] > [JobAccounting/Authentic.] > [ID Card Settings]

NOTE

If the user authentication screen appears, log in with a user who has the privilege to configure this setting. If you do not know your login user name or password, please contact your administrator.

2 [Additional Auth.] > [OK] key

2 Configure the settings.

1 Select [Off], [Use Password], or [Use PIN].

NOTE

[Use PIN] is displayed only when using PIN Code Authorization.

➡ PIN Login (page 295)

Quick Job Printing

Displays a list of print jobs saved to the Stored Job Box when logging in with an IC card via user login.

NOTE

For details on Simple Job Printing, refer to the following:

➡ Simple Job Printing (page 145)

1 Display the screen.

1 [Home] key > [...] > [System Menu] > [JobAccounting/Authentic.]

NOTE

If the user authentication screen appears, log in with a user who has the privilege to configure this setting. If you do not know your login user name or password, please contact your administrator.

2 Select [Quick Job Printing]

2 Configure the settings.

Set "Display List on Login" to [On] to configure the settings.

[Logout after Printing]

Select whether or not to automatically log out after printing.

[Skip PIN & Copies Confirm.]

Select whether or not to skip entering the PIN code and confirming the number of copies when printing when a PIN code is set.

PIN Login

NOTE

When using PIN Code Authorization, the network authentication must be enabled and [Ext.] must be selected for server type.

➡ Enable User Login Administration (page 280)

➡ Server Settings (page 289)

1 Display the screen.

1 [Home] key > [...] > [System Menu] > [JobAccounting/Authentic.] > [PIN Login]

NOTE

If the user authentication screen appears, log in with a user who has the privilege to configure this setting. If you do not know your login user name or password, please contact your administrator.

2 Select [PIN Login].

2 Configure the function.

1 Select [Off] or [On]

Using User Login Administration

This section explains procedures while setting job accounting.

Login/Logout

If user login administration is enabled, the login user name and login password entry screen appears each time you use this machine. Use the procedure below to login and logout.

Login

If the login user name entry screen appears during operations, log in by referring to the following:

➡ Login (page 56)

Logout

When the operation is complete, select the [Logout] key. You will return to the login user name/login password entry screen.

Overview of Job Accounting

Job accounting manages the print count accumulated by individual accounts by assigning an ID to each account.

1 Enable job accounting

➡ Enabling Job Accounting (page 298)

2 Setting an account.

➡ Job Accounting (Local) (page 300)

3 Enter the assigned account ID when performing the job.

➡ Login (page 309)

4 Count the number of pages printed.

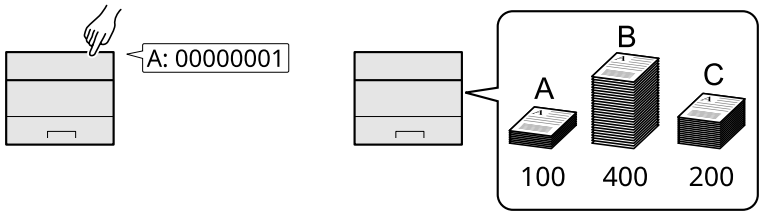

To Manage the Number of Sheets Used on Jobs Printed from a PC

To manage the number of jobs to be printed from the PC on the network, you need to configure settings by using the printer driver on the PC.

1 Set Job Accounting for the PC on the network by using the printer driver.

➡ Job Accounting for Printing (page 304)

2 Execute printing.

3 Count the number of pages printed.

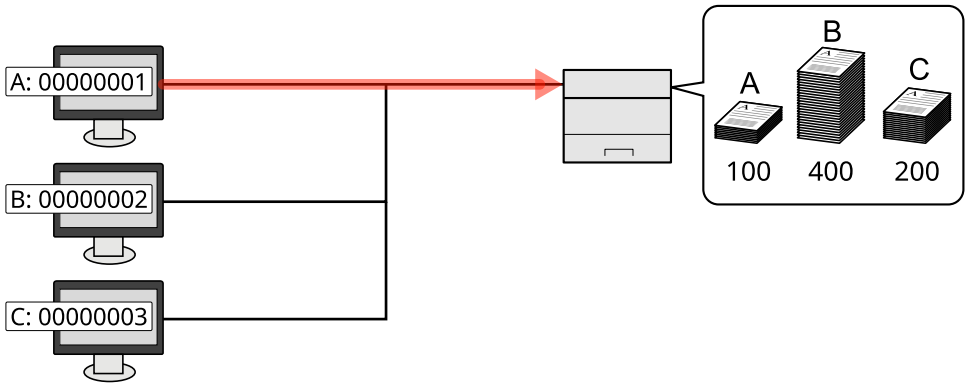

Enabling Job Accounting

1 Display the screen.

1 [Home] key > [...] > [System Menu] > [JobAccounting/Authentic.]

NOTE

If the user authentication screen appears, log in with a user who has the privilege to configure this setting. If you do not know your login user name or password, please contact your administrator.

2 Select [Job Accounting Setting]

2 Configure the settings.

Select [Off] to disable job accounting.

NOTE

When the display returns to System Menu default screen, logout is automatically executed and the screen to enter the Account ID appears. To continue the operation, enter the Account ID.

Job Accounting

Set the Job Accounting method.

1 Display the screen.

1 [Home] key > [...] > [System Menu] > [JobAccounting/Authentic.]

NOTE

If the user authentication screen appears, log in with a user who has the privilege to configure this setting. If you do not know your login user name or password, please contact your administrator.

2 Select [Job Account]

2 Configure the settings.

1 Select [Local] or [Network].

Job Accounting (Local)

You can add, change and delete an account and set the restriction for each account.

Adding an Account

Up to 100 individual accounts can be added.

1 Display the screen.

1 [Home] key > [...] > [System Menu] > [JobAccounting/Authentic.]

NOTE

If the user authentication screen appears, log in with a user who has the privilege to configure this setting. If you do not know your login user name or password, please contact your administrator.

2 Select [Job Accounting] > [Local] > [Add/Edit Job Accounting]

2 Enter the account ID.

1 [Menu] > [Add]

[Enter ID]

Enter the ID as many as eight digits (between 0 and 99999999).

NOTE

Any "Account ID" that has already registered cannot be used. Enter any other account ID.

2 Select the [Add].

A new account is added on the Account List.

This can prohibit printing or restrict the number of sheets to load.

➡ Restricting the Use of the Machine (page 301)

Restricting the Use of the Machine

This section explains how to restrict the use of the machine by account or the number of sheets available.

Restriction Items

Item	Description
[Restrict.(Total)]	Limits the total number of sheets used for printing.
[Restrict.(Color)]	Limits the total number of pages used for color printing.

Applying Restriction

Restriction can be applied in the following modes:

Item	Description
[Off]	No restriction is applied.
[Counter Limit]	Restricts the print counter in one-page increments up to 9,999,999 copies.
[Reject Usage]	Restriction is applied.

Editing an Account

1 Display the screen.

1 [Home] key > [...] > [System Menu] > [JobAccounting/Authentic.]

NOTE

If the user authentication screen appears, log in with a user who has the privilege to configure this setting. If you do not know your login user name or password, please contact your administrator.

2 Select [Job Accounting] > [Local] > [Add/Edit Job Accounting]

2 Edit an account

1 Select the account you want to change the account information.

2 Select [...] of the item.

3 Select the item you wish to change.

4 Change account information by referring to procedure 2 for “Adding an Account” and “Restricting the Use of the Machine.”

➡ Adding an Account (page 300)

➡ Restricting the Use of the Machine (page 301)

5 Select the [Add].

The account information is changed.

Deleting an Account

1 Display the screen.

1 [Home] key > [...] > [System Menu] > [JobAccounting/Authentic.]

NOTE

If the user authentication screen appears, log in with a user who has the privilege to configure this setting. If you do not know your login user name or password, please contact your administrator.

2 Select [Add/Edit Job Accounting].

2 Delete Account.

1 Select the account to delete.

2 [Menu] > [Delete] > [Yes]

The account is deleted.

Job Accounting for Printing

To manage the number of pages used for jobs to be printed from the PC, you need to configure the following settings by using the printer driver. Instructions are based on interface elements as they appear in Windows 10.

1 Display the screen.

1 Select the [Start] button in Windows, select → [Windows System], → [Control Panel] → [Devices and Printers].

NOTE

For Windows 11, select the [Start] button → [All apps] → [Windows Tools] → [Control Panel] → [Devices and Printers].

2 Right-click the printer driver icon of the machine, and click the [Printer properties] menu of the printer driver.

3 Click [Administrator] on the [Device Settings] tab.

2 Configure the settings.

1 Select [Job accounting] on the [Job Accounting] tab.

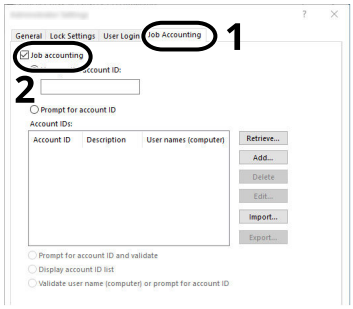

2 Set the Job Accounting.

[Use Specific Account ID]

Enter the Account ID. Printing will be performed using the entered Account ID. If this option is selected, the user does not have to enter the Account ID for each print job.

[Prompt for account ID]

A screen for entering the Account ID will be displayed when attempting a printing. The Account ID must be entered each time a printing is attempted.

[Prompt for account ID and validate]

A screen for entering the Account ID will be displayed when attempting a printing. The Account ID stored in the Account ID list needs to be entered. The Account ID must be entered each time a printing is attempted.

NOTE

This is enabled only if Account IDs are added.

[Display account ID list]

The Account ID list is displayed when printing. The Account ID to be used needs to be selected from the list.

NOTE

This is enabled only if Account IDs are added.

[Validate user name (computer) or prompt for account ID]

When printing, the Windows user name is searched in the "Account IDs" and printing is possible if the name is registered. If the Account ID is not registered, the screen for entering the Account ID will appear.

NOTE

This is enabled only if Account IDs are added.

3 Click [OK].

NOTE

For other settings of job accounting, refer to the following:

➡ **Printer Driver User Guide**

Configuring Job Accounting

Counting the Number of Pages Printed

This counts the number of pages printed. Counts are classified into Each Job Accounting. A new count can also be started after resetting the count data which was stored for a certain period of time.

The items that can be referenced are as follows:

Item	Description
[Printed Pages]	Displays the number of pages used in printing for each of the following item. **[Count by Function]** Black & White The number of pages used for black and white printing is displayed. Full Color The number of pages used for color printing is displayed. Black & White + Full Color Displays the total number of pages used for both. **[Count by Duplex]** 1-sided The number of pages used for one-sided printing is displayed. 2-sided The number of pages used for two-sided printing is displayed. Total The number of pages used for color printing, black and white printing, and the total for both is displayed. **[Count by Combine]** None The number of pages used for printing without Combine. 2 in 1 The number of pages used for Combine printing (2 in 1) is displayed. 4 in 1 The number of pages used for Combine printing (4 in 1) is displayed.
[Counter Reset]	Resets the counter. Select [Yes] on the confirmation screen.

Counting the Number of Pages for Each Account

This counts the number of pages for each account and resets the counts by account. When checking Each Job Accounting, select the account for which you want to check the count.

1 Display the screen.

1 [Home] key > [System Menu] > [JobAccounting/Authenticat.] > [Job Accounting Counter]

Select [...] of the item, then select [Print Pages].

NOTE

If the user authentication screen appears, log in with a user who has the privilege to configure this setting. If you do not know your login user name or password, please contact your administrator.

2 Check the number of pages.

1 Select the account.

2 Check the count.

Select [Counter Reset] to reset the counter.

3 Confirm the count and select the [OK] key.

Print Accounting Report

The total pages counted of all relevant accounts can be printed as an accounting report.

1 Prepare paper.

Check that A4 or Letter paper is loaded in the cassette.

2 Display the screen.

1 [Home] key > [...] > [System Menu] > [JobAccounting/Authenticat.]

NOTE

If the user authentication screen appears, log in with a user who has the privilege to configure this setting. If you do not know your login user name or password, please contact your administrator.

2 [Job Accounting] > [Local]

3 Print.

1 [Print Accounting Report] > [Print]

Accounting report is printed.

Reports have different formats depending on how the count of printers is administered. If count by paper size is being performed, then the report will be printed per size.

Using Job Accounting

This section explains procedures while setting job accounting.

Login

If job accounting is enabled, an account ID entry screen appears each time you use this machine.

1 Enter the account ID using the numeric keys > [Login]

NOTE

- If you entered a wrong character, select [Clear] key and enter the account ID again.
- If the entered account ID does not match the registered ID, a warning beep will sound and login will fail. Enter the correct account ID.

If user login administration is enabled, the screen to enter the login user name and password appears instead of the screen to enter the account ID. Enter a login user name and password to login. If the user has already registered the account information, the account ID entry would be skipped.

➡ Adding a User (Local User List) (page 283)

2 Proceed to complete the rest of the steps.

Logout

1 **When the operation is complete, select the [Logout]key. Return to the Enter Account ID screen.**

Apply Limit

This specifies how the machine behaves when the counter has reached the limit of restriction. The action is as follows:

Item	Description
[Immediately]	Job stops when the counter reaches its limit.
[Subsequently]	The print job currently underway will continue but the subsequent job will be rejected.

1 Display the screen.

1 [Home] key > [...] > [System Menu] > [JobAccounting/Authenticat.]

NOTE

If the user authentication screen appears, log in with a user who has the privilege to configure this setting. If you do not know your login user name or password, please contact your administrator.

2 [Job Accounting Setting] > [Apply Limit]

2 Configure the function.

1 Select [Immediately] or [Subsequently].

Unknown User Settings

Unknown ID Job

This specifies the behavior for handling the jobs sent with unknown or unsent login user names or User ID. If the User Login is set to invalid and Job Accounting is set to valid, follow the procedure when the Account ID is unknown.

NOTE

This function is available when Authentication is enabled.

1 Display the screen.

1 [Home] key > [...] > [System Menu] > [JobAccounting/Authenticat.]

NOTE

If the user authentication screen appears, log in with a user who has the privilege to configure this setting. If you do not know your login user name or password, please contact your administrator.

2 Select [Unknown ID Job]

2 Configure the settings.

Select [Reject] or [Permit].

[Permit]

The job is permitted to be printed.

[Reject]

The job is rejected (not printed).

Registering Information for a User whose ID is Unknown

If you register user information for a user whose ID is unknown, you can check information on the Job Status or Job History screens. In addition, you can restrict available functions.

NOTE

This function is displayed when [Unknown ID Job] is set to [Permit].

➡ Unknown ID Job (page 312)

1 Display the screen

1. [Home] key > [...] > [System Menu] > [JobAccount/Authenticat.]

   NOTE

   If the user authentication screen appears, log in with a user who has the privilege to configure this setting. If you do not know your login user name or password, please contact your administrator.

2. Select [User Property]

2 Enter the user information.

Select [Edit] or [Change], [Detail], enter each detail, then select [OK] key.

[User Name]

Enter the name displayed on the user list (up to 32 characters).

[Enter ID]

Register an account ID for a user whose ID is unknown.

[Auth. Rules]

Set usage authority.

The following restriction items are available:

[Print Restrict.]

Select whether or not to reject usage of print functions for the printer.

Applicable print functions are as follows:

- Print from PC

10 Troubleshooting

Regular Maintenance

Cleaning

Clean the machine regularly to ensure optimum printing quality.

CAUTION

For safety, always unplug the power cord before cleaning the machine.

Cleaning Paper Transfer Unit

The paper transfer unit should be cleaned each time the toner container is replaced. To maintain optimum print quality, it is also recommended that the inside of the machine be cleaned once a month as well as when the toner container is replaced.

Print problems such as soiling of the reverse side of printed pages may occur if the paper transfer unit becomes dirty.

CAUTION

Some parts are very hot inside the machine. Exercise caution as there is a risk of burn injury.

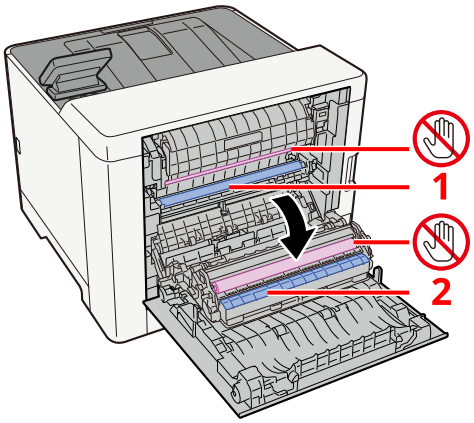

Wipe away the paper dust on paper 1 and dirt on paper 2 using a soft, dry cloth.

IMPORTANT

Be careful not to touch the part during cleaning. It may deteriorate the print quality.

Replacing the Toner Container

When toner is empty, the following message will be displayed. Replace the toner container.

"Toner [C][M][Y][K] is empty."

When toner runs low, the following message will be displayed. Make sure you have a new toner container available for replacement.

"Toner [C][M][Y][K] is low. (Replace when empty.)"

The number of sheets that can be printed with one toner container depends on the print data (how much toner is used). Compliant with JIS X 6932 (ISO/IEC 19798), when the EcoPrint mode is turned [Off], the average number of printable sheets of the toner container is as follows: (When printing with A4.)

Toner Color	Life of the Toner Container (Printable pages)
Black	4,100 images
Cyan	3,200 images
Magenta	3,200 images
Yellow	3,200 images

NOTE

- The average number of printable sheets of the toner container that comes with this machine is as follows:
- All colors: 1,500 images
- For the toner container, always use a genuine toner container. Using a toner container that is not genuine may cause image defects and product failure.
- The memory chip in the toner container of this product stores information necessary for improving customer convenience, operation of the recycling system for used toner containers, and planning and development of new products. The stored information does not include information that makes it possible to identify individuals, and is only used anonymously for the above purposes.

CAUTION

Do not attempt to incinerate parts which contain toner. Dangerous sparks may cause burns.

Installation procedures of the toner container is same for every color. Here, we'll explain the procedures for the yellow toner container, as an example.

1 Open the right cover.

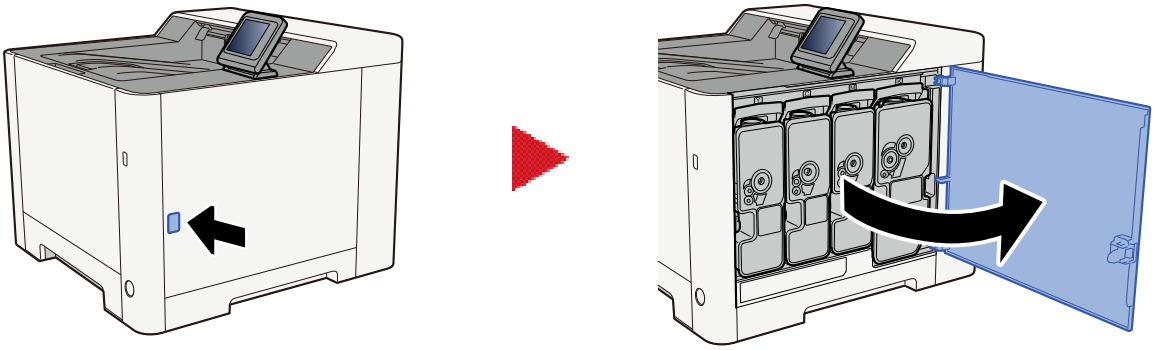

2 Unlock the toner container.

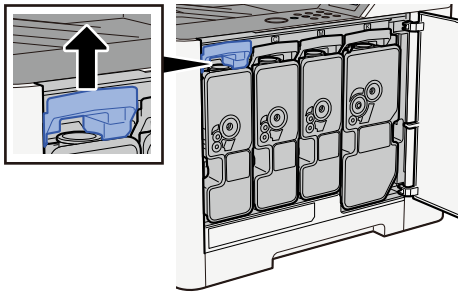

3 Put used toner container into the plastic waste bag.

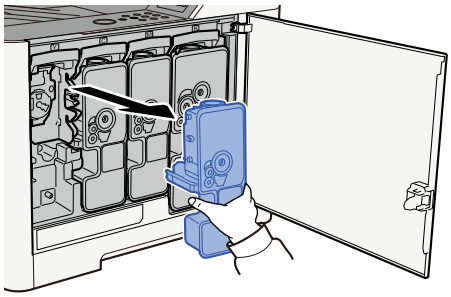

4 Remove the new toner container from the box.

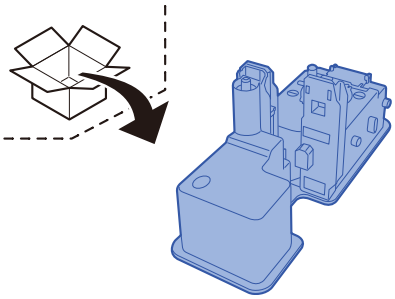

IMPORTANT

Do not touch the points shown below.

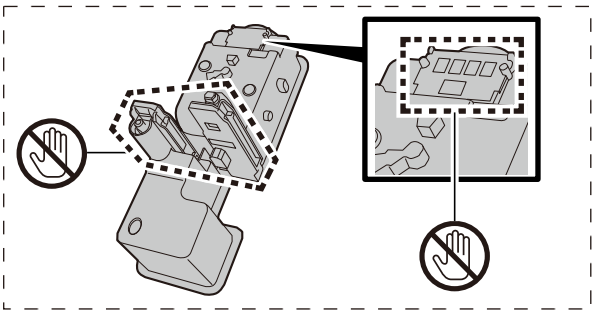

5 Shake the toner container.

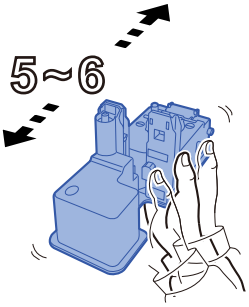

6 Install the toner container.

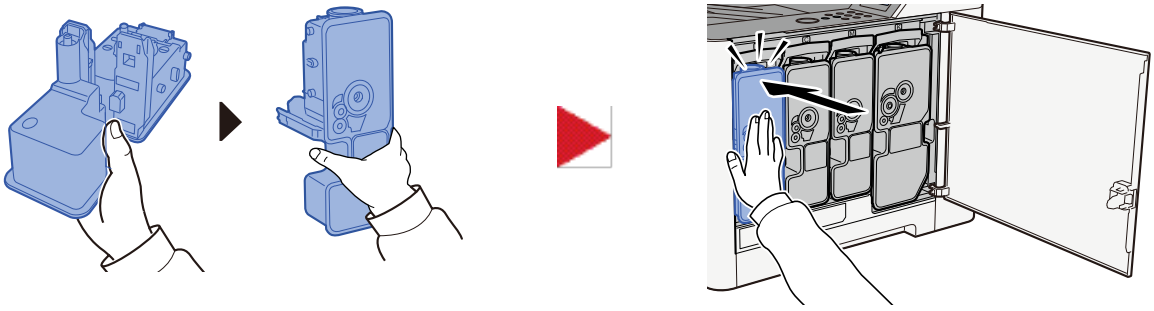

IMPORTANT

Insert the toner container all the way.

7 Close the right cover.

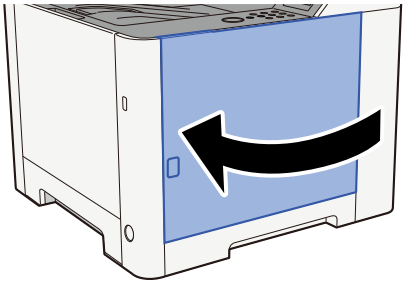

NOTE

- If the toner container cover or right cover does not close, check that the new toner container is installed correctly.
- Return the exhausted toner container to your dealer or service representative. The collected toner container will be recycled or disposed in accordance with the relevant regulations.

Troubleshooting

Solving Malfunctions

If a problem occurs with your machine, look into the checkpoints and perform procedures indicated on the following pages. The table below provides general guidelines for problem solving. If the problem persists, contact your service representative.

NOTE

When contacting us, the serial number will be necessary. To check the serial number, refer to the following:

➡ Checking the Equipment's Serial Number (page 2)

Machine Operation Trouble

The application does not start up

Is the auto panel reset setting time set too short?

Check the set time for auto panel reset.

1. **[Home] key > [...] > [System Menu] > [Device Settings] > [Energy Saver/Timer] > [Panel Reset Timer]**
2. **Set the panel reset time to 30 seconds or more**

   It can be set in the range of 5 to 495 seconds (in 5 second increments).

The screen does not respond when the power switch is turned on

Is the machine plugged in?

1 **Plug in the power cord that comes with this machine to an outlet.**

Make sure the power plug is securely plugged in.

Machine does not print even when [Start] is pressed

Is there a message displayed on the screen?

If a message is displayed on the screen, you may not be able to operate it depending on what is displayed. Determine the appropriate response to the message and respond accordingly.

Is the machine in Sleep mode?

Operation can't be done when it is in sleep mode.

1 **Press any key on the control panel**

NOTE

It is possible to return from sleep mode by touching the touch panel.

Paper often jams

Is the paper loaded correctly?

Load the paper correctly.

When loading paper in a cassette

1 **Pull the Cassette 1 completely out of the machine.**

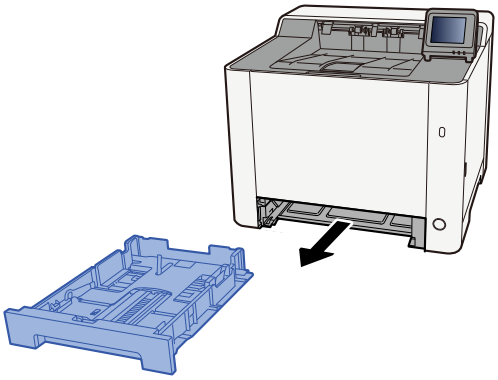

NOTE

When pulling the cassette out of the machine, ensure it is supported and does not fall out.

2 Adjust the cassette size.

1 Adjust the paper length guide to the paper size required. Press the paper length adjusting tab and slide the guides to the paper size required.

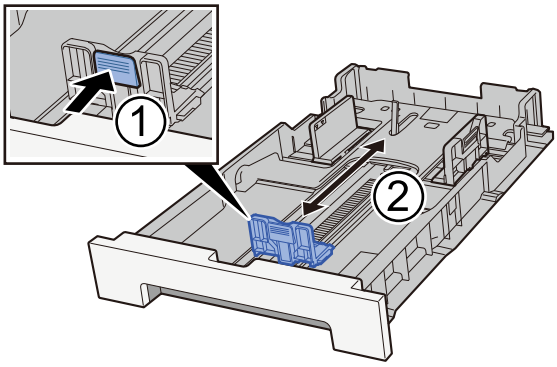

2 Adjust the paper length guides to the paper size required. Press the paper length adjusting tab and slide the guides to the paper size required. (Cassette 1 only)

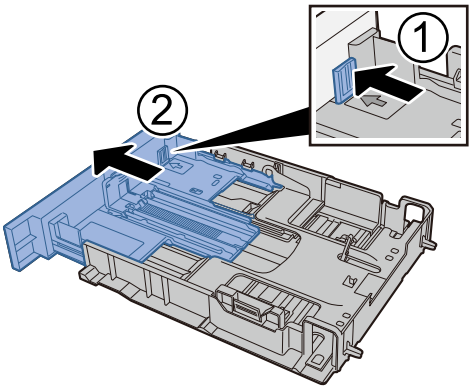

NOTE

It is necessary to set the paper size from the operation panel.

➡ Specifying Paper Size and Media Type (page 117)

3 Load paper.

1 Fan the paper, then tap it on a level surface to avoid paper jams or skewed printing.

2 Load the paper in the cassette.

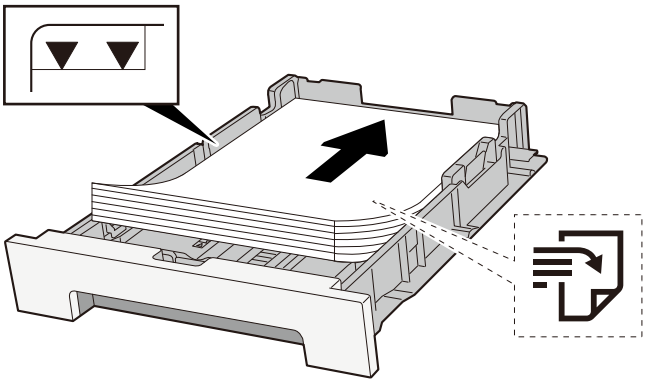

IMPORTANT

- Load the paper with the print side facing up.
- After removing new paper from its packaging, fan out the paper before loading it in the cassettes.

  ➡ Precaution for Loading Paper (page 108)
- Before loading the paper, be sure that it is not curled or folded. Paper that is curled or folded may cause paper jams.
- Ensure that the loaded paper does not exceed the level indicator (see illustration above).
- If paper is loaded without adjusting the paper length guide and paper width guide, the paper may skew or become jammed.

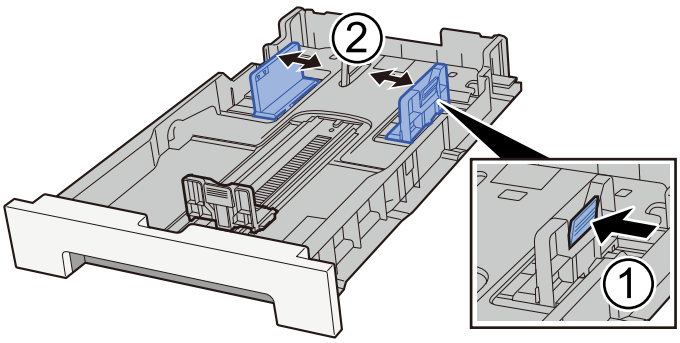

4 Gently push the Cassette 1 back in.

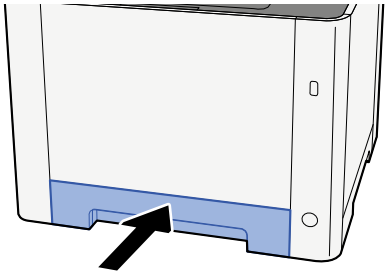

NOTE

When Folio, Oficio II or Legal is used, the cassette will extend out from the machine.

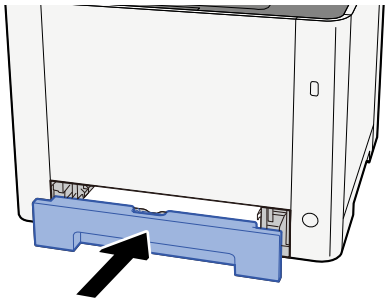

5 Display the screen.

[Home] key > [...] > [System Menu] > [Device Settings] > [Paper Feeding]

6 Configure the function

Select the paper size and paper type.

➡ [Cassette 1 Settings] to [Cassette 2 Settings] (page 205)

➡ [MP Tray Settings] (page 207)

When loading paper in the multipurpose tray

1 Open the multipurpose tray.

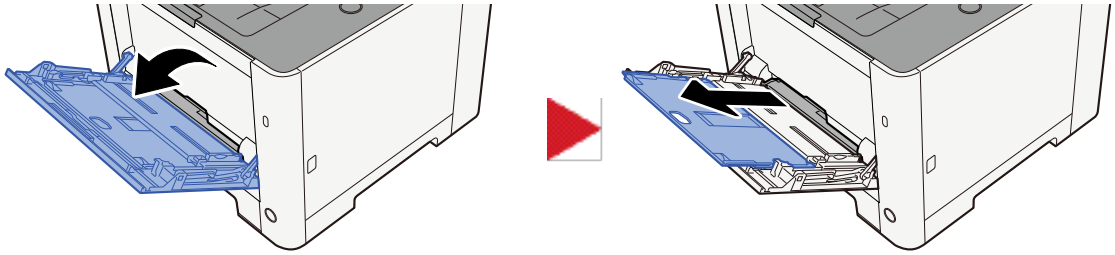

2 Adjust the multipurpose tray size.

Paper sizes are marked on the multipurpose tray.

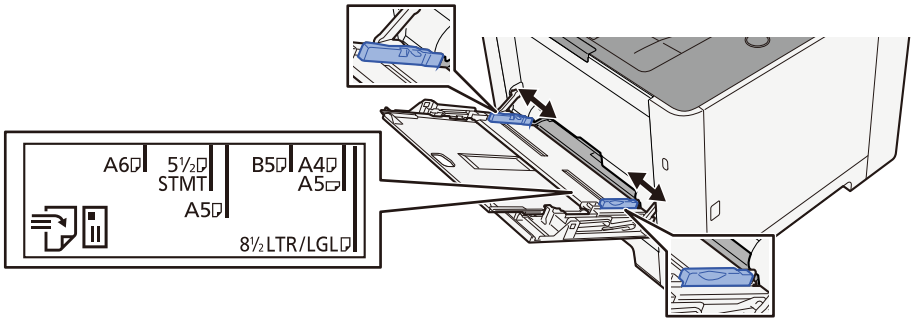

3 Load paper.

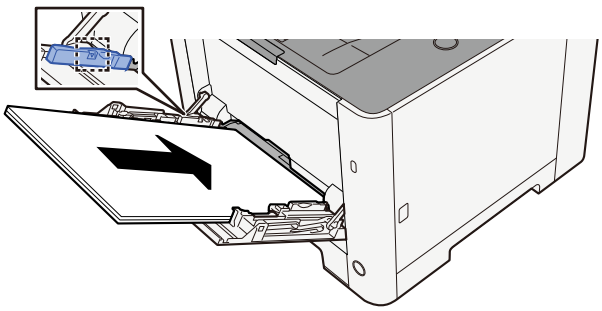

Insert the paper along the paper width guides into the tray until it stops.

After removing new paper from its packaging, fan the paper before loading it in the multipurpose tray.

➡ Precaution for Loading Paper (page 108)

IMPORTANT

- When loading the paper, keep the print side facing up.
- Curled paper must be uncurled before use.
- When loading paper into the multipurpose tray, check that there is no paper left over in the tray from a previous job before loading the paper. If there is just a small amount of paper left over in the multipurpose tray and you want to add more, first remove the left-over paper from the tray and include it with the new paper before loading the paper back into the tray.
- If there is a gap between the paper and the paper width guides, readjust the guides to fit the paper in order to prevent skewed feeding and paper jams.
- Ensure that the loaded paper does not exceed the load limits.

When you load envelopes or cardstock in the multipurpose tray, load the paper with the print side facing up. For the procedure for printing, refer to the Printer Driver User Guide.

➡ **Printer Driver User Guide**

Example: When printing the address.

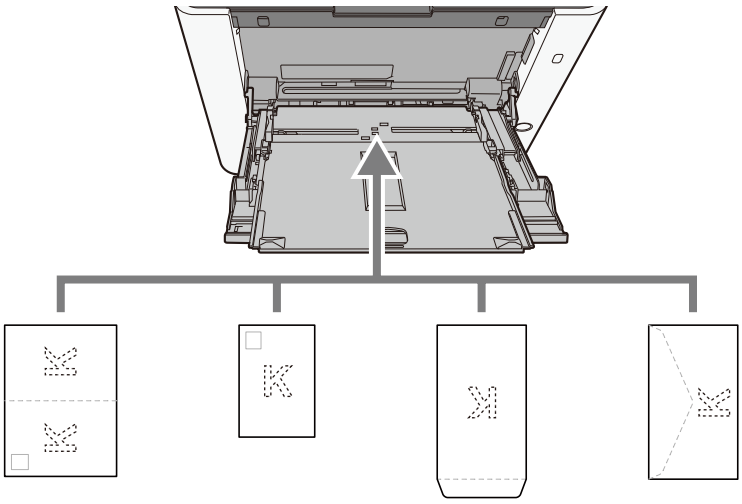

IMPORTANT

- Use unfolded Oufukuhagaki (Return postcard).
- How to load envelopes (orientation and facing) will differ depending on the type of envelope. Be sure to load it in correctly, otherwise printing may be done in the wrong direction or on the wrong face.

NOTE

When you load envelopes in the multipurpose tray, select the envelope type by referring to the following:

➡ [MP Tray Settings] (page 207)

4 Specify the type of paper loaded in the multipurpose tray using the operation panel.

➡ Specifying Paper Size and Media Type (page 117)

Is there a problem with the paper?

Remove the paper from the multipurpose tray once and change the loading direction by rotating the paper 180 degrees.

➡ Precaution for Loading Paper (page 108)

Is the paper of the supported type? Is it in good condition?

Remove the paper from the cassette, turn it over, and then reload it.

➡ Precaution for Loading Paper (page 108)

Is the paper curled, folded or wrinkled?

Replace the paper with new paper.

➡ Precaution for Loading Paper (page 108)

Are there any loose scraps or jammed paper in the machine?

Remove the jammed paper.

➡ Clearing Paper Jams (page 427)

Two or more sheets are overlaps when ejected (multi feeding)

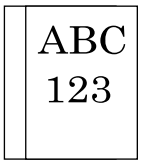

Is the paper loaded correctly?

Load the paper correctly.

When loading paper in a cassette

1 **Pull the Cassette 1 completely out of the machine.**

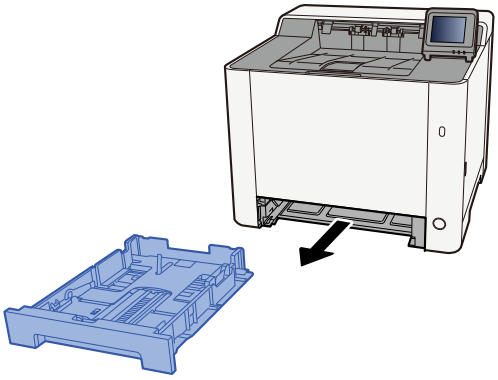

NOTE

When pulling the cassette out of the machine, ensure it is supported and does not fall out.

2 Adjust the cassette size.

1 Adjust the paper length guide to the paper size required. Press the paper length adjusting tab and slide the guides to the paper size required.

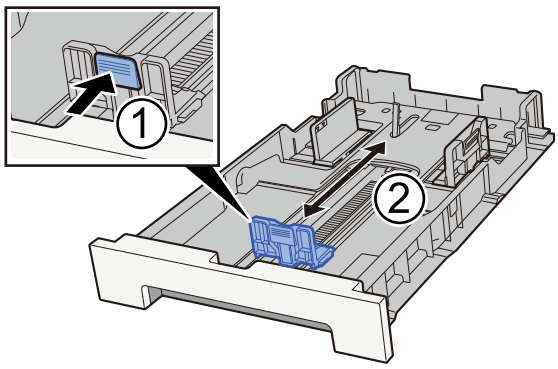

2 Adjust the paper length guides to the paper size required. Press the paper length adjusting tab and slide the guides to the paper size required. (Cassette 1 only)

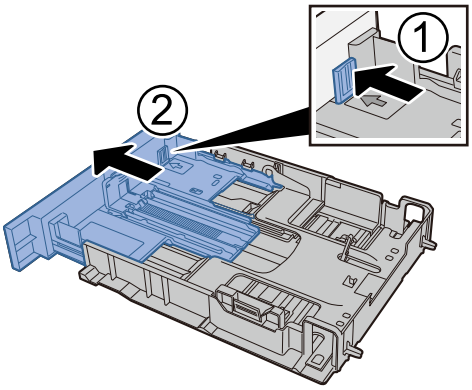

NOTE

It is necessary to set the paper size from the operation panel.

➡ Specifying Paper Size and Media Type (page 117)

3 Load paper.

1 Fan the paper, then tap it on a level surface to avoid paper jams or skewed printing.

2 Load the paper in the cassette.

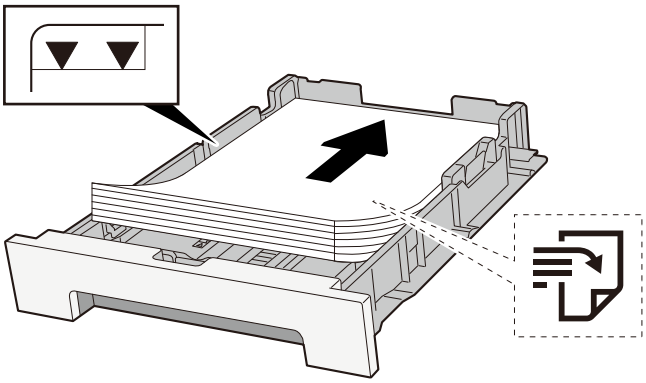

IMPORTANT

- Load the paper with the print side facing up.
- After removing new paper from its packaging, fan out the paper before loading it in the cassettes.

  ➡ Precaution for Loading Paper (page 108)
- Before loading the paper, be sure that it is not curled or folded. Paper that is curled or folded may cause paper jams.
- Ensure that the loaded paper does not exceed the level indicator (see illustration above).
- If paper is loaded without adjusting the paper length guide and paper width guide, the paper may skew or become jammed.

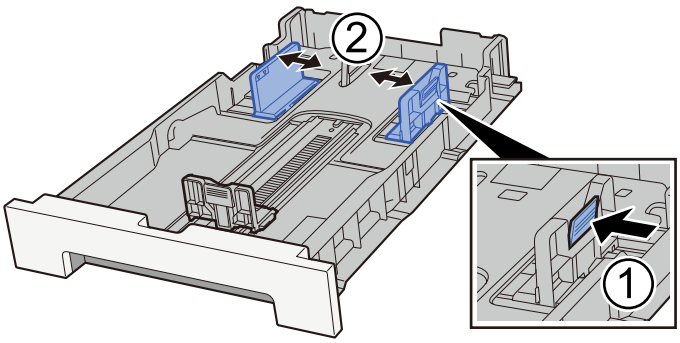

4 Gently push the Cassette 1 back in.

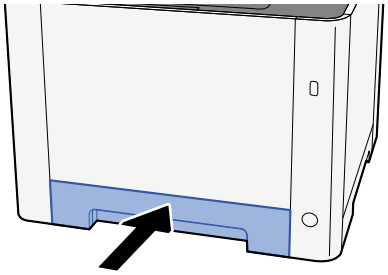

NOTE

When Folio, Oficio II or Legal is used, the cassette will extend out from the machine.

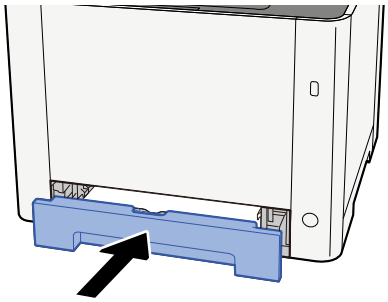

5 Display the screen.

[Home] key > [...] > [System Menu] > [Device Settings] > [Paper Feeding]

6 Configure the function

Select the paper size and paper type.

➡ [Cassette 1 Settings] to [Cassette 2 Settings] (page 205)

➡ [MP Tray Settings] (page 207)

When loading paper in the multipurpose tray

1 Open the multipurpose tray.

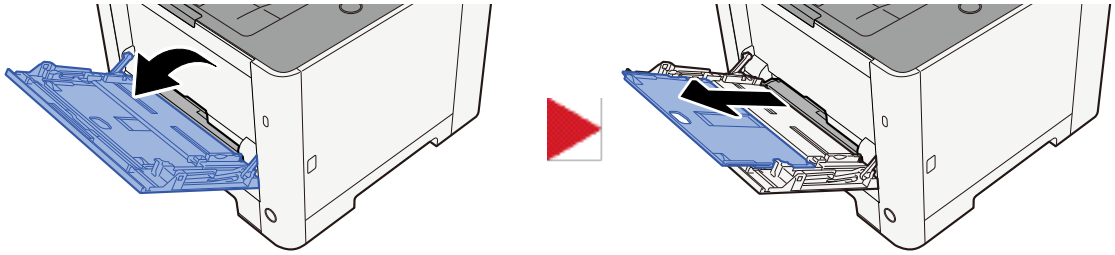

2 Adjust the multipurpose tray size.

Paper sizes are marked on the multipurpose tray.

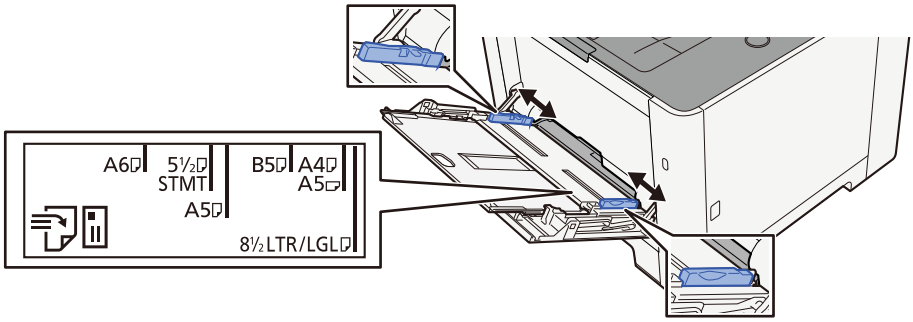

3 Load paper.

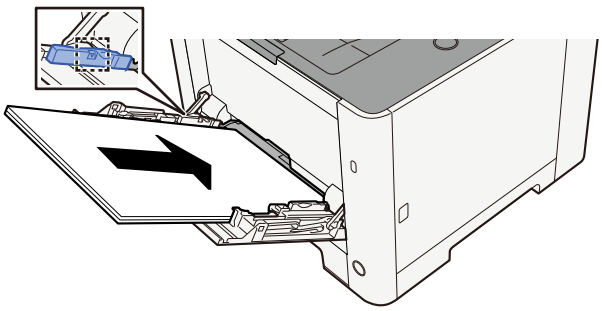

Insert the paper along the paper width guides into the tray until it stops.

After removing new paper from its packaging, fan the paper before loading it in the multipurpose tray.

➡ Precaution for Loading Paper (page 108)

IMPORTANT

- When loading the paper, keep the print side facing up.
- Curled paper must be uncurled before use.
- When loading paper into the multipurpose tray, check that there is no paper left over in the tray from a previous job before loading the paper. If there is just a small amount of paper left over in the multipurpose tray and you want to add more, first remove the left-over paper from the tray and include it with the new paper before loading the paper back into the tray.
- If there is a gap between the paper and the paper width guides, readjust the guides to fit the paper in order to prevent skewed feeding and paper jams.
- Ensure that the loaded paper does not exceed the load limits.

When you load envelopes or cardstock in the multipurpose tray, load the paper with the print side facing up. For the procedure for printing, refer to the Printer Driver User Guide.

➡ **Printer Driver User Guide**

Example: When printing the address.

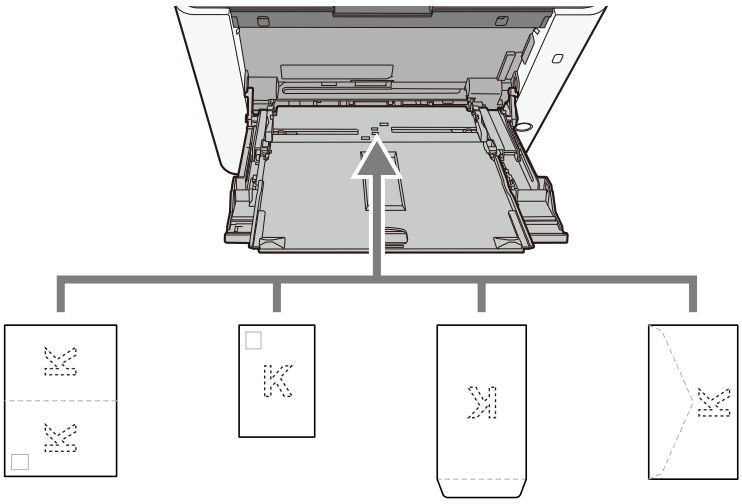

IMPORTANT

- Use unfolded Oufukuhagaki (Return postcard).
- How to load envelopes (orientation and facing) will differ depending on the type of envelope. Be sure to load it in correctly, otherwise printing may be done in the wrong direction or on the wrong face.

NOTE

When you load envelopes in the multipurpose tray, select the envelope type by referring to the following:

➡ [MP Tray Settings] (page 207)

4 Specify the type of paper loaded in the multipurpose tray using the operation panel.

➡ Specifying Paper Size and Media Type (page 117)

Printouts are wrinkled

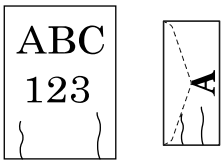

Is the paper loaded correctly?

Load the paper correctly.

When loading paper in a cassette

1 **Pull the Cassette 1 completely out of the machine.**

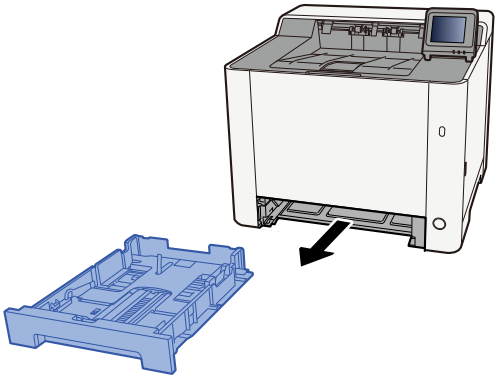

NOTE

When pulling the cassette out of the machine, ensure it is supported and does not fall out.

2 Adjust the cassette size.

1 Adjust the paper length guide to the paper size required. Press the paper length adjusting tab and slide the guides to the paper size required.

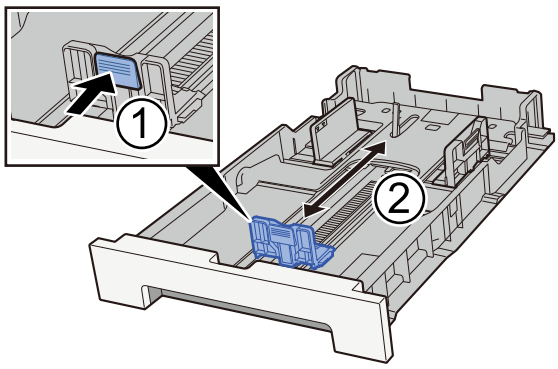

2 Adjust the paper length guides to the paper size required. Press the paper length adjusting tab and slide the guides to the paper size required. (Cassette 1 only)

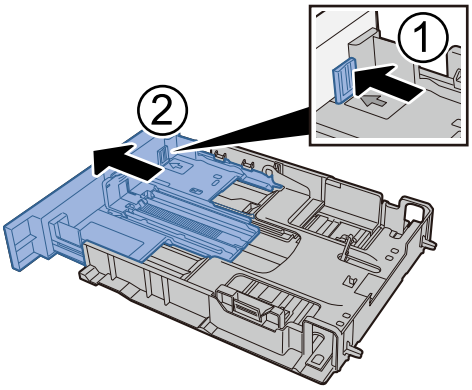

NOTE

It is necessary to set the paper size from the operation panel.

➡ Specifying Paper Size and Media Type (page 117)

3 Load paper.

1 Fan the paper, then tap it on a level surface to avoid paper jams or skewed printing.

2 Load the paper in the cassette.

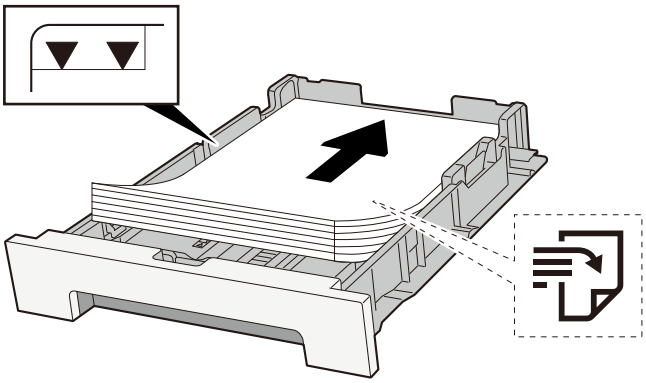

IMPORTANT

- Load the paper with the print side facing up.
- After removing new paper from its packaging, fan out the paper before loading it in the cassettes.

  ➡ Precaution for Loading Paper (page 108)
- Before loading the paper, be sure that it is not curled or folded. Paper that is curled or folded may cause paper jams.
- Ensure that the loaded paper does not exceed the level indicator (see illustration above).
- If paper is loaded without adjusting the paper length guide and paper width guide, the paper may skew or become jammed.

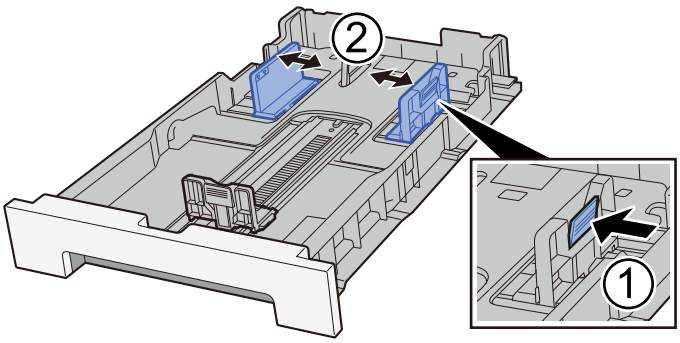

4 Gently push the Cassette 1 back in.

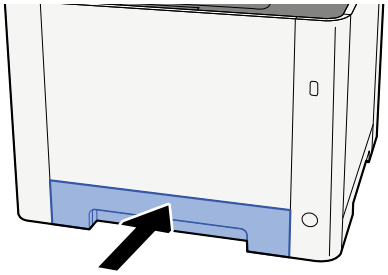

NOTE

When Folio, Oficio II or Legal is used, the cassette will extend out from the machine.

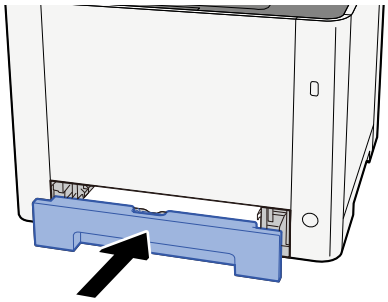

5 Display the screen.

[Home] key > [...] > [System Menu] > [Device Settings] > [Paper Feeding]

6 Configure the function

Select the paper size and paper type.

➡ [Cassette 1 Settings] to [Cassette 2 Settings] (page 205)

➡ [MP Tray Settings] (page 207)

When loading paper in the multipurpose tray

1 Open the multipurpose tray.

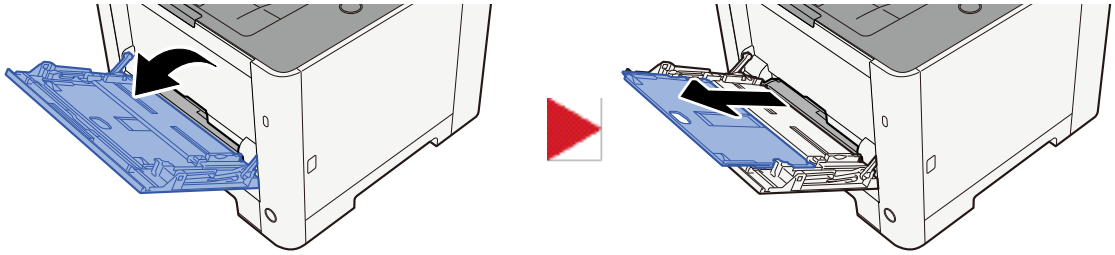

2 Adjust the multipurpose tray size.

Paper sizes are marked on the multipurpose tray.

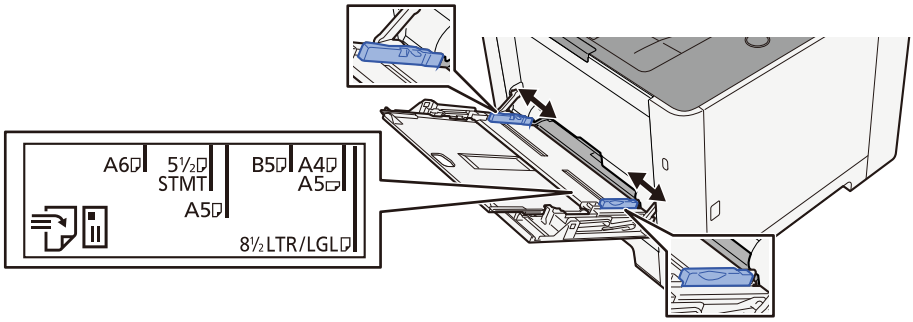

3 Load paper.

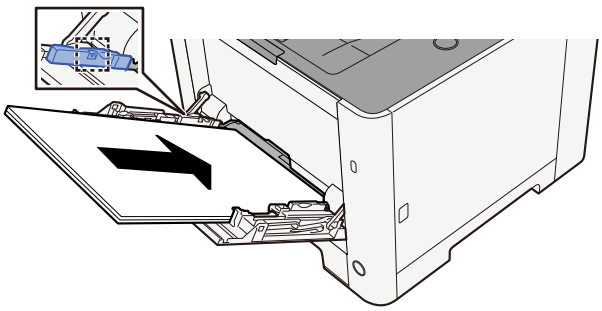

Insert the paper along the paper width guides into the tray until it stops.

After removing new paper from its packaging, fan the paper before loading it in the multipurpose tray.

➡ Precaution for Loading Paper (page 108)

IMPORTANT

- When loading the paper, keep the print side facing up.
- Curled paper must be uncurled before use.
- When loading paper into the multipurpose tray, check that there is no paper left over in the tray from a previous job before loading the paper. If there is just a small amount of paper left over in the multipurpose tray and you want to add more, first remove the left-over paper from the tray and include it with the new paper before loading the paper back into the tray.
- If there is a gap between the paper and the paper width guides, readjust the guides to fit the paper in order to prevent skewed feeding and paper jams.
- Ensure that the loaded paper does not exceed the load limits.

When you load envelopes or cardstock in the multipurpose tray, load the paper with the print side facing up. For the procedure for printing, refer to the Printer Driver User Guide.

➡ **Printer Driver User Guide**

Example: When printing the address.

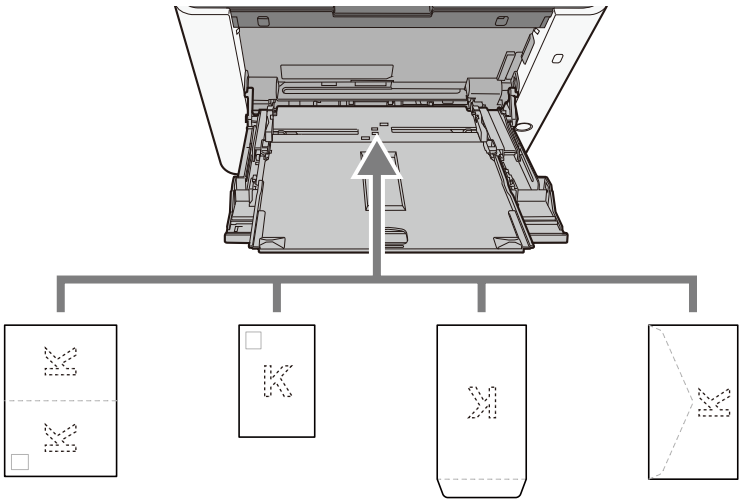

IMPORTANT

- Use unfolded Oufukuhagaki (Return postcard).
- How to load envelopes (orientation and facing) will differ depending on the type of envelope. Be sure to load it in correctly, otherwise printing may be done in the wrong direction or on the wrong face.

NOTE

When you load envelopes in the multipurpose tray, select the envelope type by referring to the following:

➡ [MP Tray Settings] (page 207)

4 Specify the type of paper loaded in the multipurpose tray using the operation panel.

➡ Specifying Paper Size and Media Type (page 117)

Remove the paper from the cassette once and change the loading direction by rotating the paper 180 degrees.

➡ Precaution for Loading Paper (page 108)

Is the paper damp?

Replace the paper with new paper.

➡ Precaution for Loading Paper (page 108)

Printouts are curled

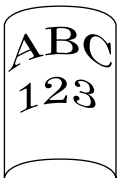

Is the paper loaded correctly?

Load the paper correctly.

When loading paper in a cassette

1 Pull the Cassette 1 completely out of the machine.

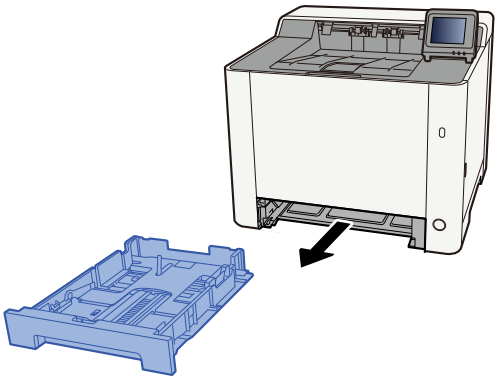

NOTE

When pulling the cassette out of the machine, ensure it is supported and does not fall out.

2 Adjust the cassette size.

1 Adjust the position of the paper width guides located on the left and right sides of the cassette. Press the paper width adjusting tab and slide the guides to the paper size required. Paper sizes are marked on the cassette.

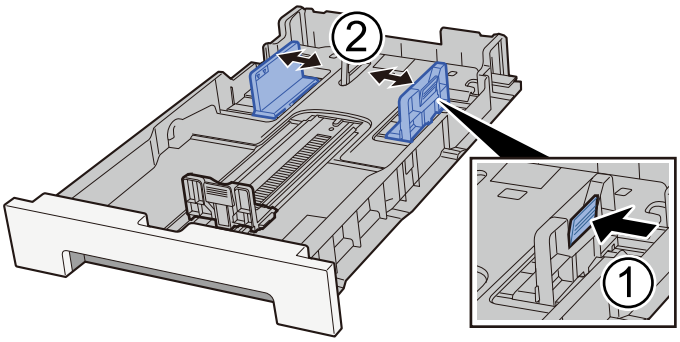

2 Adjust the paper length guide to the paper size required. Press the paper length adjusting tab and slide the guides to the paper size required.

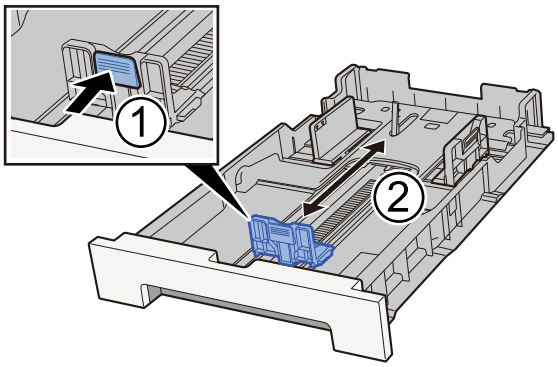

NOTE

It is necessary to set the paper size from the operation panel.

Specifying Paper Size and Media Type

3 Load paper.

1 Fan the paper, then tap it on a level surface to avoid paper jams or skewed printing.

2 Load the paper in the cassette.

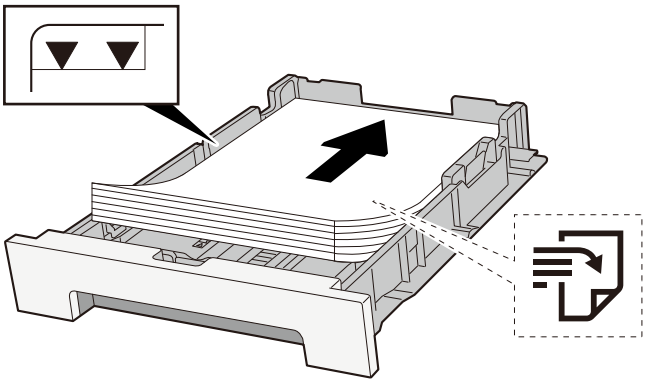

IMPORTANT

- Load the paper with the print side facing up.
- After removing new paper from its packaging, fan out the paper before loading it in the cassettes.

  ➡ Precaution for Loading Paper (page 108)
- Before loading the paper, be sure that it is not curled or folded. Paper that is curled or folded may cause paper jams.
- Ensure that the loaded paper does not exceed the level indicator (see illustration above).
- If paper is loaded without adjusting the paper length guide and paper width guide, the paper may skew or become jammed.

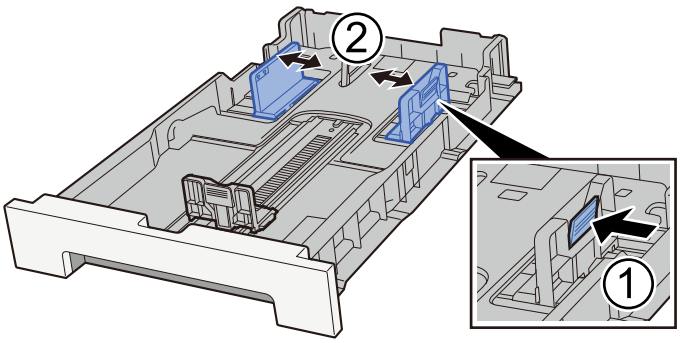

4 Gently push the Cassette 1 back in.

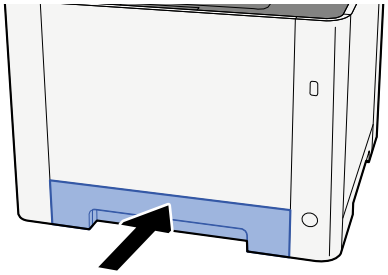

NOTE

When Folio, Oficio II or Legal is used, the cassette will extend out from the machine.

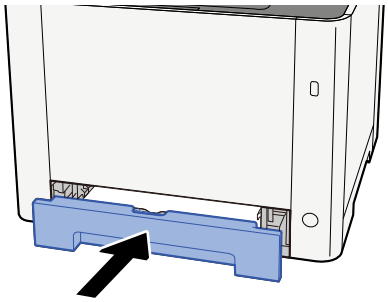

When loading paper in the multipurpose tray

1 Open the multipurpose tray.

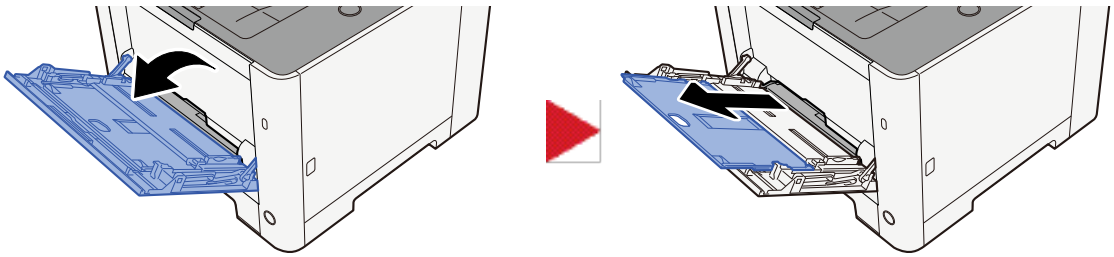

2 Adjust the multipurpose tray size.

Paper sizes are marked on the multipurpose tray.

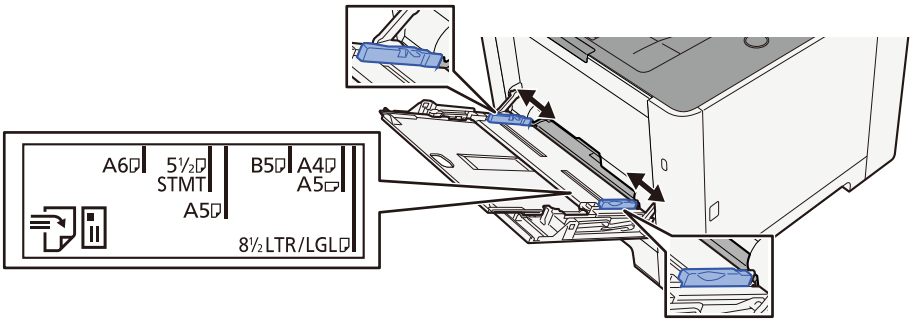

3 Load paper.

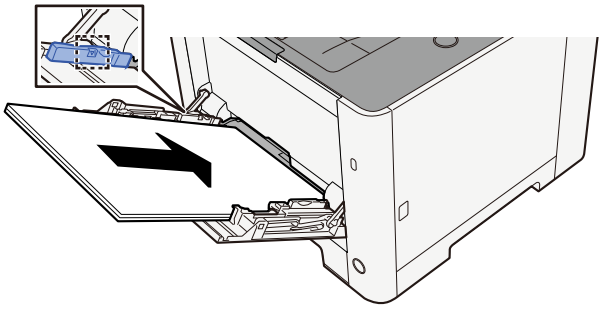

Insert the paper along the paper width guides into the tray until it stops.

After removing new paper from its packaging, fan the paper before loading it in the multipurpose tray.

➡ Precaution for Loading Paper (page 108)

IMPORTANT

- When loading the paper, keep the print side facing up.
- Curled paper must be uncurled before use.
- When loading paper into the multipurpose tray, check that there is no paper left over in the tray from a previous job before loading the paper. If there is just a small amount of paper left over in the multipurpose tray and you want to add more, first remove the left-over paper from the tray and include it with the new paper before loading the paper back into the tray.
- If there is a gap between the paper and the paper width guides, readjust the guides to fit the paper in order to prevent skewed feeding and paper jams.
- Ensure that the loaded paper does not exceed the load limits.

When you load envelopes or cardstock in the multipurpose tray, load the paper with the print side facing up. For the procedure for printing, refer to the Printer Driver User Guide.

➡ **Printer Driver User Guide**

Example: When printing the address.

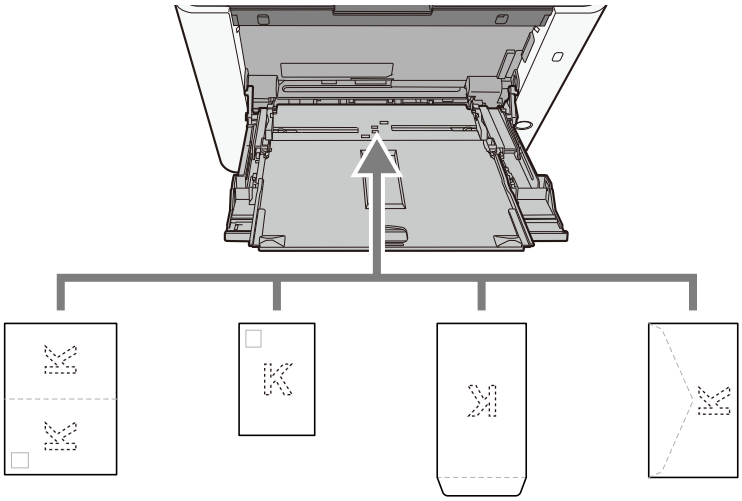

IMPORTANT

- Use unfolded Oufukuhagaki (Return postcard).
- How to load envelopes (orientation and facing) will differ depending on the type of envelope. Be sure to load it in correctly, otherwise printing may be done in the wrong direction or on the wrong face.

NOTE

When you load envelopes in the multipurpose tray, select the envelope type by referring to the following:

➡ [MP Tray Settings] (page 207)

4 Specify the type of paper loaded in the multipurpose tray using the operation panel.

➡ Specifying Paper Size and Media Type (page 117)

Remove the paper from the cassette once and reload the paper upside-down or change the loading direction by rotating the paper 180 degrees.

➡ Precaution for Loading Paper (page 108)

Is the paper damp?

Replace the paper with new paper.

Printer driver cannot be installed

Is the driver installed with the host name while Wi-Fi or Wi-Fi Direct function is available?

Specify the IP address instead of the host name.

➡ Installing Software (page 78)

Is Level 3 selected in Security Quick Setup?

1. **Acquire a root certificate for SSL communication from a trusted root certification authority. In Command Center RX, click [Security Settings] > [Certificates], and register the root certificate in [Root Certificate 1] to [Root Certificate 5].**
2. **After installing the certificate, restart the PC.**
3. **In Command Center RX, click [Network Settings] > [Protocols], and in [Other Protocols], set "SNMPv3" to [On].**
4. **In Command Center RX, click [Management Settings] > [SNMP], and set "SNMPv3".**
5. **Access the [Control Panel], then select [Devices and Printers], [Add a printer], and [The printer that I want isn't listed].**
6. **Check [Select a shared printer by name], and enter the address of the printer.**

   E.g.: https://hostname:443/printers/lp1
7. **Select the desired printer and specify the printer driver.**

Cannot start printing

Is the machine plugged in?

Plug the power cord into an AC outlet.

Is the power turned on?

Turn the power switch on.

1 **Turn the power switch on.**

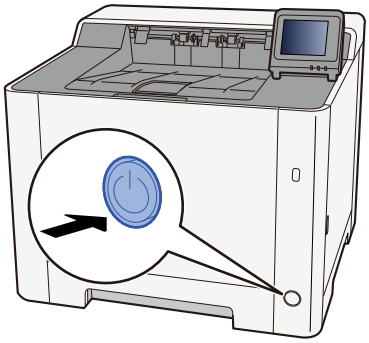

IMPORTANT

When turning off the power switch, do not turn on the power switch again immediately. Wait more than 5 seconds, and then turn on the power switch.

Are the USB cable and network cable connected?

Make sure to connect the USB cable and network cable securely.

Connect the network cable

IMPORTANT

If the power is on, turn the power switch off.

➡ Power off (page 45)

1 Connect the cable to the machine.

1 Connect the LAN cable to the network interface connector.

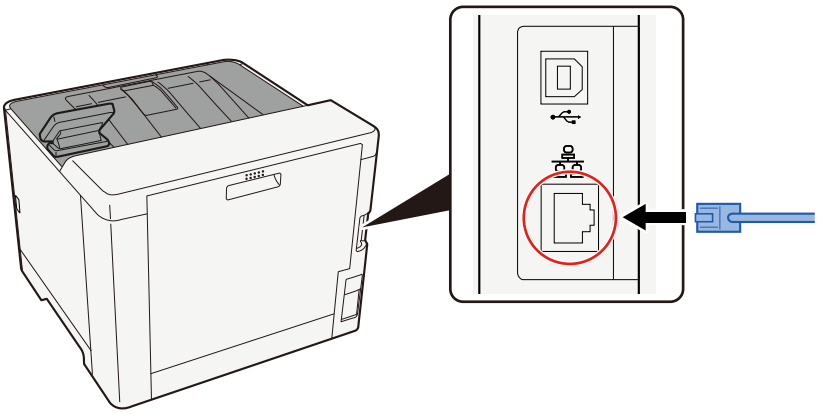

2 Connect the other end of the cable to the hub.

2 Power on the machine and configure the network.

➡ Network Setup (page 60)

Connect a USB cable to the machine.

IMPORTANT

If the power is on, turn the power switch off.

➡ Power off (page 45)

1 Connect the cable to the machine.

1 Connect the USB cable to the USB interface connector.

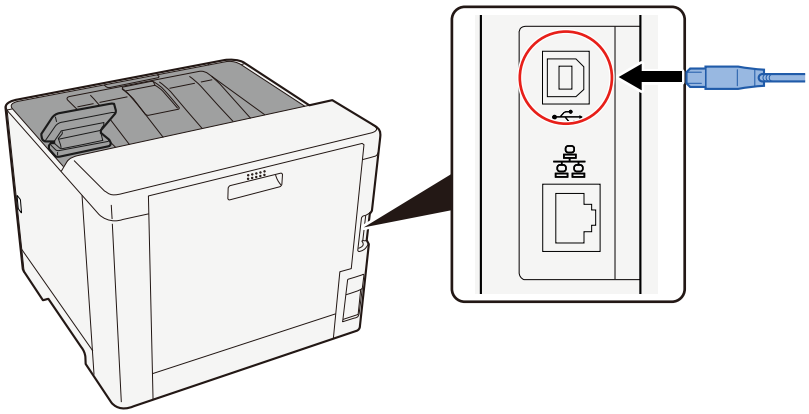

2 Connect the other end of the cable to the PC.

2 Power on the machine.

Are there a mixture of inaccessible addresses?

If you have configured wired and Wi-Fi networks with name resolution, you may have a mix of IP addresses (private addresses) on the other inaccessible network.

IMPORTANT

Only one host name and one domain name can be used on this machine. Please consider this limitation when setting the network operation.

1 [Home] key > [...] > [System Menu] > [Network Settings] > [Primary Network (Client)]

Select Wi-Fi, Wired or Optional Network as the network to use without restrictions.

Primary Network

2 [Home] key > [...] > [System Menu] > [Network Settings] > [ProtocolSettings]

Please [Enable] either [Wired Network] or [Wi-Fi] and [Disable] the other.

Protocol Settings

3 In Command Center RX, change the settings for name resolution of NetBEUI, DNS, etc., or change the network environment settings.

➡ **Command Center RX User Guide**

Cannot print with USB drive / Does not recognize USB drive

Is the USB drive connected to the machine firmly?

Connect the USB drive firmly to the machine.

Are USB host settings set to [Block]?

1 **Change the USB host setting to [Unblock]**

[Home] key > [...] > [System Menu] > [Security Settings] > [Interface Block Setting]

Is the USB drive broken?

Use another USB drive.

While [Auto-IP] is already set to [On], the IP address is not assigned automatically

Is a value other than "0.0.0.0" entered for the link local address of TCP/IP(v4)?

1 Enter "0.0.0.0" in IP Address of TCP/IP(v4).

1. [Home] key > [...] > [System Menu] > [Network Settings] > [Wired Network Settings] > [IPv4 Settings]
2. Enter "0.0.0.0" in IP Address.

➡ TCP/IP (IPv4) setting (page 60)

The machine is emitting steam in the area around the paper ejection slot

Is the temperature in the room where the machine is running low? Or was damp paper used?

Depending on the machine's printing environment and the condition of the paper, the moist contained in the paper may evaporate due to the heat generated during printing, and the water vapor emitted may look like smoke.

There is no problem, and you can continue printing. If the steam concerns you, raise the room temperature or replace the paper with a new dryer paper.

Printed Image Trouble

Printouts are totally too light

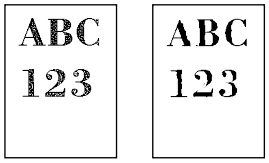

Is the paper damp?

Replace the paper with new paper.

Is the media type set correctly?

Check if the media type setting is correct.

1 **[Home] key > [...] > [System Menu] > [Device Settings] > [Paper Feeding] > [Media Type Setting]**

2 **Check the weight (paper thickness) for the paper type and change it to the correct value**

➡ Media Type Setting (page 210)

Have you set EcoPrint?

Set [EcoPrint] to [Off].

1 **[Home] key > [...] > [Function Settings] > [Printer]**

2 **[EcoPrint] > [Off]**

Color adjustment needs to be performed.

1 **Display the screen.**

1 [Home] key > [...] > [System Menu] > [Adjustment/Maintenance] > [Image Adjustment]

2 **Perform the color adjustment.**

1 Select [ColorCalibration], and then select [Start].

Color adjustment begins.

Developer refresh needs to be performed.

1 Display the screen.

1 [Home] key > [...] > [System Menu] > [Adjustment/Maintenance] > [Image Adjustment]

2 Perform the Developer Refresh.

1 Select [Developer Refresh], then select [Start].

Developer Refresh begins.

NOTE

Waiting time may be longer when the toner is refilled during developer refresh.

Laser scanner cleaning needs to be performed.

1 Display the screen.

1 [Home] key > [...] > [System Menu] > [Adjustment/Maintenance] > [Altitude Adjustment]

2 Perform the Laser Scanner Cleaning.

1 Select [Laser Scanner Cleaning], then select [Start].

Laser Scanner Cleaning begins.

Printed images are fuzzy or cut off

Are you using the machine in a place with high humidity or drastic temperature and humidity fluctuations?

Use the machine in an environment with appropriate humidity.

Drum refresh needs to be performed.

1 Display the screen.

1. [Home] key > [...] > [System Menu] > [Adjustment/Maintenance] > [Image Adjustment]

2 Perform the Drum Refresh.

1. Select [Drum Refresh], then select [Start].

   Drum Refresh begins.

Printed images are shifted

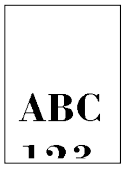

Is the paper loaded correctly?

Adjust the paper length guide and width guide of the cassette to fit the paper size.

➡ Loading in the Cassettes (page 110)

The altitude is 1000 m or higher and irregular horizontal white lines appear in the image.

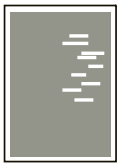

1 **Select the [Home] key > [...] > [System Menu] > [Adjustment/Maintenance] > [Altitude Adjustment] and set to an elevation one level higher than the current setting.**

The altitude is 1000 m or higher and dots appear in the image.

1 **Select the [Home] key > [...] > [System Menu] > [Adjustment/Maintenance] > [Altitude Adjustment] and set to an elevation one level higher than the current setting.**

Printed images have vertical lines

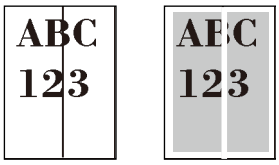

Laser scanner cleaning needs to be performed.

1 Display the screen.

1 [Home] key > [...] > [System Menu] > [Adjustment/Maintenance] > [Altitude Adjustment]

2 Perform the Laser Scanner Cleaning.

1 Select [Laser Scanner Cleaning], then select [Start].

Laser Scanner Cleaning begins.

Dirt on the top edge or back of the paper

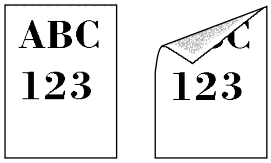

Is the inside of the machine dirty?

Open the Rear Cover 1, and if the inside of the Machine is dirty with toner or the like, wipe it off with a soft, dry cloth.

Part of the image is periodically faint or shows white lines

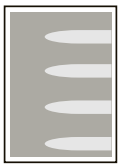

Is the Rear Cover 1 tightly closed?

Open the Rear Cover 1 and close it again.

Drum refresh needs to be performed.

1 Display the screen.

1 [Home] key > [...] > [System Menu] > [Adjustment/Maintenance] > [Image Adjustment]

2 Perform the Drum Refresh.

1 Select [Drum Refresh], then select [Start].

Drum Refresh begins.

Developer refresh needs to be performed.

1 Display the screen.

1 [Home] key > [...] > [System Menu] > [Adjustment/Maintenance] > [Image Adjustment]

2 Perform the Developer Refresh.

1 Select [Developer Refresh], then select [Start].

Developer Refresh begins.

NOTE

Waiting time may be longer when the toner is refilled during developer refresh.

A lighter version of the previous image remains and is repeatedly printed

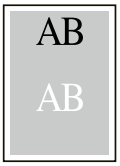

1 **If white dots appear in the improved image, decrease the value by one level.**

2 **If the white background of the improved image appears colored, proceed to the next step. If there is no unnecessary coloring, finish editing.**

3 **Configure the settings for MC.**

1. [Home] key [...] > [System Menu] > [Adjustment/Maintenance] > [MC]

   Increase the value one level from the current value.

2. [Home] key > [...] > [System Menu] > [Adjustment/Maintenance]

   Perform only calibration.

3. Print the document and confirm the image quality.

   Increase the value until the image is improved.

NOTE

If there is still no improvement, return the setting to the original value.

4 **If white dots or color dots appear in the improved image, decrease the value by one level.**

Color Printing Trouble

Color drift occur

Color adjustment needs to be performed.

1 Display the screen.

1 [Home] key > [...] > [System Menu] > [Adjustment/Maintenance] > [Image Adjustment]

2 Perform the color adjustment.

1 Select [ColorCalibration], and then select [Start].

Color adjustment begins.

Color registration (standard correction) needs to be performed.

If standard registration does not resolve the problem or to perform more detailed settings, use the detailed registration.

IMPORTANT

Before performing color registration, be sure to perform Color Adjustment. If color drift remains, perform color registration. By performing color registration without performing Color Adjustment, the color drift will be resolved once, however, it may cause the serious color drift later.

See the table below regarding Color Adjustment.

➡ Color Adjustment (page 421)

1 Load paper.

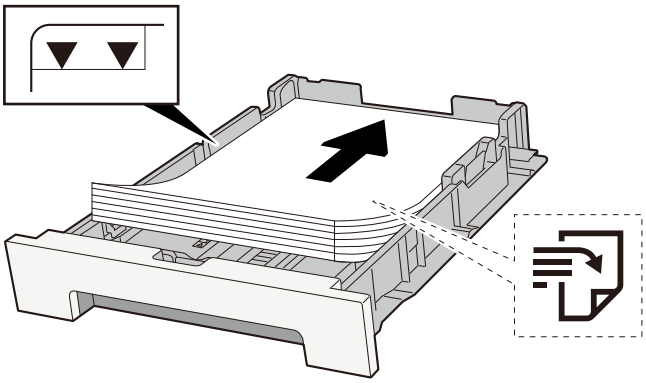

IMPORTANT

- Load the paper with the print side facing up.
- After removing new paper from its packaging, fan out the paper before loading it in the cassettes.

  ➡ Precaution for Loading Paper (page 108)
- Before loading the paper, be sure that it is not curled or folded. Paper that is curled or folded may cause paper jams.
- Ensure that the loaded paper does not exceed the level indicator (see illustration above).
- If paper is loaded without adjusting the paper length guide and paper width guide, the paper may skew or become jammed.

2 Display the screen.

[Home] key > [...] > [System Menu] > [Adjustment/Maintenance] > [Color Registration - Normal]

3 Print the chart.

Select [Print Chart]

A chart is printed. Three types of charts are printed on a single sheet of paper for the three colors M (Magenta), C (Cyan), and Y (Yellow): H-L (Left), V (Center), and H-R (Right).

After printing, return to the Color Printing Position Correction Standard menu.

Chart Example

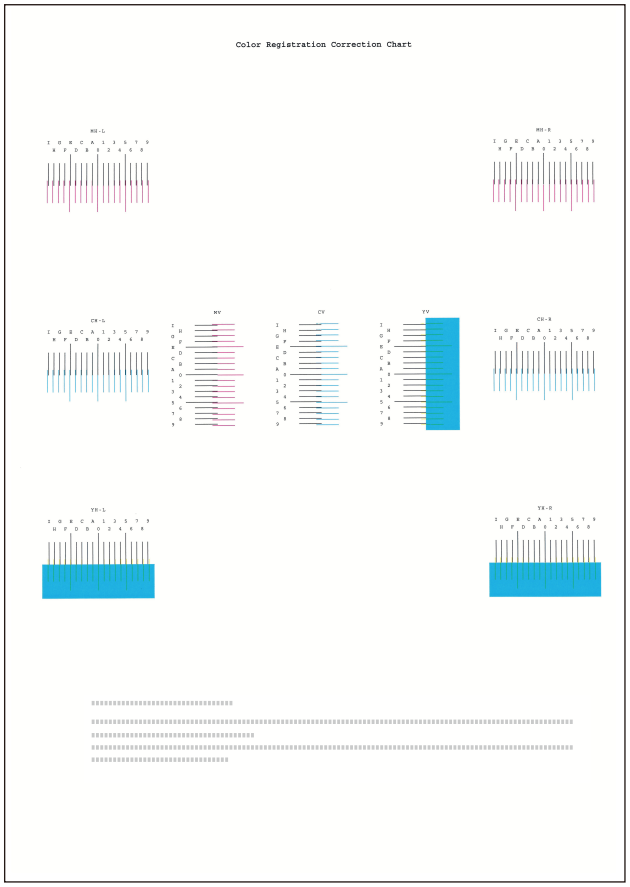

4 Displays the Correction menu.

Select [Registration]

The Magenta Correction menu is displayed.

5 Enter the appropriate value.

1 Find the location on each chart where 2 lines most closely match. If this is the 0 position, registration for that color is not required. For the illustration, B is the appropriate value.

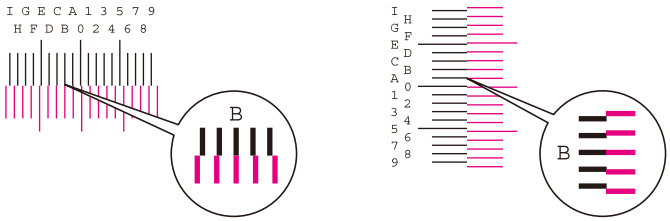

2 Select [▲] or the [▼] key and change items H-L, V and H-R, select [◀] or the [▶] key, input values loaded from the chart, and select the [Start] key.

Correct the Magenta, and after a short while, return to the Color Printing Position Correction Standard menu.

Select the [▲] key to advance the value from 0 to 9. Select the [▼] key to go in the opposite direction.

Select the [▼] key to change the value from 0 to the alphabet and from A to I. Select the [▲] key to go in the opposite direction.

It is not possible to enter values with the numeric keypad.

3 Repeat steps 1-2 to correct Cyan and Yellow.

Color registration (detailed correction) needs to be performed.

1 Load paper.

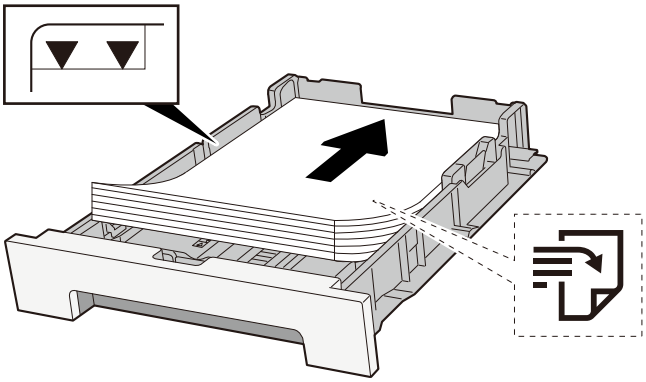

2 Display the screen.

[Home] key > [...] > [System Menu] > [Adjustment/Maintenance] > [Color Registration - Manual]

3 Print the chart.

Select [Print Chart]

A chart is printed. On the chart, for each of M (magenta), C (cyan) and Y (yellow), charts for H-1 to 5 and V-1 to 5 are printed.

After printing, return to the Color Printing Position Correction Details menu.

Chart Example

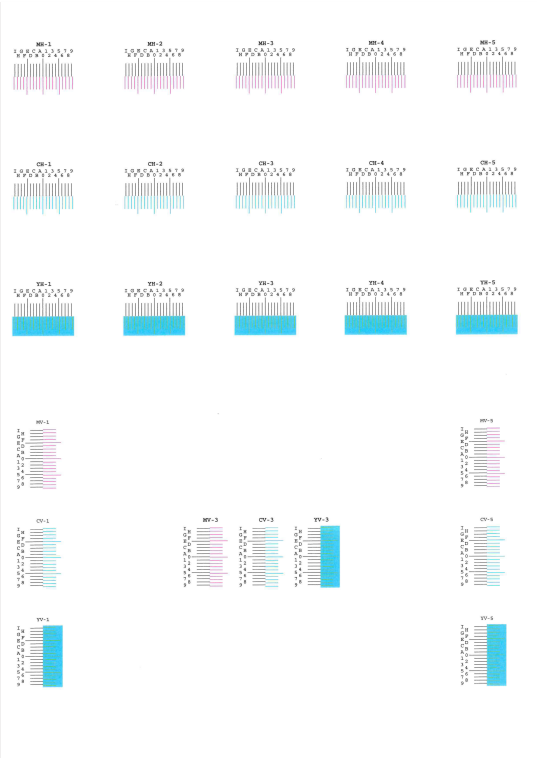

4 Displays the Correction menu.

Select [Registration]

The Magenta Correction menu is displayed.

5 Enter the appropriate value.

1 Find the location on each chart where 2 lines most closely match. If this is the 0 position, registration for that color is not required. For the illustration, B is the appropriate value.

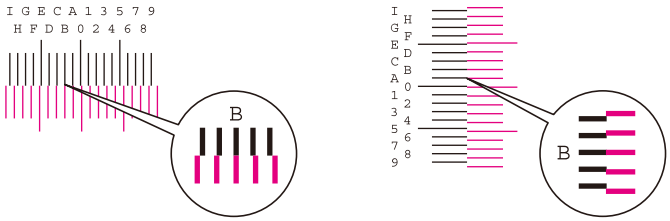

From charts H-1 to H-5, read the values from H-1 to H-5.

From charts V-1 to V-5, read only the values from V-3 (center).

2 Select the [▲] or the [▼] key and change items H-1 to H-5 and V-3, then select the [◀] or the [▶] key, input values loaded from the chart, and select the [Start] key.

Correct the Magenta, and after a short while, return to the Color Printing Position Correction Procedure Detail menu.

Select the [▲] key to advance the value from 0 to 9. Select the [▼] key to go in the opposite direction.

Select the [▼] key to change the value from 0 to the alphabet and from A to I. Select the [▲] key to go in the opposite direction.

It is not possible to enter values with the numeric keypad.

3 Repeat steps 1-2 to correct Cyan and Yellow.

Colors appear different than you anticipated

Is color copy paper set in the paper source?

Set the color copy paper.

Color adjustment needs to be performed.

1 Display the screen.

1. [Home] key > [...] > [System Menu] > [Adjustment/Maintenance] > [Image Adjustment]

2 Perform the color adjustment.

1. Select [ColorCalibration], and then select [Start].
   Color adjustment begins.

Is the color adjustment appropriate?

Adjust the color with the printer driver.

➡ **Printer Driver User Guide**

The color toner is empty

If you want to continue printing in black and white, follow these steps:

Black and white printing is possible temporarily.

1 **[Home] key > [...] > [System Menu] > [Device Settings] > [Toner Settings] > [Color Toner Empty Action]**

2 **Select [Print in Black & White].**

NOTE

This setting is not valid when the optional Fiery Controller is installed.

Remote Operation

This function enables the system administrator to explain how to operate the panel and troubleshoot to user, by accessing operation panel of the machine at remote using browser and VNC software.

Executing Remote Operation from Browser

The supported Browser is as follows. We recommend the latest version of browser to use Remote Operation.

- Google Chrome (Version 21.0 or later)
- Microsoft Edge
- Mozilla Firefox (Version 14.0 or later)
- Safari (Version 5.0 or later)

This section describes the procedure for performing remote operations from Command Center RX using Google Chrome.

NOTE

To execute Remote Operation using other browsers, refer to the following:

➡ **Command Center RX User Guide**

1 Display the screen

1 [Home] key > [...] > [System Menu] > [Network Settings] > [Protocol Settings]

2 Set [EnhncdVNC ov TLS] to On.

Protocol Settings

NOTE

You can configure the protocol settings using Command Center RX.

➡ **Command Center RX User Guide**

3 Configure settings for remote operation.

1 [Home] key > [...] > [System Menu] > [Network Settings] > [Remote Operation]

2 Select [Use Restriction] > [Use Password] or [Admin. Only].

When you select [Use Password], enter the password in "Password" and "Confirm Password", then select [OK].

NOTE

You can configure settings for remote operation using Command Center RX.

➡ **Command Center RX User Guide**

4 Restart the machine.

➡ Restart Entire Device (page 258)

5 Start up the browser.

Specify https: // [Host name of this Machine] and start Command Center RX.

➡ Accessing Command Center RX (page 100)

6 [Device Information / Remote Operation] > [Remote Operation]

7 Click [Start].

NOTE

- If the user is logged in to the device, the permission confirmation screen will be displayed on the operation panel. Select [Yes].
- If pop-up blocking of the browser occurs during connection of the Remote Operation, select Always allow pop-ups from https:// [host name], and click [Completed]. Perform [Start] after waiting 1 minute or more.

When the Remote Operation is started up, the operation panel screen will be displayed on the system administrator's or user's PC screen.

Executing Remote Operation from VNC Software

1 Display the screen

1 [Home] key > [...] > [Network Settings] > [Protocol Settings]

2 Set [VNC (RFB)] to On.

Protocol Settings

NOTE

- If "VNC (RFB) over TLS" is set to On, the communication is encrypted.
- You can configure the protocol settings using Command Center RX.

➡ **Command Center RX User Guide**

3 Startup the remote operation.

1 Start up the VNC software.

2 Enter the following format separated by a colon to start up the remote operation.

"IP address: port number"

NOTE

When setting "VNC (RFB)" to On in step 2, the default port number is 9062. When "VNC (RFB) over TLS" is set to On, the default port number is 9063.

Protocol Settings

Responding to Messages

If the touch panel or the computer displays any of these messages, follow the corresponding procedure.

NOTE

When contacting us, the serial number will be necessary. To check the serial number, refer to the following:

➡ Checking the Equipment's Serial Number (page 2)

"Access point was not detected." is displayed

Check if the access point has been set correctly.

"Account error. Press [OK]." is displayed

Failed to specify Job Accounting when processing the job externally.

The job is canceled. Select [OK].

NOTE

If Auto Error Clear is set to [On], the process will resume automatically after a set period of time. For details, refer to the following:

➡ Error Handling (page 213)

"Add paper to cassette #." is displayed

Is the indicated paper source out of paper?

Replenish the paper.

To print with paper from another paper source, select [Alt.]. To print with the selected paper, select [OK] or [Continue].

To cancel the job, select [Cancel].

"Box limit exceeded." is displayed

Jobs cannot be saved because the specified box is full. The job will be canceled.

Print or delete the original in the box, and then try again.

NOTE

If Auto Error Clear is set to [On], the process will resume automatically after a set period of time. For details, refer to the following:

➡ Error Handling (page 213)

"Cannot connect to Authentication Server." is displayed

Does the machine time match the server's time?

- Set the machine time to match the server's time

➡ Setting Date and Time (page 58)

Is it properly registered with the authentication server?

- Enable User Login Administration.

➡ Enable User Login Administration (page 280)

- Set the network authentication server.
  - Check the connection status with the server.
  - Confirm that the computer name and password for the authentication server are correct.

Is the machine connected to the network correctly?

➡ Connecting LAN Cable (page 41)

➡ Network Setup (page 60)

NOTE

If Auto Error Clear is set to [On], the process will resume automatically after a set period of time. For details, refer to the following:

➡ Error Handling (page 213)

"Cannot connect to the server." is displayed

Check the connection status with the server.

"Cannot connect." is displayed

Wi-Fi or Wi-Fi Direct connection could not be completed.

Select [OK]. Returns to the previous screen.

Check the settings and signal conditions.

➡ Wi-Fi Direct Setting (page 234)

➡ Wi-Fi Settings (page 236)

"Cannot duplex print on this paper." is displayed

Have you selected a size or type of paper that cannot be duplex printed?

To select paper that can be printed on both sides, selecting [Alt.] will display [Alternative] and you can change the paper source. Select [Continue] to cancel duplex printing and continue printing.

To cancel the job, select [Cancel] key.

"Cannot execute this job. Restricted by Authorization settings." is displayed

Restricted by the authorization settings.

The job is canceled. Select [OK].

Restricted by the job accounting.

The job is canceled. Select [OK].

NOTE

If Auto Error Clear is set to [On], the process will resume automatically after a set period of time. For details, refer to the following:

➡ Error Handling (page 213)

"Cannot perform remote printing." is displayed

Remote printing is prohibited.

The job is canceled. Select [OK].

"Cannot read data in this ID Card." is displayed

In registration process, the ID card information was not read correctly.

Hold the IC card over the IC card reader again. If the same message is displayed again, the IC card may not be compatible with this product. Replace it with another IC card.

"Cannot recognize." is displayed

- Check if the USB connector of your IC card reader is correctly connected to the main unit.
- If [USB Host] in [I/F Block Set.] is set to [Block], change it to [Unblock].

"Cannot use the cassette below due to a failure." is displayed

To continue as is, select [OK]. If repair is completed, select [Next].

"Color toner is empty. Cannot print this document." is displayed

Replace with the toner container specified by us.

NOTE

If there is still black toner left even after color toner has run out and [ColorToner Empty] is set to [Print in B & W], black and white printing is possible temporarily.

"Error occurred." is displayed

System error has occurred.

Follow the instruction displayed on the screen.

"High temperature. Adjust room temp." is displayed

Print quality may be deteriorated. Adjust the temperature and the humidity of your room.

"Incorrect account ID." is displayed

The account ID was incorrect when processing the job externally.

The job is canceled. Select [OK].

"Job Accounting restriction exceeded." is displayed

Is the acceptable printing count restricted by Job Accounting exceeded?

The printing count exceeded the acceptable count restricted by Job Accounting. Cannot print any more.

The job is canceled. Select [OK].

"Job not stored." is displayed

The job is canceled. Select [OK].

"KPDL error." is displayed

PostScript error has occurred.

The job is canceled. Select [OK].

NOTE

If Auto Error Clear is set to [On], the process will resume automatically after a set period of time. For details, refer to the following:

➡ Error Handling (page 213)

"Load paper in MP tray." is displayed

Does the paper source paper size setting not match the actual paper size that is fed?

There is no paper in the multipurpose tray that matches the print data. Set the paper. Select [OK] to resume printing.

To print from the other paper source, selecting [Alt.] will display [Alternative] and you can change the paper source. Select [Continue] to print without changing the paper source.

To cancel the job, select [Cancel].

"Low temperature. Adjust room temp." is displayed

Print quality may be deteriorated. Adjust the temperature and the humidity of your room.

"Machine failure. Call service." is displayed

Internal error has occurred.

Make a note of the error code displayed on the screen and contact service representative.

"MaliciousPRG detected Delete the program. Contact the admin." is displayed

Execution was aborted due to a possible malware program.

Please contact the administrator.

"Memory is full." is displayed

The memory is full and the job cannot be continued.

Select [OK]. The job is canceled. When insufficient memory occurred frequently, contact your dealer or service representative.

NOTE

If Auto Error Clear is set to [On], the process will resume automatically after a set period of time. For details, refer to the following:

➡ Error Handling (page 213)

"No multi copies." is displayed

Only one copy is available.

- Select [OK] to continue printing.
- Select [Cancel] to cancel the job.

"Paper jammed in Cassette #." is displayed

A paper jam has occurred.

If a paper jam occurs, the machine will stop and the location of the jam will be indicated on the screen. Leave the machine on and follow the instructions to remove the jammed paper.

➡ Jam Location Indicators (page 427)

"Performing" is displayed

The machine is in adjustment mode to maintain its quality. Please wait.

"Please wait. Regulating the temperature..." is displayed

The machine is in adjustment mode to maintain quality.

Please wait.

"RAM disk error." is displayed

A RAM disk error has occurred.

Select [OK].

The following error code is possible:

04: There is not enough free space on the RAM disk. If the optional RAM disk is installed, increase the RAM disk size by using [RAM Disk Setting] in the System Menu.

➡ RAM Disk Setting (page 260)

"Refreshing drum..." is displayed

The machine is in adjustment mode to maintain quality.

Please wait.

"Replace the toner. [C][M][Y][K]" is displayed

Replace the toner container to our specified toner container.

NOTE

If there is still black toner left even after color toner has run out and [ColorToner Empty] is set to [Print in B & W], black and white printing is possible temporarily.

CAUTION

Do not attempt to incinerate parts which contain toner. Dangerous sparks may cause burns.

Installation procedures of the toner container is same for every color. Here, we'll explain the procedures for the yellow toner container, as an example.

1 Open the right cover.

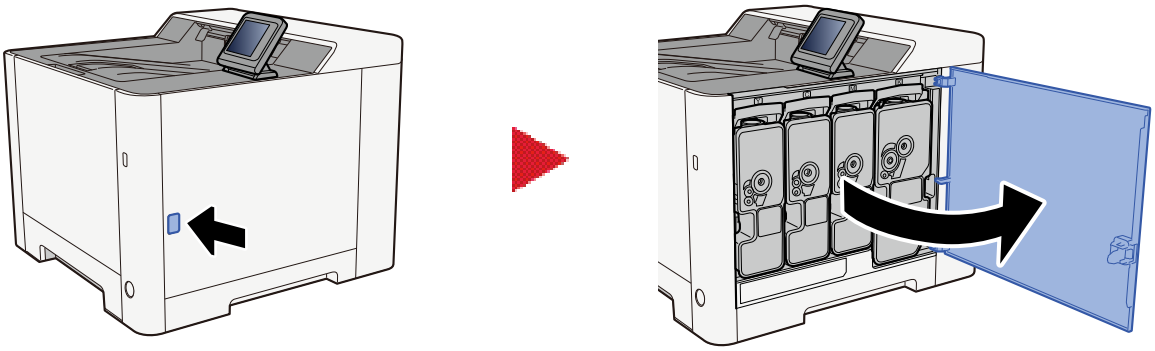

2 Unlock the toner container.

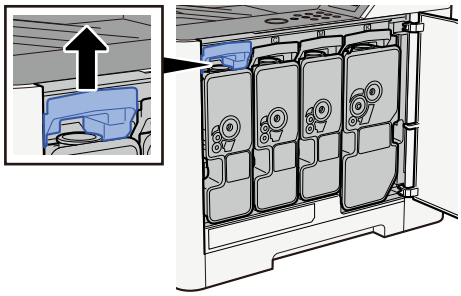

3 Remove the toner container

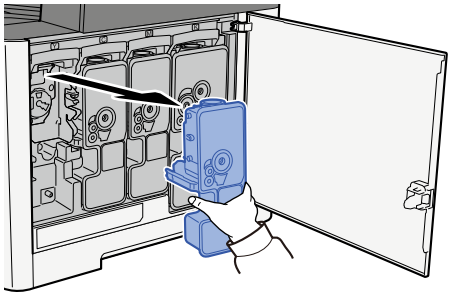

4 Put used toner container into the plastic waste bag.

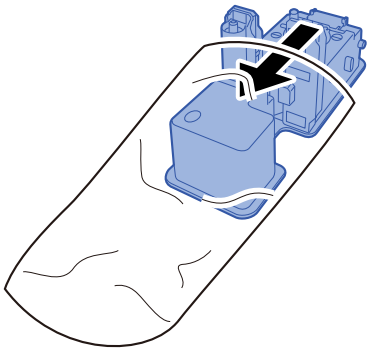

5 Remove the new toner container from the box.

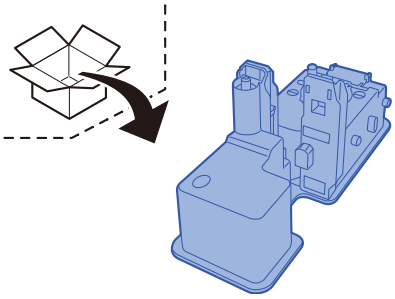

IMPORTANT

Do not touch the points shown below.

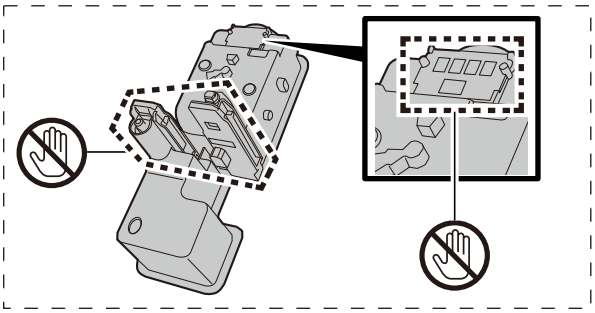

6 Shake the toner container.

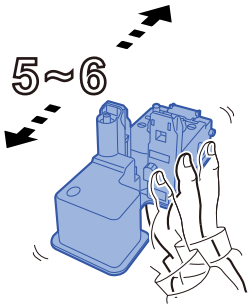

7 Install the toner container.

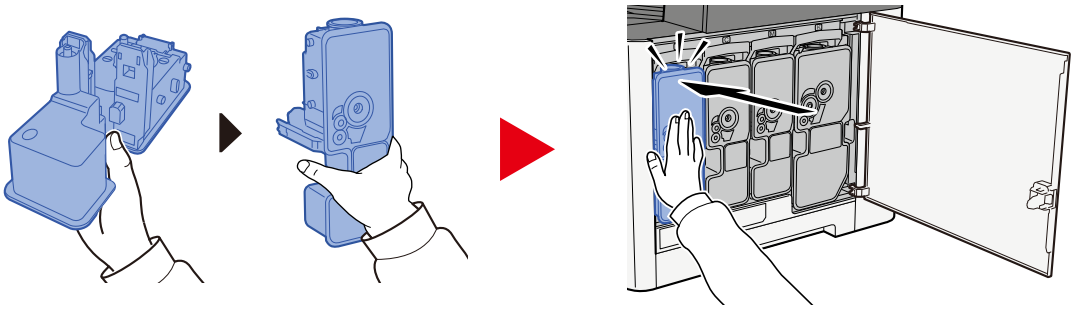

IMPORTANT

Insert the toner container all the way.

8 Close the right cover.

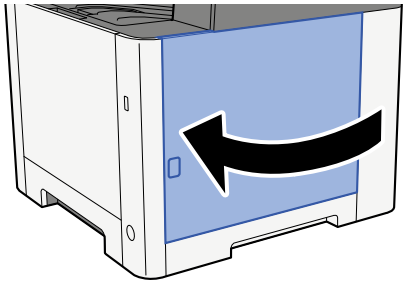

NOTE

- If the toner container cover or right cover does not close, check that the new toner container is installed correctly.
- Return the exhausted toner container to your dealer or service representative. The collected toner container will be recycled or disposed in accordance with the relevant regulations.

"Replace XXXXX" is displayed

Contact your service representative.

1 **[Home] key > [...] > [System Menu] > [Adjustment/Maintenance] > [Service Settings]**

"Shake the toner container. " is displayed

Open the top cover and take out the toner container. Shake the toner container well and set it again.

"The device cannot be connected because allowed connections would be exceeded." is displayed

Are you connecting more than the maximum number of Wi-Fi Direct connections?

The job is canceled. Select [OK]. Disconnect the devices that you are not using, or set the [Disconnect Timer] of this unit to disconnect the devices.

➡ Wi-Fi Direct Setting (page 234)

"Toner is low[C,M,Y,K]" is displayed

It is almost time to replace the toner container.

Obtain a new toner container.

"Toner type mismatch. [C][M][Y][K]" is displayed

Does the type of toner you have match the model?

Please install correct toner.

"USB Drive error." is displayed

Is the USB drive write-protected?

An error occurred in the USB drive. The job is canceled. Select [OK].

The following error code is displayed:

`01`: Connect a writeable USB drive.

An error occurred in the USB drive.

The job is canceled. Select [OK].

The following error code is displayed:

`01`: The amount of data that can be saved at once has been exceeded. Restart the system or turn the power OFF/ON.

If the error persists, the USB drive is not compatible with the machine. Use the USB drive formatted by this machine. If the USB drive cannot be formatted, it is damaged. Connect a compatible USB drive.

NOTE

If Auto Error Clear is set to [On], the process will resume automatically after a set period of time. For details, refer to the following:

➡ Error Handling (page 213)

"You cannot use this box." is displayed

You do not have permission to use the specified box.

The job is canceled. Select [OK].

Adjustment/Maintenance

Overview of Adjustment/Maintenance

If there is an image problem and the message to run adjustment or maintenance menu appears, run Adjustment/ Maintenance in the system menu.

The table below lists the item you can carry out.

Item	Description
[Color Regist.]	Correct the color position to resolve color drift. ➡ Color Registration Procedure (page 422)
[Image Adjustment]	**[Drum Refresh]** Remove image blur and white dots from the printout. It takes about 1 minute and 20 seconds. The time required may vary depending on the usage environment. **[Developer Refresh]** Adjust the printed image that is too light or incomplete, even though there is enough toner. **[Laser Scanner Cleaning]** Remove vertical white lines from the printout. **[ColorCalibration]** Calibrate the device to ensure correct toner overlapping and consistency with the original tone. ➡ Color Adjustment (page 421) **NOTE** • Drum refresh cannot be performed while printing. Execute drum refresh after the printing is done. • Waiting time may be longer when the toner is refilled during developer refresh. • When the correct toner overlapping is not ensured even after performing this color adjustment, refer to the following: ➡ Color Registration Procedure (page 422)

Color Adjustment

Due to long-term use and the influence of ambient temperature and humidity, the color tone of color output may change or color drift may occur. You can use this function to fine tune tone and color drift and enable optimized color printing. When the correct tone is not achieved or correct toner overlapping is not ensured even after performing this color adjustment, refer to the following:

➡ Color Registration Procedure (page 422)

1 Display the screen.

[Home] key > [...] > [System Menu] > [Adjustment/Maintenance] > [Image Adjustment] > [OK] key

2 Adjust.

[Calibration] > [OK] key

Select Color Adjustment in [Select], select [Start] to begin.

Color adjustment is performed, and when it is finished, the system returns to Adjustment/Maintenance.

Color Registration Procedure

Correct the color position to resolve color drift. If standard registration does not resolve the problem or to perform more detailed settings, use the detailed registration.

NOTE

When performing color registration, check that A4 paper is loaded in the cassette.

IMPORTANT

Before performing color registration, be sure to perform Color Adjustment. If color drift remains, perform color registration. By performing color registration without performing Color Adjustment, the color drift will be resolved once, however, it may cause the serious color drift later.

See the table below regarding Color Adjustment.

➡ Color Adjustment (page 421)

Performing Color Registration Procedure (Standard Registration)

1 Load paper.

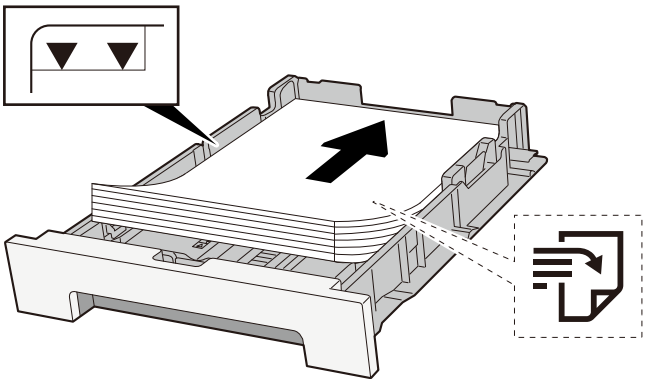

IMPORTANT

- Load the paper with the print side facing up.
- After removing new paper from its packaging, fan out the paper before loading it in the cassettes.

  ➡ Precaution for Loading Paper (page 108)
- Before loading the paper, be sure that it is not curled or folded. Paper that is curled or folded may cause paper jams.
- Ensure that the loaded paper does not exceed the level indicator (see illustration above).
- If paper is loaded without adjusting the paper length guide and paper width guide, the paper may skew or become jammed.

2 Display the screen.

[Home] key > [...] > [System Menu] > [Adjustment/Maintenance] > [Color Registration - Normal]

3 Print the chart.

Select [Print Chart]

A chart is printed. Three types of charts are printed on a single sheet of paper for the three colors M (Magenta), C (Cyan), and Y (Yellow): H-L (Left), V (Center), and H-R (Right).

After printing, return to the Color Printing Position Correction Standard menu.

Chart Example

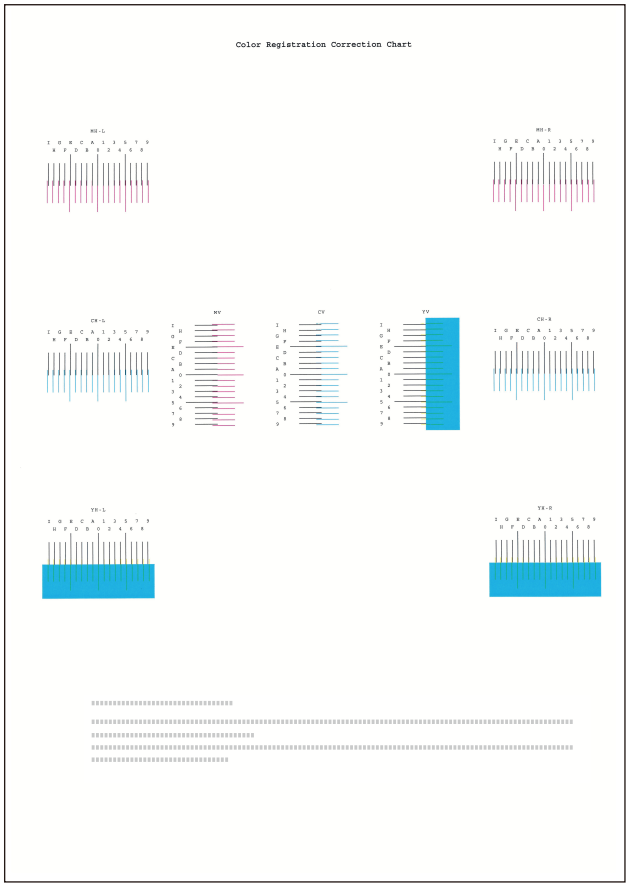

4 Displays the Correction menu.

Select [Registration]

The Magenta Correction menu is displayed.

5 Enter the appropriate value.

1 Find the location on each chart where 2 lines most closely match. If this is the 0 position, registration for that color is not required. For the illustration, B is the appropriate value.

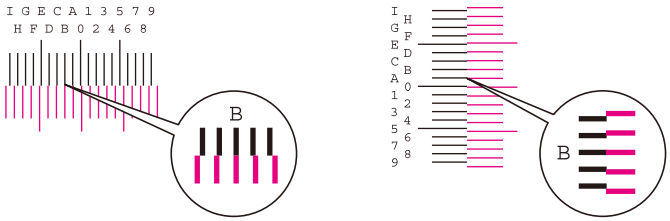

2 Select [▲] or the [▼] key and change items H-L, V and H-R, select [◀] or the [▶] key, input values loaded from the chart, and select the [Start] key.

Correct the Magenta, and after a short while, return to the Color Printing Position Correction Standard menu.

Select the [▲] key to advance the value from 0 to 9. Select the [▼] key to go in the opposite direction.

Select the [▼] key to change the value from 0 to the alphabet and from A to I. Select the [▲] key to go in the opposite direction.

It is not possible to enter values with the numeric keypad.

3 Repeat steps 1-2 to correct Cyan and Yellow.

Performing Color Registration Procedure (Detailed Registration)

1 Load paper.

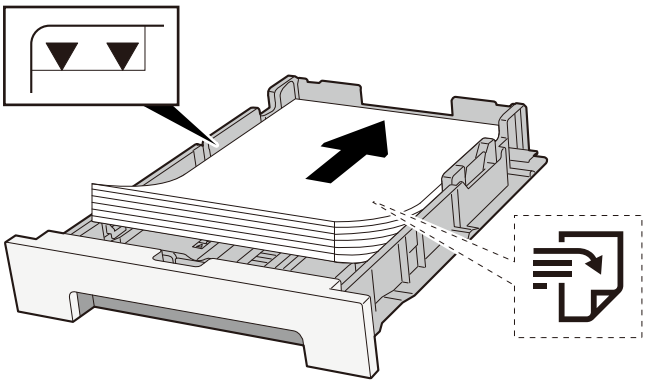

2 Display the screen.

[Home] key > [...] > [System Menu] > [Adjustment/Maintenance] > [Color Registration - Manual]

3 Print the chart.

Select [Print Chart]

A chart is printed. On the chart, for each of M (magenta), C (cyan) and Y (yellow), charts for H-1 to 5 and V-1 to 5 are printed.

After printing, return to the Color Printing Position Correction Details menu.

Chart Example

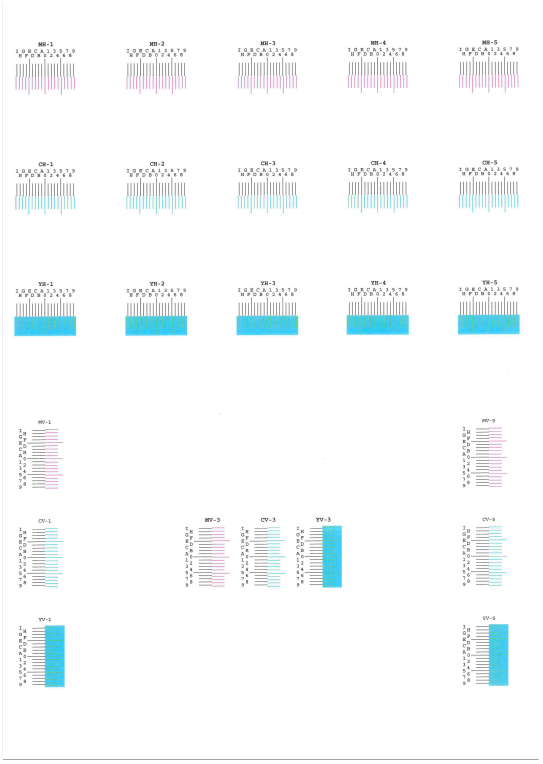

4 Displays the Correction menu.

Select [Registration]

The Magenta Correction menu is displayed.

5 Enter the appropriate value.

1 Find the location on each chart where 2 lines most closely match. If this is the 0 position, registration for that color is not required. For the illustration, B is the appropriate value.

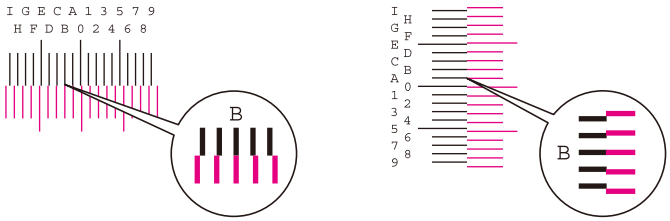

From charts H-1 to H-5, read the values from H-1 to H-5.

From charts V-1 to V-5, read only the values from V-3 (center).

2 Select the [▲] or the [▼] key and change items H-1 to H-5 and V-3, then select the [◀] or the [▶] key, input values loaded from the chart, and select the [Start] key.

Correct the Magenta, and after a short while, return to the Color Printing Position Correction Procedure Detail menu.

Select the [▲] key to advance the value from 0 to 9. Select the [▼] key to go in the opposite direction.

Select the [▼] key to change the value from 0 to the alphabet and from A to I. Select the [▲] key to go in the opposite direction.

It is not possible to enter values with the numeric keypad.

3 Repeat steps 1-2 to correct Cyan and Yellow.

Clearing Paper Jams

If a paper jam occurs, the LCD panel will display "Paper jam." and the machine will stop.

Jam Location Indicators

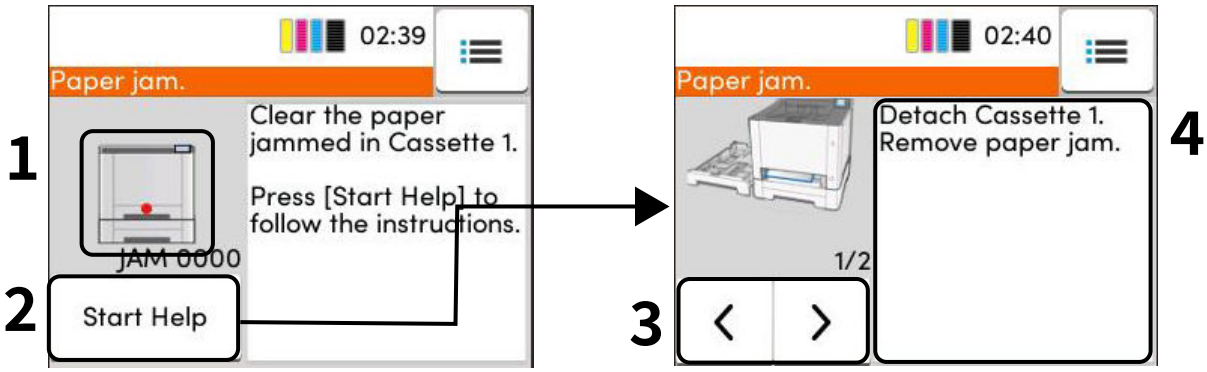

1 Shows the location of a paper jam.

2 Shows the Help screen. The Help screen shows the procedure to clear the jam.

NOTE

For the Help screen, refer to the following:

➡ Help Screen (page 55)

3 Returns to the previous step.

4 Shows the removal procedure.

If a paper jam occurs, the location of the jam will be displayed on the LCD panel as well as the clearing instructions.

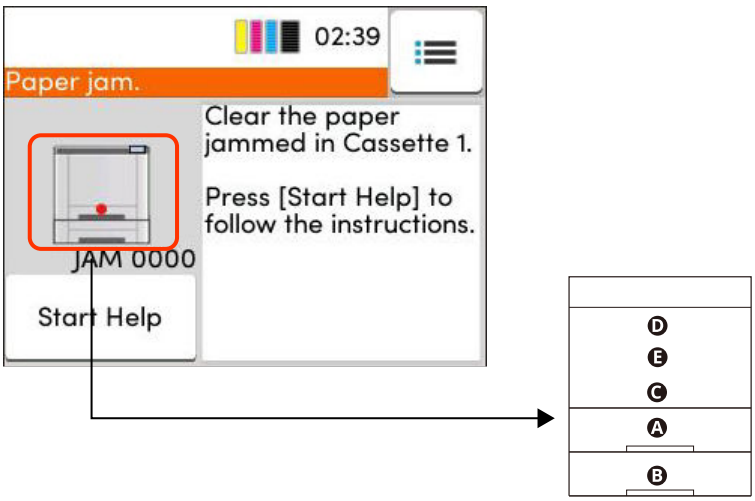

Paper Jam Location Indicator	Paper Jam Location
A	Cassette 1 ➡ Remove paper jams from Cassette 1 to Cassette 2 (page 432)
B	Cassette 2 ➡ Remove paper jams from Cassette 1 to Cassette 2 (page 432)
C	Multipurpose Tray ➡ Remove any jammed paper in the Multipurpose Tray (page 429)
D	Duplex Unit ➡ Remove the paper jammed in the Rear Cover 1 (page 433)
E	Rear Cover1 ➡ Remove the paper jammed in the Rear Cover 1 (page 433)

After you remove the jam, the machine will warm up again and the error message will be cleared. The machine resumes with the page that was printing when the jam occurred.

Remove any jammed paper in the Multipurpose Tray

CAUTION

- Do not reuse jammed papers.
- If the paper tears during removal, be sure to remove any loose scraps of paper from inside the machine. Scraps of paper left in the machine could cause subsequent jamming.

1 Remove any jammed paper.

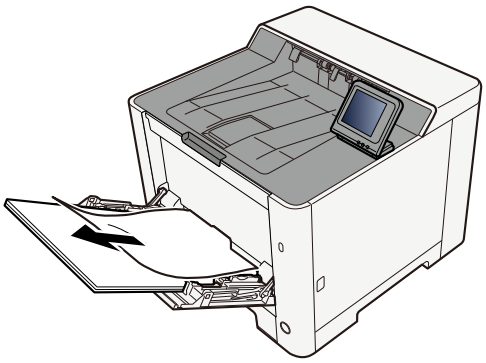

2 Remove all the paper.

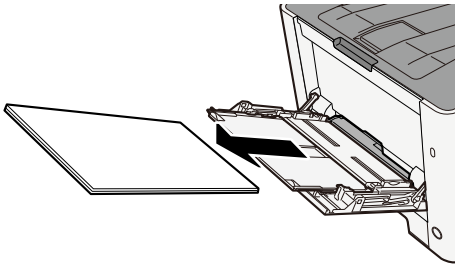

3 Close the multipurpose tray and pull-out cassette 1.

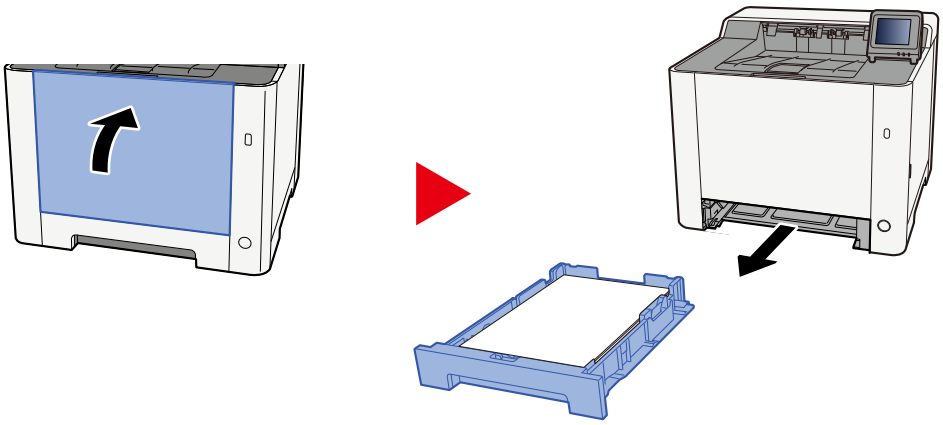

4 Open the feed cover.

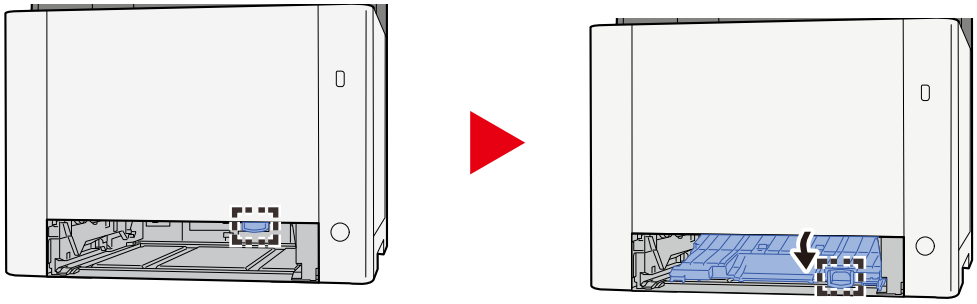

5 Remove any jammed paper.

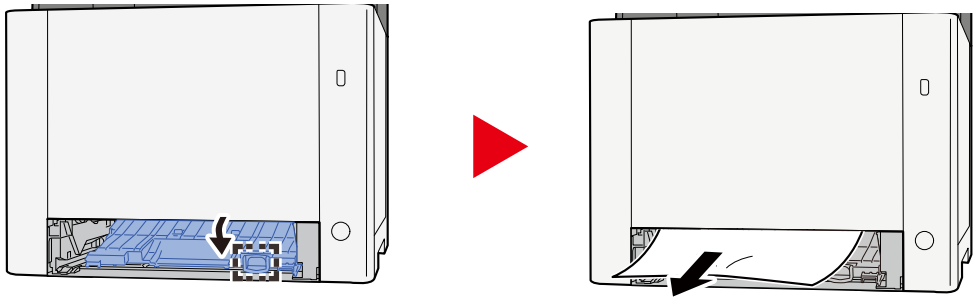

6 Return the feed cover to its original position and return cassette 1 to its original position.

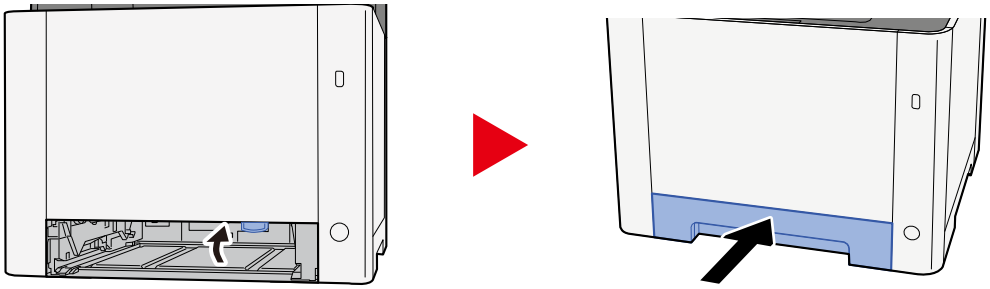

7 Open the multipurpose tray and reload the paper.

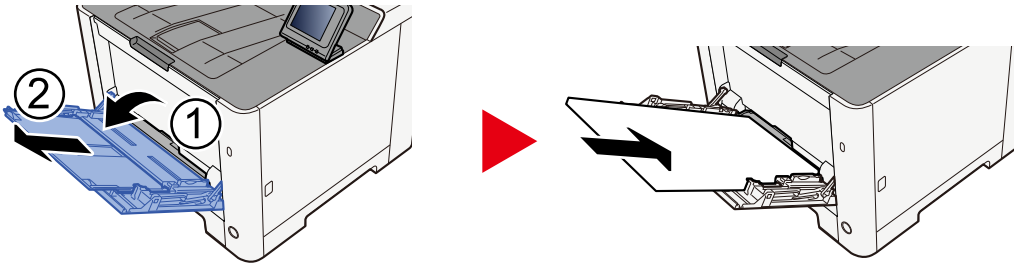

Remove paper jams from Cassette 1 to Cassette 2

The procedure for handling paper jams in Cassette 1 to Cassette 2.

CAUTION

- Do not reuse jammed papers.
- If the paper tears during removal, be sure to remove any loose scraps of paper from inside the machine. Scraps of paper left in the machine could cause subsequent jamming.

1 Pull Cassette 1 out toward you until it stops.

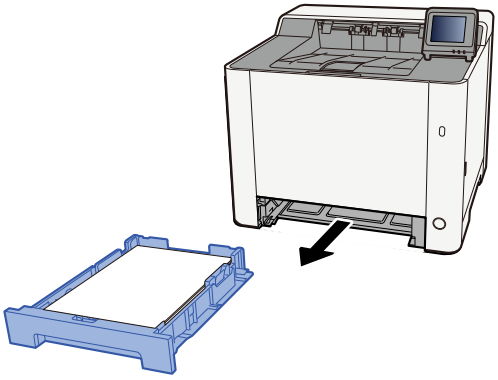

2 Remove any jammed paper.

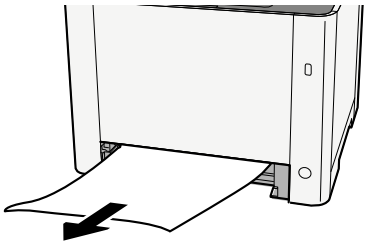

3 Push Cassette 1 back in.

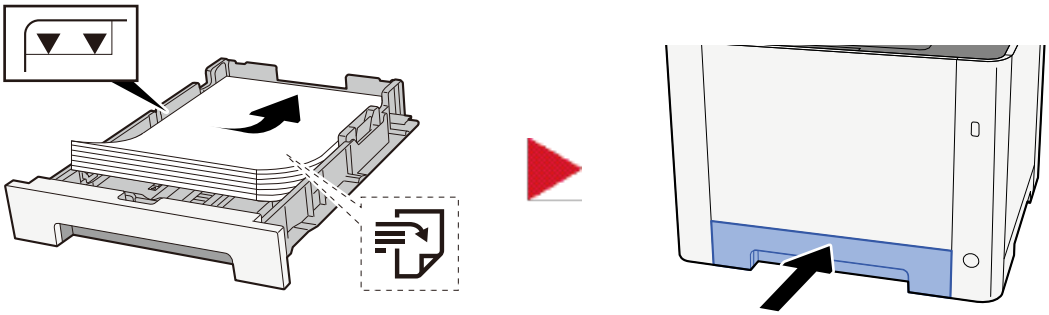

Remove the paper jammed in the Rear Cover 1

1 Open Rear Cover 1

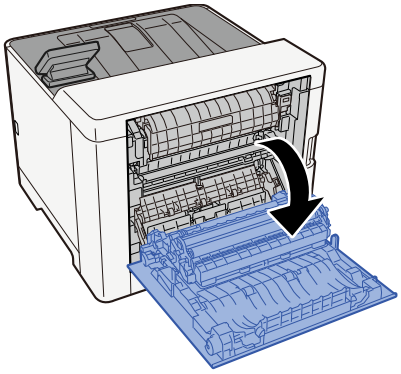

CAUTION

Some parts are very hot inside the machine. Exercise caution as there is a risk of burn injury.

2 Remove any jammed paper.

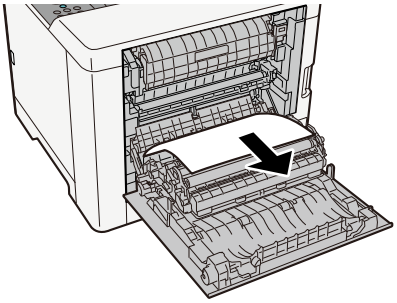

3 Open the cover (A).

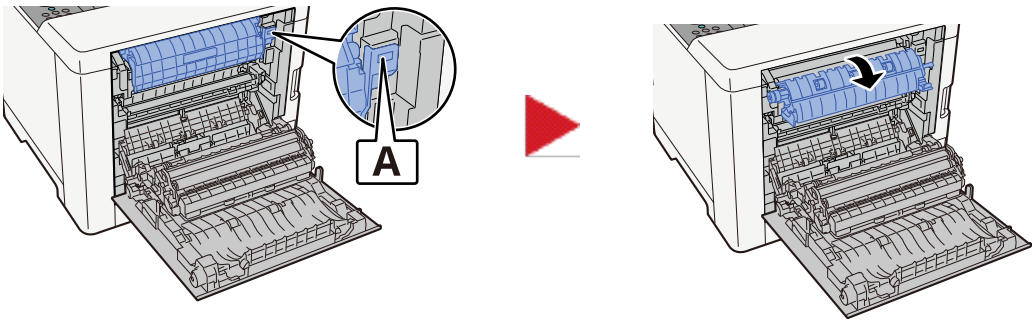

4 Remove any jammed paper.

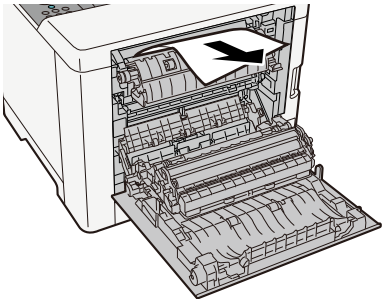

5 Open the feed cover (B).

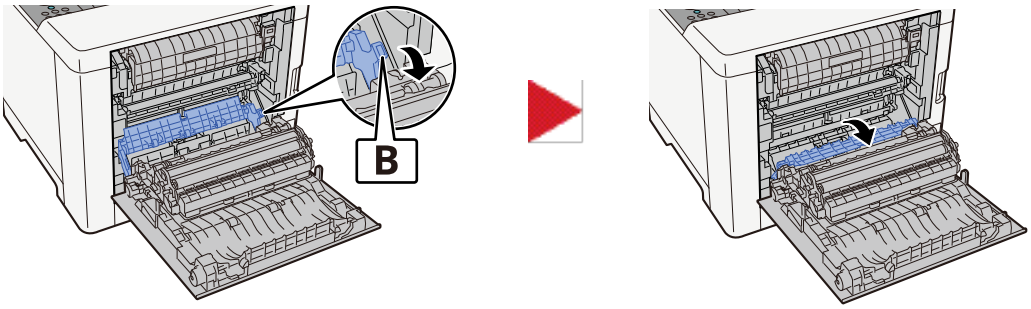

6 Remove any jammed paper.

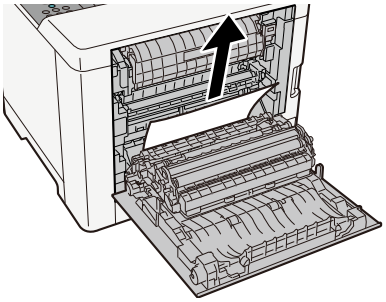

7 Open the duplex unit (C).

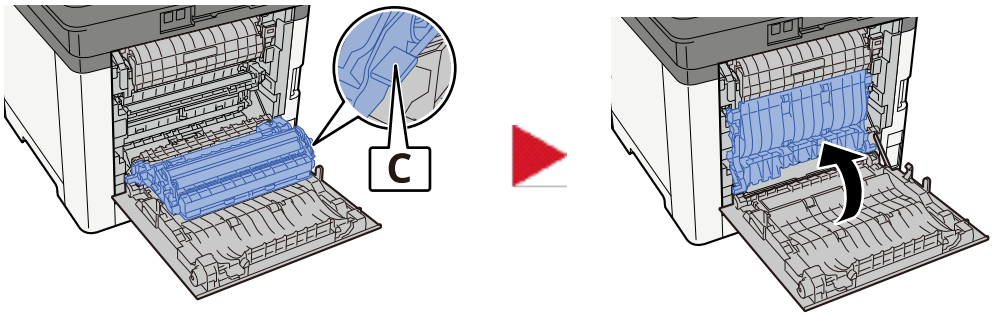

8 Remove any jammed paper.

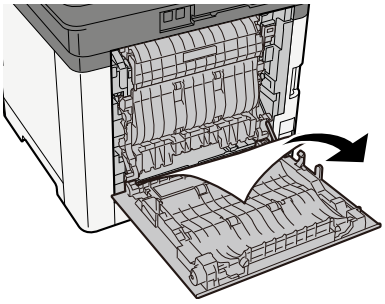

9 Push Rear Cover 1.

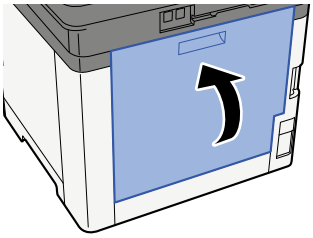

Remove the paper jammed in the Rear Cover 2

1 Open rear cover 2

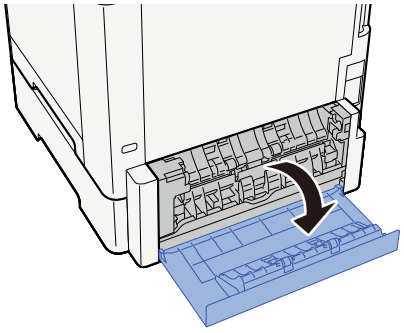

2 Remove any jammed paper.

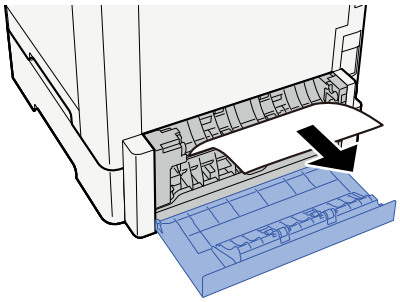

3 Push Rear Cover 2.

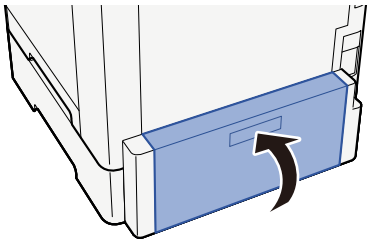

11 Appendix

Optional Equipment

Option configuration

The following enhancements are available for this model.

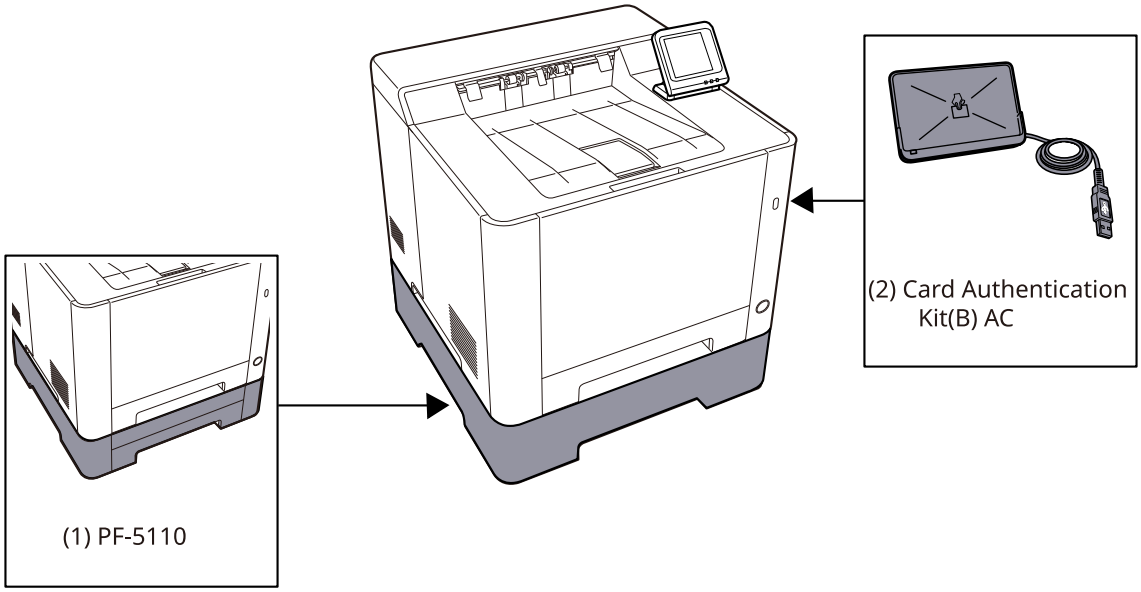

1 PF-5110 <Paper feeder>

It is possible to add 1 drawer that is same as the cassette of the main unit

The way of loading paper is same as the standard cassette.

2 Card Authentication Kit(B) AC <IC card authentication kit (Activate)>

It is possible to make the user authentication with IC card. In order to perform the user authentication with IC card, IC card information has to be registered to the local user list in advance.

Refer to the following for the method of the registration.

➡ **IC CARD AUTHENTICATION KIT (B) OPERATION GUIDE**

3 A USB keyboard can be used to enter information into the text fields on the operation panel. A special mount is also available to install the keyboard on the machine. Please contact your dealer or service representative for information on keyboards that are compatible with your machine before you purchase one.

Software option

1 UG-33 AC <ThinPrint expansion kit (Activate)>

It is possible print the print data directly even without the print driver.

Reading the SD/SDHC Memory Card

Once inserted in the machine's slot, the contents of the SD/SDHC memory card can be read from the operation panel or automatically when you power on or reset the machine.

Overview of the Applications

The applications listed below are installed on this machine.

- Data Security Kit
- ThinPrint Option

  This can be used on a trial basis for a limited time.
- Card Authentication Kit

  This can be used on a trial basis for a limited time.

NOTE

- Restrictions such as the number of times the application can be used during the trial period differ depending on the application.
- If you change the date/time while using the trial version of an application, you will no longer be able to use the application.

Starting Application Use

1 Display the screen.

[Home] key > [...] > [System Menu] > [Add/Delete Application] > [Add/Delete Application]

NOTE

If the user authentication screen appears, log in with a user who has the privilege to configure this setting. If you do not know your login user name or password, please contact your administrator.

2 Select the preferred application > [Activate]

You can view detailed information on the selected application by selecting (information icon).

3 Enter the license key > [Official]

Some applications do not require you to enter a license key. If the license key entry screen does not appear, go to step 4.

To use the application as a trial, select [Trial] without entering the license key.

4 Select [Start] in the confirmation screen.

NOTE

- If you started the Data Encryption/Overwrite or UG-33 AC, turn the power OFF/ON.
- Icons of activated application are displayed in the Home screen.

Checking Details of Application

1 Display the screen.

[Home] key > [...] > [System Menu] > [Add/DeleteApplication] > [Optional Function List]

NOTE

If the user authentication screen appears, log in with a user who has the privilege to configure this setting. If you do not know your login user name or password, please contact your administrator.

2 Select (information icon) for the application whose detailed information you want to check.

The detail information is available on the selected application.

The items that can be referenced are as follows:

- Function Name
- License
- Remaining Trial Counts
- Expiration Date of Trial
- Status

NOTE

To extend the trial period, select [Extend].

Character Entry Method

To enter characters for a name, use the on-display keyboard in the touch panel following the steps.

NOTE

[Keyboard Layout]

"QWERTY", "QWERTZ" and "AZERTY" are available as keyboard layouts similar with the computer keyboard layout.

Entry Screens

Lower-case Letter Entry Screen

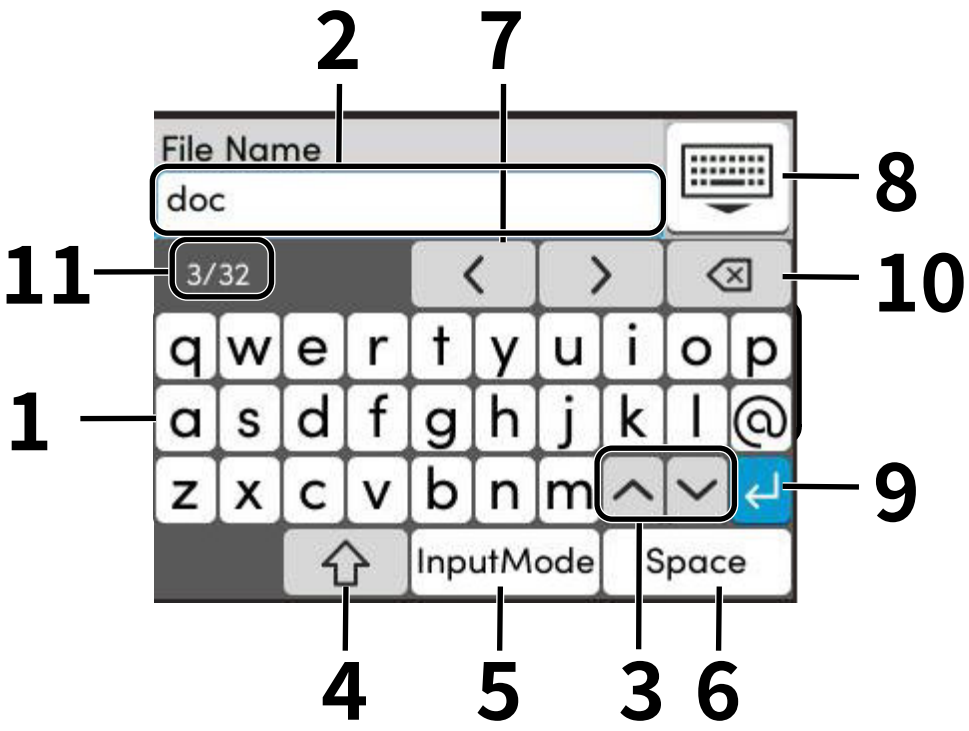

1 Keyboard

Select the character to enter.

2 Input box

Enter characters in the selected box.

3 Swiping key

Select to move to the next keyboard.

4 Shift key

Select to switch between upper case and lower case.

5 Input Mode key

Select the characters that are entered.

6 Space key

Select to insert a space.

7 Cursor key

Select to move the cursor on the display.

8 Close key

Select to close the entry screen.

9 Enter key

Select to finalize entry and return to the screen before the entry.

10 Backspace key

Select to delete a character to the left of the cursor.

11 Input / Limit display

Displays maximum number of characters and the number of characters entered.

Upper-case Letter Entry Screen

Select the Shift key.

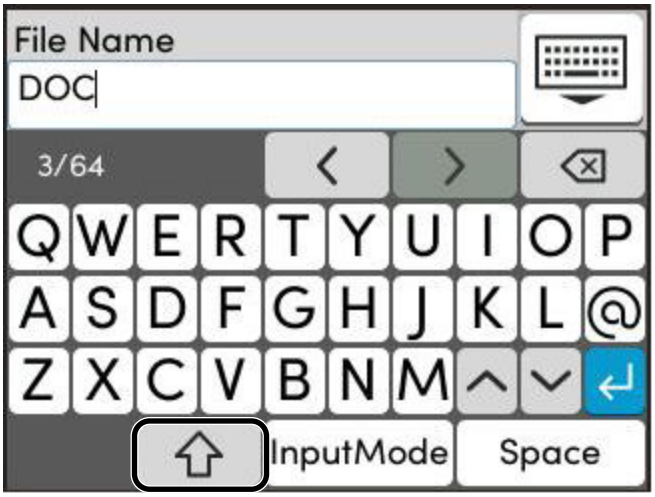

Number/Symbol Entry Screen

Select ?123.

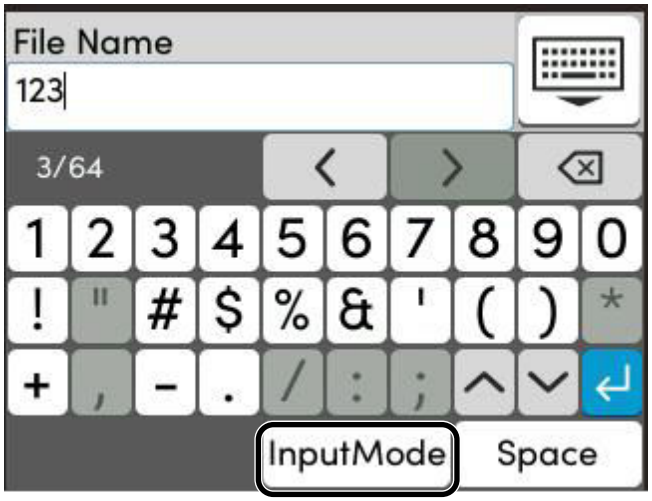

Selecting Type of Characters

Follow the steps below to enter 'List #1' for an example

1 Enter 'List', (space).

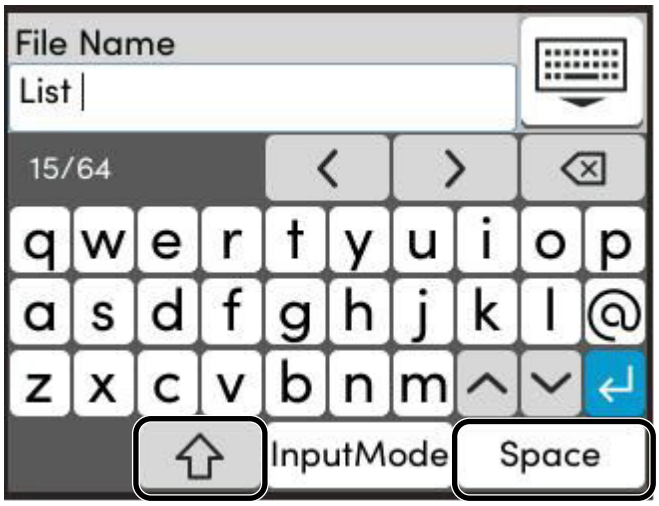

To switch between upper case and lower case, select the Shift key.

2 Enter '#' and '1'.

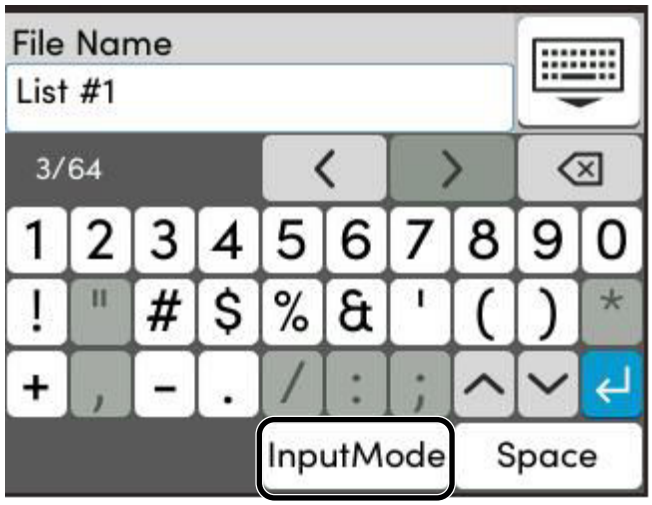

To enter numbers or symbols, select ?123.

3 Check that the entry is correct.

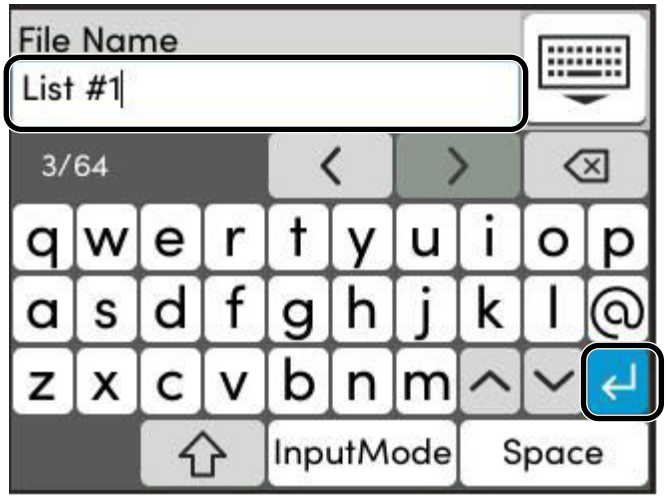

Check that the entry is correct. Select enter.

About Paper

This section explains the paper sizes and types that can be used in the paper source.

For details on the sizes, types, and number of sheets of paper that can be loaded in each paper tray, refer to the following:

➡ Specifications (page 460)

Basic Paper Specifications

This machine is designed to print on standard copy paper as used in regular ('dry') copiers and page printers such as laser printers. It also supports a variety of other types of paper that conform to the specifications given in this appendix.

Be careful when choosing paper. Paper unsuitable for the machine may cause jams or may be wrinkled.

Supported Paper

Use standard copy paper for regular copiers or laser printers. The printing quality will be affected by the quality of paper. Poor quality paper may result in unsatisfactory output.

Basic Paper Specifications

The following table lists the specifications of paper that is supported with this machine.

Criteria	Specifications
Weight	Cassettes: 60 to 163 g/m^2
	Multipurpose tray: 60 to 220 g/m^2, 230g/m^2
Dimensional accuracy	±0.7 mm
Squareness of corners	90° ±0.2°
Moisture Content	4 to 6%
Pulp content	80% or more

NOTE

Some recycled paper does not meet requirements for use with this machine as listed in the Basic Paper Specifications shown below, such as moisture or pulp content. For this reason, we recommend purchasing a small amount of recycled paper as a sample for testing prior to use. Choose recycled paper that gives the best printing results and contains low levels of paper dust.

We are not responsible for the problems occurred from the use of paper that does not conform to our specifications.

Choosing the Appropriate Paper

This section describes guidelines for choosing paper.

Condition

Avoid using paper with bent corners or that is curled, dirty, or torn. Do not use paper that has a rough surface or paper fiber lint, or that is especially delicate. Using such paper can cause poor print quality. In addition, poor paper feeding can cause paper jams and shorten the life of the machine. Use paper with a smooth and even surface. However, do not use paper that has been surface-treated, such as coating, as it may damage the drum and fusing unit.

Ingredients

Do not use paper such as paper that has been coated or surface-treated or paper that contains plastic or carbon. Those types of paper may produce harmful fumes from the heat of printing and may damage the drum.

Be sure to use standard paper that contains at least 80% pulp. Be sure to use standard paper with 20% or less of the paper content consisting of cotton or other fibers.

Smoothness

The paper surface should be smooth, but it must be uncoated. With paper that is too smooth and slippery, several sheets may accidentally be supplied at once, causing jams.

Basis Weight

In countries that use the metric system, basis weight is the weight in grams of one sheet of paper one square meter in area. In the United States, basis weight is the weight in pounds of one ream (500 sheets) of paper cut to the standard size (or trade size) for a specific grade of paper.

Paper that is too heavy or too light may be supplied incorrectly or cause paper jams, which may cause excessive wear of the machine. Mixed paper weight (i.e., thickness) may cause several sheets to be supplied at once accidentally and may also cause blurring or other printing problems if the toner fails to adhere correctly.

Moisture Content

Paper moisture content is the ratio of moisture to dryness expressed as a percentage. Moisture affects how the paper is supplied, the electrostatic chargeability of the paper, and how the toner adheres.

Paper moisture content varies depending on the relative humidity in the room. High relative humidity causes paper to become damp, making the edges expand so it appears wavy. Low relative humidity causes paper to lose moisture, making the edges tighten and weakening print contrast.

Wavy or tight edges may cause the paper to slip when it is supplied. Try to keep the moisture content between 4 to 6%.

To maintain the right level of moisture content, bear in mind the following considerations.

- Store paper in a cool, well-ventilated place.
- Store paper flat and unopened in the package. Once the package is opened, reseal it if the paper is not to be used for a while.
- Store paper sealed in the original package and box. Put a pallet under the box to keep it raised above the floor. Especially during rainy seasons keep the paper a sufficient distance away from wooden or concrete floors.
- Before using paper that has been stored, keep it at the proper moisture level for at least 48 hours.
- Do not store paper where it is exposed to heat, sunlight, or dampness.

Other Paper Specifications

Porosity:

The density of the paper fibers.

Stiffness:

Paper must be stiff enough or it may buckle in the machine, causing jams.

Curl:

Most paper naturally tends to curl after the package is opened. When paper passes through the fixing unit, it curls upward slightly. To deliver flat printouts, load the paper so that the curl faces towards the bottom of the paper tray.

Static electricity:

During printing, paper is electrostatically charged so that the toner adheres. Choose paper that can be discharged quickly so that copies do not cling together.

Whiteness:

Paper whiteness affects print contrast. Use whiter paper for sharper, brighter copies.

Quality:

Machine problems may occur if sheet sizes are not uniform or if corners are not square, edges are rough, sheets are uncut, or edges or corners are crushed. In order to prevent these problems, be especially careful when you cut the paper yourself.

Packaging:

Choose paper that is properly packaged and stacked in boxes. Ideally, the packaging itself should have been treated with a coating to inhibit moisture.

Specially treated paper:

We do not recommend printing onto the following types of paper, even if it conforms to the basic specifications. When you use these kinds of paper, purchase a small amount first as a sample to test.

- Glossy paper
- Watermarked paper
- Paper with an uneven surface
- Perforated paper

Paper Sizes that can be Used with This Machine

Paper of the following sizes is supported by the machine.

Measurements in the table take into account a ±0.7 mm dimensional accuracy for length and width. Corner angles must be 90° ± 0.2°.

Paper Size	Cassette 1	Cassette 2	Multipurpose Tray
Envelope Monarch (3-7/8 × 7-1/2")	Paper of this size cannot be set	Paper of this size cannot be set	Paper of this size can be set
Envelope #10 (4-1/8 × 9-1/2")	Paper of this size cannot be set	Paper of this size cannot be set	Paper of this size can be set
Envelope DL (110 × 220 mm)	Paper of this size cannot be set	Paper of this size cannot be set	Paper of this size can be set
Envelope C5 (162 × 229 mm)	Paper of this size cannot be set	Paper of this size cannot be set	Paper of this size can be set

Paper Size	Cassette 1	Cassette 2	Multipurpose Tray
Executive (7-1/4 × 10-1/2")	Paper of this size cannot be set	Paper of this size cannot be set	Paper of this size cannot be set
Letter (8-1/2 × 11")	Paper of this size can be set	Paper of this size can be set	Paper of this size can be set
Legal (8-1/2 × 14")	Paper of this size can be set	Paper of this size can be set	Paper of this size cannot be set
A4 (297 × 210 mm)	Paper of this size can be set	Paper of this size can be set	Paper of this size cannot be set
B5 (257 × 182 mm)	Paper of this size can be set	Paper of this size can be set	Paper of this size cannot be set
A5-R (148 × 210mm)	Paper of this size can be set	Paper of this size can be set	Paper of this size cannot be set
A5 (210 × 148 mm)	Paper of this size can be set	Paper of this size can be set	Paper of this size cannot be set
A6 (148 × 105 mm)	Paper of this size can be set	Paper of this size can be set	Paper of this size cannot be set
B6 (182 × 128 mm)	Paper of this size can be set	Paper of this size can be set	Paper of this size cannot be set
Envelope #9 (3-7/8 × 8-7/8")	Paper of this size cannot be set	Paper of this size can be set	Paper of this size can be set
Envelope #6 (3-5/8 × 6-1/2")	Paper of this size cannot be set	Paper of this size cannot be set	Paper of this size can be set
ISO B5 (176 × 250 mm)	Paper of this size can be set	Paper of this size can be set	Paper of this size cannot be set
Hagaki (Cardstock) (100 × 148 mm)	Paper of this size cannot be set	Paper of this size cannot be set	Paper of this size can be set
Oufuku hagaki (Return postcard) (148 × 200 mm)	Paper of this size cannot be set	Paper of this size cannot be set	Paper of this size can be set
Oficio II (8-1/2 × 13")	Paper of this size can be set	Paper of this size can be set	Paper of this size cannot be set
216 × 340 mm	Paper of this size can be set	Paper of this size can be set	Paper of this size cannot be set
16K (273 × 197 mm)	Paper of this size can be set	Paper of this size can be set	Paper of this size cannot be set
Statement (5-1/2 × 8-1/2")	Paper of this size can be set	Paper of this size can be set	Paper of this size cannot be set
Folio (210 × 330 mm)	Paper of this size can be set	Paper of this size can be set	Paper of this size cannot be set
Youkei 4 (105 × 235 mm)	Paper of this size cannot be set	Paper of this size cannot be set	Paper of this size can be set
Youkei 2 (114 × 162 mm)	Paper of this size cannot be set	Paper of this size cannot be set	Paper of this size can be set
Nagagata 3 (120 × 235mm)	Paper of this size cannot be set	Paper of this size cannot be set	Paper of this size cannot be set

Paper Size	Cassette 1	Cassette 2	Multipurpose Tray
Nagagata 4 (90 × 205mm)	Paper of this size cannot be set	Paper of this size cannot be set	Paper of this size cannot be set
Younaga 3 (235 ×120mm)	Paper of this size cannot be set	Paper of this size cannot be set	Paper of this size cannot be set
Kakugata	Paper of this size cannot be set	Paper of this size cannot be set	Paper of this size can be set
Size Input	Cassette 1: 105 × 148 to 216 × 356 mm Cassette 2: 105 × 148 to 216 × 356 mm Multipurpose Tray: 70 × 148 to 216 × 356 mm		

Special Paper

This section describes printing onto special paper and print media.

The following paper and media can be used.

- Transparencies
- Preprint
- Bond paper
- Recycled paper
- Vellum
- Rough
- Letterhead
- Colored Paper
- Prepunched paper
- Envelopes
- Hagaki (Cardstock)
- Thick Paper
- Labels
- Coated Paper
- High-quality paper

When using these paper and media, choose those that are designed specifically for copiers or page printers (such as laser printers). Use the multipurpose tray for transparency, labels, vellum, envelope, cardstock, coated.

Choosing Special Paper

Although special paper that meets the following requirements can be used with the machine, print quality will vary considerably due to differences in the construction and quality of special paper. Thus, special paper is more likely than regular paper to cause printing problems. Before purchasing special paper in volume, try testing a sample to ensure the print quality is satisfactory. General precautions when printing onto special paper are given below. Note that we are not responsible for any harm to the user or damage to the machine caused by moisture or specifications of special paper.

Select a cassette or multipurpose tray for special paper.

Transparencies

Transparencies must be able to withstand the heat of printing. Transparencies must meet the following conditions.

Heat resistance	Must withstand at least 190°C
Thickness	0.100 to 0.110 mm
Material	Polyester
Dimensional accuracy	±0.7 mm
Squareness of corners	90° ±0.2°

To avoid trouble, be sure to load transparencies in portrait orientation (i.e., the longer edge facing the machine).

If transparencies jam frequently at output, try pulling the leading edge of sheets gently as they are ejected.

Labels

Be sure to feed labels from the multipurpose tray

For selecting labels, use extreme care so that the adhesive may not come in direct contact with any part of the machine and that the labels are not easily peeled from the carrier sheet. Adhesives that stick to the drum or rollers and peeled labels remaining in the machine may cause a failure.

When printing onto labels, you must be liable for the print quality and possible trouble.

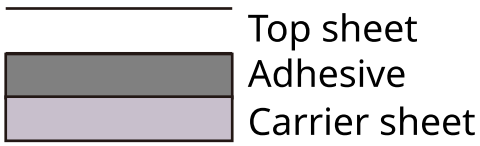

Labels consist of three layers as shown in the illustration. The adhesive layer contains materials that are easily affected by the force applied in the machine. The carrier sheet bears the top sheet until the label is used. This composition of labels may cause more problems.

The label surface must be covered completely with the top sheet. Gaps between labels may cause peeling of labels, resulting in a serious failure.

Some label paper has large margins on the top sheet. When using such paper, do not peel these margins from the carrier sheet before completing output.

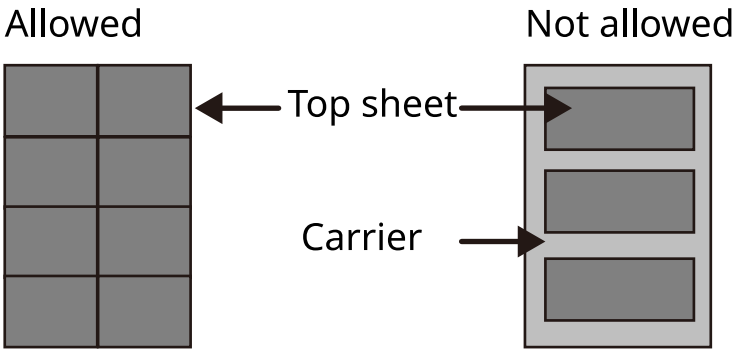

Use label paper that conforms to the following specifications.

Top sheet weight	44 to 74 g/m^2
Basis weight(overall paper weight)	104 to 151 g/m^2
Top sheet thickness	0.086 to 0.107 mm
Overall paper thickness	0.115 to 0.145 mm
Moisture Content	4 to 6 % (composite)

Hagaki (Cardstock)

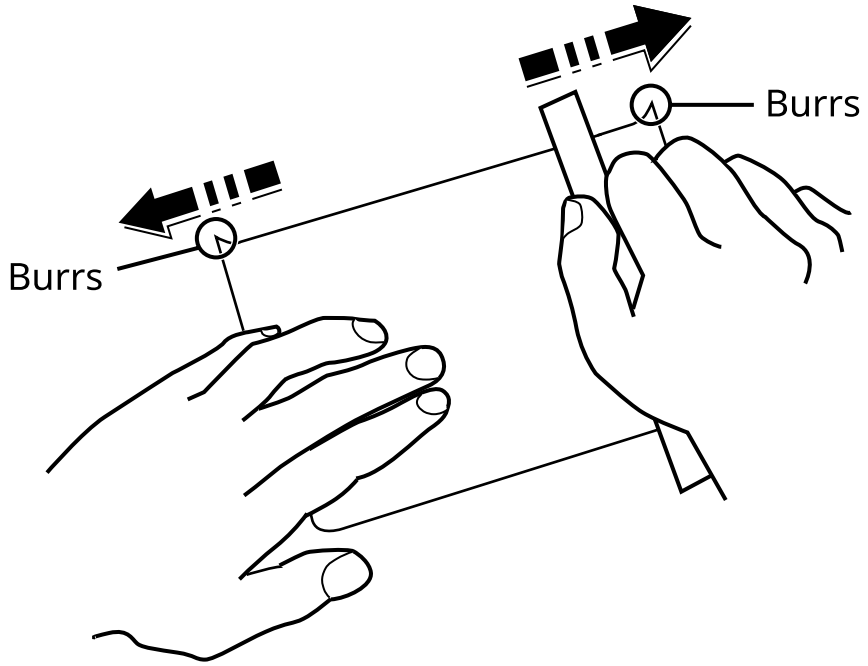

Before loading Hagaki (Cardstock) into the multipurpose tray, fan them and align the edges. If the Hagaki (Cardstock) paper is curled, straighten it before loading. Printing onto curled Hagaki (Cardstock) may cause jams.

Use unfolded Oufuku hagaki (Return postcard) (available at post offices). Some Hagaki (Cardstock) may still have rough edges developed by a paper cutter on the back side. Remove any such rough edges by placing the Hagaki (Cardstock) on a flat surface and rubbing the edges gently a few times with a ruler.

Envelopes

Envelopes should be fed from the MP tray with the print-side down or the cassette and the optional paper feeder with the print-side up.

NOTE

Do not load paper above the load limits located on the paper width guide of the cassette and the optional paper feeder.

Due to the structure of envelopes, printing evenly over the entire surface may not be possible in some cases. Thin envelopes in particular may be wrinkled by the machine in some cases as they pass through. Before purchasing envelopes in volume, try testing a sample to ensure the print quality.

Storing envelopes for a long period may cause them to become wrinkled. Thus, keep the package sealed until you are ready to use them.

Keep the following points in mind.

- Do not use envelopes with exposed adhesive. In addition, do not use the type of envelope in which the adhesive is exposed after the top layer is peeled off. Serious damage may be caused if the paper covering the adhesive comes off in the machine.
- Do not use envelopes with certain special features. For example, do not use envelopes with a grommet for winding a string to close the flap or envelopes with an open or film-covered window.
- If paper jams occur, load fewer envelopes at once.

Thick Paper

Before loading thick paper, fan it and align the edges. Some thick paper may still have rough edges developed by a paper cutter on the back side. Remove any such rough edges just as with Hagaki (Cardstock) by placing the paper on a flat surface and rubbing the edges gently a few times with a ruler. Printing onto paper with rough edges may cause jams.

NOTE

If the paper is not supplied correctly even after it is smoothed, load the paper with the leading edge raised a few millimeters.

Colored Paper

Colored paper must conform to the specifications.

➡ Basic Paper Specifications (page 445)

In addition, the pigments in the paper must be able to withstand the heat of printing (up to 200°C or 392°F).

Preprinted Paper

Preprinted paper must conform to the specifications

➡ Basic Paper Specifications (page 445)

The colored ink must be able to withstand the heat of printing. It must be resistant to silicone oil as well. Do not use paper with a treated surface such as glossy paper used for calendars.

Recycled Paper

Recycled paper must conform to the specifications; however, its whiteness may be considered separately.

➡ Basic Paper Specifications (page 445)

NOTE

Before purchasing recycled paper in volume, try testing a sample to ensure satisfactory print quality.

Coated Paper

Coated paper is created by treating the surface of the base paper with a coating that provides higher printing quality than plain paper. Coated paper is used for particularly high-quality printing.

The surface of high-quality or medium-quality paper is coated with special agents that improve ink adhesion by making the paper surface smoother. These agents are used either to coat both sides of the paper or just one side. The coated side appears slightly glossy.

IMPORTANT

When printing on coated paper in very humid environments, ensure that the paper is kept dry as moisture may cause sheets to stick together when they are fed into the machine. If printing in very humid environments, set coated paper for one sheet each.

Specifications

IMPORTANT

Specifications are subject to change without notice.

Machine

Item	Specifications
Model	ECOSYS PA2600cwx/ECOSYS PA2600cx/ECOSYS PA2101cwx/ECOSYS PA2101cx
Type	Desktop
Printing Method	Electrophotography by semiconductor laser
Paper Weight (Cassette)	60 to 163 g/m^2
Paper Weight (Multipurpose Tray)	60 to 220 g/m^2 230 g/m^2(HAGAKI)
Paper Type (Cassette)	Plain, Preprinted, Bond, Recycled, Rough, Letterhead, Color, Prepunched, Thick, High Quality, Custom 1 to 8 (Duplex: Same as duplex printing).
Paper Type (Multipurpose Tray)	Plain, Transparency (OHP Film), Preprinted, Bond, Recycled, Rough, Vellum, Letterhead, Color, Prepunched, Thick, High Quality, Labels, Envelope, Hagaki (Cardstock), Coated, Custom 1 to 8
Paper Size (Cassette)	A4, A5, A5-R, A6, B5, B6, Letter, Legal, 216×340 mm, Executive, Oficio II, 16K, Statement, Folio, ISO B5, Custom (105 × 148 to 216 × 356 mm)
Paper Size (Multipurpose Tray)	A4, A5, A5-R, A6, B5, B6, Letter, Legal, 216 × 340 mm, Executive, Oficio II, 16K, Statement, Statement-R, Folio, ISO B5, Envelope Monarch, Envelope #10, Envelope DL, Envelope C5, Envelope #9, Envelope #6 3/4, Hagaki (Cardstock), Oufukuhagaki (Return postcard), Youkei 2, Youkei 4, Nagagata 3, Nagagata 4, Younaga 3, Custom (70 × 148 to 216 × 356 mm), 216 × 340 mm
Printed Image Margin Width	4.2 mm
Warm-up Time (23°C/73.4°F, 60%)	**ECOSYS PA2600cwx/ECOSYS PA2600cx** 29 seconds or less (from power ON) **ECOSYS PA2101cwx/ECOSYS PA2101cx** 32 seconds or less (from power ON)
Warm-up Time (23°C/73.4°F, 60%)	**ECOSYS PA2600cwx/ECOSYS PA2600cx** 13 seconds or less (from sleep) **ECOSYS PA2101cwx/ECOSYS PA2101cx** 11 seconds or less (from sleep)
Paper Capacity (Cassette)	250 sheets (80 g/m^2, A4/Letter or smaller)
Paper Capacity (Multipurpose Tray)	50 sheets

Item	Specifications
Output Tray Capacity (Inner tray)	150 sheets (80 g/m^2)
Image Write System	Semiconductor laser and electrophotography
Image Memory	1 GB
Interface (Standard)	• Hi-Speed USB: 1 • Network Interface: 1 (10BASE-T/100BASE-TX/1000BASE-T) • Hi-Speed USB: 1 (USB flash memory slot)
Operating Environment (Temperature)	10 to 32.5°C
Operating Environment (Humidity)	10 to 80%
Operating Environment (Altitude)	3,500 m and below
Operating Environment (Brightness)	1,500 lux and below
Dimension (W × D × H)	410 x 410 x 457 mm
Weight (Without toner container)	21 kg/46.30 lb
Space Required (W × D) (when using multipurpose tray)	410 x 594 mm
Power Source	120 V AC, 60 Hz: 8.6 A 220-240 V AC, 50 Hz: 5.7 A
Power consumption in Off mode and network standby	The information is available at the website below. https://www.kyoceradocumentsolutions.eu/en/about-us/our-brand/environmental-policy.html
Options	➡ Option configuration (page 438)

Printer Function

Print Speed

ECOSYS PA2600cwx/ECOSYS PA2600cx

Paper Size	Black & White	Color
A4R/A5	26 sheets/min	26 sheets/min
Letter-R	27 sheets/min	27 sheets/min
Legal	22 sheets/min	22 sheets/min
B5R	21 sheets/min*1	21 sheets/min*1
A5R	21 sheets/min*1	21 sheets/min*1
A6R	21 sheets/min*1	21 sheets/min*1
16K	27 sheets/min	27 sheets/min

*1 14ppm after the 16th sheet

ECOSYS PA2101cwx/ECOSYS PA2101cx

Paper Size	Black & White	Color
A4R/A5	21 sheets/min	21 sheets/min
Letter-R	22 sheets/min	22 sheets/min
Legal	18 sheets/min	18 sheets/min
B5R	19 sheets/min*1	19 sheets/min*1
A5R	19 sheets/min*1	19 sheets/min*1
A6R	19 sheets/min*1	19 sheets/min*1
16K	22 sheets/min	22 sheets/min

*1 11ppm after the 16th sheet

Others

Item	Description
First Print Time (A4, feed from Cassette)	**Black & White** 9.5 seconds or less **Color** 10.5 seconds or less
Resolution	• Equivalent of 9600 dpi × 600 dpi • Equivalent of 1200 dpi × Equivalent of 1200 dpi
Operating System	• Windows 10 • Windows 11 • Windows Server 2016 • Mac OS X v10.9 or higher

Item	Description
Interface	• Hi-Speed USB: 1 • Network interface: 1 (10 BASE-T/100 BASE-TX/1000 BASE-T) • Wireless LAN Supported
Page Description Language	PRESCRIBE
Emulation	• PCL6 (PCL5c/PCL-XL) • KPDL3 (PostScript3 compatible) • OpenXPS • XPS • PDF

Paper Feeder (250-sheet)

Setting	Specifications
Paper Supply Method	Friction retard feeder Capacity 250 sheets (80 g/m^2) 1 cassette
Paper Size	A4, A5-R, B5, Letter, Legal, B6, Folio, 216 × 340 mm, Statement-R, Executive, Oficio II, 16K, ISO B5, Custom (92 × 162 to 216 × 356 mm)
Supported Paper	Paper thickness: 60 to 220 g/m^2 Media types: Plain, Recycled, Material
Dimensions (W × D × H)	410 × 447.5 × 147 mm / 16.15" × 17.62" × 5.79"
Weight	3.6 kg / 9.70 lb

Backing up your data

If the memory of this machine installed in the machine failed for any reason, the files in the box and various settings saved there will be deleted and cannot be restored. To prevent erasing data, make regular backups as follows.

- Take a backup using KYOCERA Net Viewer.

  ➡ Backing up your data using KYOCERA Net Viewer (page 465)

- Take a backup using Command Center RX.

  ➡ Backing up your data using Command Center RX (page 466)

Backing up your data using KYOCERA Net Viewer

Use KYOCERA Net Viewer to regularly back up the data below that is saved on the machine.

- System Settings
- Network Settings
- User List
- Document Box Settings (Except for the file in the Custom Box)

Backing up your data using Command Center RX

Use Command Center RX to regularly back up data saved in the Document Box to your PC.

1 Display the screen.

1. Launch your Web browser.
2. In the address or location bar, enter the machine's IP address or the host name.
   Click in the following order to check the machine's IP address and the host name.
   In the home screen [...] > [Device Information] > [Identification/Wired NW] > [Wired Network]
   Click the number or name of the Custom Box in which the document is stored.

2 Download Document

1. Select the document data you want to download to your PC.
   Only the data of one document can be downloaded at a time.
2. Click the [Download] icon. The selected document is displayed in [Selected Files].
3. Specify the [Image Quality] and [File Format] as needed.
4. Click [Download].

Security Quick Setup Function List

The functions configured in each level of Security Quick Setup are as follows. After selecting the security level, configure the security function according to your operating environment.

TLS

Level 1	Level 2	Level 3
On	On	On

Serverside Settings

The setting item which can be set or configured from Command Center RX.

TLS Version

Level 1	Level 2	Level 3
TLS1.2, TLS1.3	TLS1.2, TLS1.3	TLS1.2, TLS1.3

Effective Encryption

Level 1	Level 2	Level 3
3DES, AES, AES-GCM, CHACHA20/POLY1305	AES-GCM, AES, CHACHA20/POLY1305	AES-GCM, AES, CHACHA20/POLY1305

Hash

Level 1	Level 2	Level 3
SHA1, SHA-2(256/384)	SHA-2(256/384)	SHA-2(256/384)

IPP Security

Level 1	Level 2	Level 3
Secure Only (IPPS)	Secure Only (IPPS)	Secure Only (IPPS)

HTTP Security

Level 1	Level 2	Level 3
Secure Only (HTTPS)	Secure Only (HTTPS)	Secure Only (HTTPS)

Enhanced WSD Security

Level 1	Level 2	Level 3
Secure Only (Enhanced WSD over TLS)	Secure Only (Enhanced WSD over TLS)	Secure Only (Enhanced WSD over TLS)

Rest Security

Level 1	Level 2	Level 3
Secure (REST over TLS)	-	-

Clientside Settings

The setting item which can be set or configured from Command Center RX.

TLS Version

Level 1	Level 2	Level 3
TLS1.2, TLS1.3	TLS1.2, TLS1.3	TLS1.2, TLS1.3

Effective Encryption

Level 1	Level 2	Level 3
3DES, AES, AES-GCM, CHACHA20/POLY1305	AES-GCM, AES, CHACHA20/POLY1305	AES-GCM, AES, CHACHA20/POLY1305

Hash

Level 1	Level 2	Level 3
SHA1, SHA-2(256/384)	SHA-2(256/384)	SHA-2(256/384)

IPv4 Settings (Wired Network)

The setting item which can be set or configured from Command Center RX.

DNS over TLS

Level 1	Level 2	Level 3
Off	Auto	On

Certificate Auto Verification

Level 1	Level 2	Level 3
Expiration Date	Expiration Date	Expiration Date

Hash

Level 1	Level 2	Level 3
SHA-2(256/384)	SHA-2(256/384)	SHA-2(256/384)

IPv4 Settings (Wireless Network)

The setting item which can be set or configured from Command Center RX.

DNS over TLS

Level 1	Level 2	Level 3
Off	Auto	On

Certificate Auto Verification

Level 1	Level 2	Level 3
Expiration Date	Expiration Date	Expiration Date

Hash

Level 1	Level 2	Level 3
SHA-2(256/384)	SHA-2(256/384)	SHA-2(256/384)

IPv6 Settings (Wired Network)

The setting item which can be set or configured from Command Center RX.

DNS over TLS

Level 1	Level 2	Level 3
Off	Auto	On

Certificate Auto Verification

Level 1	Level 2	Level 3
Expiration Date	Expiration Date	Expiration Date

Hash

Level 1	Level 2	Level 3
SHA-2(256/384)	SHA-2(256/384)	SHA-2(256/384)

IPv6 Settings (Wireless Network)

The setting item which can be set or configured from Command Center RX.

DNS over TLS

Level 1	Level 2	Level 3
Off	Auto	On

Certificate Auto Verification

Level 1	Level 2	Level 3
Expiration Date	Expiration Date	Expiration Date

Hash

Level 1	Level 2	Level 3
SHA-2(256/384)	SHA-2(256/384)	SHA-2(256/384)

Other Protocols: HTTP (Client)

The setting item which can be set or configured from Command Center RX.

Certificate Auto Verification

Level 1	Level 2	Level 3
Expiration Date	Expiration Date	Expiration Date

Hash

Level 1	Level 2	Level 3
SHA-2(256/384)	SHA-2(256/384)	SHA-2(256/384)

Other Protocols: SOAP

The setting item which can be set or configured from Command Center RX.

Use Default Settings

Level 1	Level 2	Level 3
On	Expiration Date	Expiration Date

Other Protocols: LDAP

The setting item which can be set or configured from Command Center RX.

Use Default Settings

Level 1	Level 2	Level 3
Off	Expiration Date	Expiration Date

Send Protocols: SMTP (E-mail TX)

The setting item which can be set or configured from Command Center RX.

Certificate Auto Verification

Level 1	Level 2	Level 3
Expiration Date	Expiration Date	Expiration Date

Hash

Level 1	Level 2	Level 3
SHA-2(256/384)	SHA-2(256/384)	SHA-2(256/384)

Email: POP3 User Settings

The setting item which can be set or configured from Command Center RX.

Certificate Auto Verification

Level 1	Level 2	Level 3
Expiration Date	Expiration Date	Expiration Date

Hash

Level 1	Level 2	Level 3
SHA-2(256/384)	SHA-2(256/384)	SHA-2(256/384)

Print protocols

LPD

Level 1	Level 2	Level 3
On	On	Off

FTP (Receiving)

Level 1	Level 2	Level 3
On	Off	Off

IPP

Level 1	Level 2	Level 3
On	Off	Off

IPP over TLS

Level 1	Level 2	Level 3
On	On	On

Raw

Level 1	Level 2	Level 3
On	On	Off

ThinPrint

Level 1	Level 2	Level 3
On	Off	Off

NOTE

This is available if the optional application is enabled.

ThinPrint over TLS

Level 1	Level 2	Level 3
On	__*1	__*1

NOTE

This is available if the optional application is enabled.

*1 If you select [Level 2] or [Level 3] in "SecurityQuickSet", this setting will disappear.

WSD Print

Level 1	Level 2	Level 3
On	Off	Off

POP (E-mail RX)

Level 1	Level 2	Level 3
Off	Off	Off

Other Protocols

SNMPv1/v2c

Level 1	Level 2	Level 3
On	On	Off

SNMPv3

Level 1	Level 2	Level 3
Off	Off	Off

HTTP

Level 1	Level 2	Level 3
On	Off	Off

HTTPS

Level 1	Level 2	Level 3
On	On	On

Enhanced WSD

Level 1	Level 2	Level 3
On	Off	Off

Enhanced WSD (TLS)

Level 1	Level 2	Level 3
On	On	On

LDAP

Level 1	Level 2	Level 3
Off	Off	Off

LLTD

Level 1	Level 2	Level 3
Off	Off	Off

REST

Level 1	Level 2	Level 3
On	Off	Off

REST over TLS

Level 1	Level 2	Level 3
On	On	On

VNC (RFB)

Level 1	Level 2	Level 3
Off	Off	Off

VNC (RFB) over TLS

Level 1	Level 2	Level 3
Off	Off	Off

Enhanced VNC (RFB) over TLS

Level 1	Level 2	Level 3
On	Off	Off

TCP/IP: Bonjour Settings

Bonjour

Level 1	Level 2	Level 3
On	On	Off

Network Settings

Wi-Fi Direct Settings

Level 1	Level 2	Level 3
Off	Off	Off

Connectivity

Bluetooth Settings

Level 1	Level 2	Level 3
Off	Off	Off

Interface Block Setting

USB Host

Level 1	Level 2	Level 3
Unblock	Unblock	Block

USB Device

Level 1	Level 2	Level 3
Unblock	Unblock	Block

USB Drive

Level 1	Level 2	Level 3
Unblock	Unblock	Block

Energy Saver/Timer

Auto Panel Reset

Level 1	Level 2	Level 3
On	On	On

User Account Lockout Setting

Lockout

Level 1	Level 2	Level 3
Off	Off	On

Job Status/Job Logs Settings

Display Jobs Detail Status

Level 1	Level 2	Level 3
Show All	Show All	Hide All (Display only when Administrator

Display Jobs Log

Level 1	Level 2	Level 3
Show All	Show All	Hide All (Display only when Administrator

For the Kyocera contact in your region, see Sales Sites sections here.
https://www.kyoceradocumentsolutions.com/company/directory.html

©2024 KYOCERA Document Solutions Inc.
The Kyocera logo is a trademark of Kyocera Corporation.