IN SEARCH OF INCREDIBLE

ASUS Desktop PC

User Guide



D700TER/ S700TER/ D701TER/ M700TER/ D700TERES/ D700TERC

HDMI
HIGH-DEFINITION MULTIMEDIA INTERFACE

E24147
Revised Edition V3
February 2025

Copyright © 2025 ASUSTeK Computer Inc. All Rights Reserved.

No part of this manual, including the products and software described in it, may be reproduced, transmitted, transcribed, stored in a retrieval system, or translated into any language in any form or by any means, except documentation kept by the purchaser for backup purposes, without the express written permission of ASUSTeK Computer Inc. ("ASUS").

Product warranty or service will not be extended if: (1) the product is repaired, modified or altered, unless such repair, modification of alteration is authorized in writing by ASUS; or (2) the serial number of the product is defaced or missing.

ASUS PROVIDES THIS MANUAL "AS IS" WITHOUT WARRANTY OF ANY KIND, EITHER EXPRESS OR IMPLIED, INCLUDING BUT NOT LIMITED TO THE IMPLIED WARRANTIES OR CONDITIONS OF MERCHANTABILITY OR FITNESS FOR A PARTICULAR PURPOSE. IN NO EVENT SHALL ASUS, ITS DIRECTORS, OFFICERS, EMPLOYEES OR AGENTS BE LIABLE FOR ANY INDIRECT, SPECIAL, INCIDENTAL, OR CONSEQUENTIAL DAMAGES (INCLUDING DAMAGES FOR LOSS OF PROFITS, LOSS OF BUSINESS, LOSS OF USE OR DATA, INTERRUPTION OF BUSINESS AND THE LIKE), EVEN IF ASUS HAS BEEN ADVISED OF THE POSSIBILITY OF SUCH DAMAGES ARISING FROM ANY DEFECT OR ERROR IN THIS MANUAL OR PRODUCT.

SPECIFICATIONS AND INFORMATION CONTAINED IN THIS MANUAL ARE FURNISHED FOR INFORMATIONAL USE ONLY, AND ARE SUBJECT TO CHANGE AT ANY TIME WITHOUT NOTICE, AND SHOULD NOT BE CONSTRUED AS A COMMITMENT BY ASUS. ASUS ASSUMES NO RESPONSIBILITY OR LIABILITY FOR ANY ERRORS OR INACCURACIES THAT MAY APPEAR IN THIS MANUAL, INCLUDING THE PRODUCTS AND SOFTWARE DESCRIBED IN IT.

Products and corporate names appearing in this manual may or may not be registered trademarks or copyrights of their respective companies, and are used only for identification or explanation and to the owners' benefit, without intent to infringe.

SERVICE AND SUPPORT

Visit our multi-language website at https://www.asus.com/support/.

Contents

Notices 5
Safety information 14
Conventions used in this guide 15
Where to find more information 15
Package contents 16

Chapter 1 Getting started

Welcome! 17
Getting to know your computer 17
Setting up your computer 28
Turning your computer ON 30
Enabling fast startup 31

Chapter 2 Connecting devices to your computer

Connecting a USB storage device 33
Connecting microphone and speakers 34
Changing to the external audio output 37
Connecting multiple external displays 38
Connecting an HDTV 39

Chapter 3 Using your computer

Proper posture when using your Desktop PC 41
Using the memory card reader (Optional) 42
Using the optical drive (Optional) 43
Configuring the USB ports using the BIOS 44
Configuring the HDD security setting using the BIOS 45
Configuring the Keyboard/Mouse using the BIOS (on selected models only) 46

Chapter 4 Connecting to the Internet

Wired connection 47
Installing the Wi-Fi antenna 51

Chapter 5 Using ASUS Business Manager

ASUS Business Manager 53

Chapter 6 Troubleshooting

Troubleshooting 55

Appendix Working with Windows®

Starting for the first time 63
Start menu 63
Windows® apps 64
Connecting to wireless networks 64
Connecting to wired networks 65
Turning your computer off 65
Putting your computer to the Off mode with fast startup enabled 65
Putting your computer to the lowest power mode 66
Putting your computer to sleep 66

Notices

ASUS Recycling/Takeback Services

ASUS recycling and takeback programs come from our commitment to the highest standards for protecting our environment. We believe in providing solutions for you to be able to responsibly recycle our products, batteries, other components, as well as the packaging materials. Please go to https://esg.asus.com/en/Takeback.htm for the detailed recycling information in different regions.

REACH

Complying with the REACH (Registration, Evaluation, Authorisation, and Restriction of Chemicals) regulatory framework, we published the chemical substances in our products at ASUS REACH website at https://esg.asus.com/Compliance.htm.

Federal Communications Commission Statement

This device complies with Part 15 of the FCC Rules. Operation is subject to the following two conditions:

- This device may not cause harmful interference; and
- This device must accept any interference received including interference that may cause undesired operation.

This equipment has been tested and found to comply with the limits for a Class B digital device, pursuant to Part 15 of the FCC Rules. These limits are designed to provide reasonable protection against harmful interference in a residential installation. This equipment generates, uses and can radiate radio frequency energy and, if not installed and used in accordance with manufacturer's instructions, may cause harmful interference to radio communications. However, there is no guarantee that interference will not occur in a particular installation. If this equipment does cause harmful interference to radio or television reception, which can be determined by turning the equipment off and on, the user is encouraged to try to correct the interference by one or more of the following measures:

- Reorient or relocate the receiving antenna.
- Increase the separation between the equipment and receiver.
- Connect the equipment to an outlet on a circuit different from that to which the receiver is connected.
- Consult the dealer or an experienced radio/TV technician for help.

FCC RF Exposure information

This equipment must be installed and operated in accordance with provided instructions and the antenna(s) used for this transmitter must be installed to provide a separation distance of at least 20 cm from all persons and must not be co-located or operating in conjunction with any other antenna or transmitter. End-users and installers must be provided with antenna installation instructions and transmitter operating conditions for satisfying.

FCC RF Caution Statement

WARNING: Any changes or modifications not expressly approved by the party responsible for compliance could void your authority to operate the equipment.

FCC WiFi 6E Caution Statement

FCC regulations restrict the operation of this device to indoor use only. The operation of this device is prohibited on oil platforms, cars, trains, boats, and aircraft, except that operation of this device is permitted in large aircraft while flying above 10,000 feet.

The use of shielded cables for connection of the monitor to the graphics card is required to assure compliance with FCC regulations. Changes or modifications to this unit not expressly approved by the party responsible for compliance could void the user's authority to operate this equipment.

Lithium Battery Warning

CAUTION: Danger of explosion if battery is incorrectly replaced. Replace only with the same or equivalent type recommended by the manufacturer. Dispose of used batteries according to the manufacturer's instructions.

Avertissement relatif aux batteries Lithium

ATTENTION ! Danger d'explosion si la batterie n'est pas correctement remplacée. Remplacer uniquement avec une batterie de type semblable ou équivalent, recommandée par le fabricant. Jeter les batteries usagées conformément aux instructions du fabricant.

Compliance Statement of Innovation, Science and Economic Development Canada (ISED)

This device complies with Innovation, Science, and Economic Development Canada licence exempt RSS standard(s). Operation is subject to the following two conditions: (1) this device may not cause interference, and (2) this device must accept any interference, including interference that may cause undesired operation of the device:

Operation in the band 5150–5250 MHz is only for indoor use to reduce the potential for harmful interference to co-channel mobile satellite systems.

CAN ICES-003(B)/NMB-003(B)

Déclaration de conformité de Innovation, Sciences et Développement économique Canada (ISED)

Le présent appareil est conforme aux CNR d'Innovation, Sciences et Développement économique Canadaapplicables aux appareils radio exempts de licence. L'exploitation est autorisée aux deux conditions suivantes : (1) l'appareil ne doit pas produire de brouillage, et (2) l'utilisateur de l'appareil doit accepter tout brouillage radioélectrique subi, même si le brouillage est susceptible d'en compromettre le fonctionnement.

La bande 5150 – 5250 MHz est réservée uniquement pour une utilisation à l'intérieur afin de réduire les risques de brouillage préjudiciable aux systèmes de satellites mobiles utilisant les mêmes canaux.

CAN ICES-003(B)/NMB-003(B)

IC: Canadian Compliance Statement

Complies with the Canadian ICES-003 Class B specifications. This device complies with RSS 210 of Industry Canada. This Class B device meets all the requirements of the Canadian interference-causing equipment regulations.

This device complies with Industry Canada license exempt RSS standard(s). Operation is subject to the following two conditions: this device may not cause interference, and (2) this device must accept any interference, including interference that may cause undesired operation of the device.

Déclaration de conformité d'Industrie Canada

Cet appareil numérique de la classe B est conforme à la norme NMB-003 du Canada. Cet appareil numérique de la classe B respecte toutes les exigences du Règlement sur le matériel brouilleur du Canada.

Le présent appareil est conforme aux normes CNR d'Industrie Canada applicables aux appareils radio exempts de licence. Son utilisation est sujette aux deux conditions suivantes : (1) cet appareil ne doit pas créer d'interférences et (2) cet appareil doit tolérer tout type d'interférences, y compris celles susceptibles de provoquer un fonctionnement non souhaité de l'appareil.

ISED Wi-Fi 6E Caution Statement (RLAN devices)

Devices shall not be used for control of or communications with unmanned aircraft systems.

Les dispositifs ne doivent pas être utilisés pour commander des systèmes d'aéronef sans pilote ni pour communiquer avec de tels systèmes.

Canadian Department of Communications Statement

This digital apparatus does not exceed the Class B limits for radio noise emissions from digital apparatus set out in the Radio Interference Regulations of the Canadian Department of Communications.

This class B digital apparatus complies with Canadian ICES-003.

Déclaration du Département Canadien des Communications

Cet appareil numérique ne dépasse pas les limites de classe B en terme d'émissions de nuisances sonores, par radio, par des appareils numériques, et ce conformément aux régulations d'interférence par radio établies par le département canadien des communications.

Cet appareil numérique de la classe B est conforme à la norme NMB-003 du Canada.

VCCI: Japan Compliance Statement

VCCI Class B Statement

この装置は、クラスB情報技術装置です。この装置は、家庭環境で使用することを目的としていますが、この装置がラジオやテレビジョン受信機に近接して使用されると、受信障害を引き起こすことがあります。

取扱説明書に従って正しい取り扱いをして下さい。

This is a Class B product based on the standard of the VCCI Council. If this is used near a radio or television receiver, it may cause radio interference. Install and use equipment according to the instruction manual.

Equipment registered based on the confirmation measurement at the user installation site.

この装置は、現在設置されている場所で妨害波の測定がされた情報技術装置であり、ＶＣＣＩ協会の基準に適合しています。

従って、現在設置されている場所以外で使用する場合は、再び妨害波を測定し、ＶＣＣＩに届け出をしなければなりません。

This is a product for which interference was measured at the present installation site and confirmed to comply with the standard of Voluntary Control Council for Interference by Information Technology Equipment (VCCI). Before using the equipment at any location other than the present installation site, the member shall measure interference for confirmation and register the result to VCCI.

India E-Waste (Management) Rules 2016

This product complies with the "India E-Waste (Management) Rules, 2016" and prohibits use of lead, mercury, hexavalent chromium, polybrominated biphenyls (PBBs) and polybrominated diphenyl ethers (PBDEs) in concentrations exceeding 0.1% by weight in homogenous materials and 0.01 % by weight in homogenous materials for cadmium, except for the exemptions listed in Schedule II of the Rule.

KC: Korea Warning Statement

B급 기기 (가정용 방송통신기자재)
이 기기는 가정용(B급) 전자파적합기기로서 주로 가정에서 사용하는 것을 목적으로 하며, 모든 지역에서 사용할 수 있습니다.

*당해 무선설비는 전파혼신 가능성이 있으므로 인명안전과 관련된 서비스는 할 수 없습니다.

RF Equipment Notices

CE: European Community Compliance Statement

The equipment complies with the RF Exposure Requirement 1999/519/EC, Council Recommendation of 12 July 1999 on the limitation of exposure of the general public to electromagnetic fields (0–300 GHz).

Wireless Radio Use

This device is restricted to indoor use when operating in the 5.15 to 5.25 GHz frequency band.

Exposure to Radio Frequency Energy

The radiated output power of the Wi-Fi technology is below the FCC radio frequency exposure limits. Nevertheless, it is advised to use the wireless equipment in such a manner that the potential for human contact during normal operation is minimized.

FCC Bluetooth Wireless Compliance

The antenna used with this transmitter must not be colocated or operated in conjunction with any other antenna or transmitter subject to the conditions of the FCC Grant.

Bluetooth Industry Canada Statement

This Class B device meets all requirements of the Canadian interference-causing equipment regulations.

Cet appareil numérique de la Class B respecte toutes les exigences du Règlement sur le matériel brouilleur du Canada.

NCC: Wireless Statement

低功率射頻器材技術規範

「取得審驗證明之低功率射頻器材，非經核准，公司、商號或使用者均不得擅自變更頻率、加大功率或變更原設計之特性及功能。低功率射頻器材之使用不得影響飛航安全及干擾合法通信；經發現有干擾現象時，應立即停用，並改善至無干擾時方得繼續使用。前述合法通信，指依電信管理法規定作業之無線電通信。低功率射頻器材須忍受合法通信或工業、科學及 醫療用電波輻射性電機設備之干擾。」

* 應避免影響附近雷達系統之操作。

Japan RF Equipment Statement

この製品は、周波数帯域5.15～5.35GHzで動作しているときは、屋内においてのみ使用可能です。

KC (RF Equipment)

대한민국 규정 및 준수
방통위고시에 따른 고지사항
해당 무선설비는 운용 중 전파혼신 가능성이 있음,
이 기기는 인명안전과 관련된 서비스에 사용할 수 없습니다.

Simplified EU Declaration of Conformity

ASUSTek Computer Inc. hereby declares that this device is in compliance with the essential requirements and other relevant provisions of Directive 2014/53/EU. Full text of EU declaration of conformity is available at https://www.asus.com/support/.

The Wi-Fi operating in the band 5150-5350MHz shall be restricted to indoor use for countries listed in the table below:

AT	BE	BG	CZ	DK	EE	FR
DE	IS	IE	IT	EL	ES	CY
LV	LI	LT	LU	HU	MT	NL
NO	PL	PT	RO	SI	SK	TR
FI	SE	CH	HR	UK(NI)		

CE

CE RED RF Output table

Intel® AX211NGW

a. Low power indoor (LPI) Wi-Fi 6E devices:

The device is restricted to indoor use only when operating in the 5945 to 6425 MHz frequency ranges in Belgium (BE), Bulgaria (BG), Cyprus (CY), Czech Republic (CZ), Estonia (EE), France (FR), Iceland (IS), Ireland (IE), Lithuania (LT), Germany (DE), Netherlands (NL), Spain (ES).

b. Very Low Power (VLP) Wi-Fi 6E devices (portable devices):

The device is not permitted used on Unmanned Aircraft Systems (UAS) when operating in the 5945 to 6425MHz frequency range Belgium (BE), Bulgaria (BG), Cyprus (CY), Czech Republic (CZ), Estonia (EE), France (FR), Iceland (IS), Ireland (IE), Lithuania (LT), Germany (DE), Netherlands (NL), Spain (ES).

Intel® AX211NGW

Function	Frequency	Maximum Output Power (EIRP)
WiFi	2412 - 2472 MHz	18 dBm
	5150 - 5350 MHz	21 dBm
	5470 - 5725 MHz	21dBm
	5725 - 5850 MHz	13 dBm
	5945 - 6425 MHz	21dBm
Bluetooth	2402 - 2480 MHz	11 dBm

* Receiver category 1

Intel® AX201NGW

Function	Frequency	Maximum Output Power (EIRP)
WIFI	2412 - 2472 MHz	19 dBm
	5150 - 5350 MHz	20 dBm
	5470 - 5725 MHz	20 dBm
	5725 - 5850 MHz	9 dBm
Bluetooth	2402 - 2480 MHz	11 dBm

* Receiver category 1

Intel® AX101NGW

Function	Frequency	Maximum Output Power (EIRP)
WIFI	2412 - 2472 MHz	18 dBm
	5150 - 5350 MHz	20 dBm
	5470 - 5725 MHz	20 dBm
	5725 - 5850 MHz	8 dBm
Bluetooth	2402 - 2480 MHz	12 dBm

* Receiver category 1

Simplified UKCA Declaration of Conformity

ASUSTek Computer Inc. hereby declares that this device is in compliance with the essential requirements and other relevant provisions of The Radio Equipment Regulations 2017 (S.I. 2017/1206). Full text of UKCA declaration of conformity is available at https://www.asus.com/support/.

The Wi-Fi operating in the band 5150-5350MHz shall be restricted to indoor use for the country listed below:

UK

UKCA RF Output table

Intel® AX211NGW

a. Low Power Indoor (LPI) Wi-Fi 6E devices:
The device is restricted to indoor use only when operating in the 5925 to 6425 MHz frequency range in UK.

b. Very Low Power (VLP) Wi-Fi 6E devices (portable devices):
The device is not permitted to be used on Unmanned Aircraft Systems (UAS) when operating in the 5925 to 6425 MHz frequency range in UK.

Intel® AX211NGW

Function	Frequency	Maximum Output Power (EIRP)
WiFi	2412 - 2472 MHz	18 dBm
	5150 - 5350 MHz	21 dBm
	5470 - 5725 MHz	21dBm
	5725 - 5850 MHz	13 dBm
	5945 - 6425 MHz	21dBm
Bluetooth	2402 - 2480 MHz	11 dBm

* Receiver category 1

Intel® AX201NGW

Function	Frequency	Maximum Output Power (EIRP)
WIFI	2412 - 2472 MHz	19 dBm
	5150 - 5350 MHz	20 dBm
	5470 - 5725 MHz	20 dBm
	5725 - 5850 MHz	9 dBm
Bluetooth	2402 - 2480 MHz	11 dBm

* Receiver category 1

Intel® AX101NGW

Function	Frequency	Maximum Output Power (EIRP)
WIFI	2412 - 2472 MHz	18 dBm
	5150 - 5350 MHz	20 dBm
	5470 - 5725 MHz	20 dBm
	5725 - 5850 MHz	8 dBm
Bluetooth	2402 - 2480 MHz	12 dBm

* Receiver category 1

ENERGY STAR® Qualified Product

ENERGY STAR® is a joint program of the U.S. Environmental Protection Agency and the U.S. Department of Energy helping us all save money and protect the environment through energy efficient products and practices.

All ASUS products with the ENERGY STAR® logo comply with the ENERGY STAR® standard, and the power management feature is enabled by default. The monitor is automatically set to sleep within 10 minutes of user inactivity; the computer is automatically set to sleep within 30 minutes of user inactivity. To wake your computer, click the mouse, press any key on the keyboard, or press the power button.

Please visit https://www.energystar.gov for detailed information on the ENERGY STAR® joint program, power management, and the benefits to the environment.

*Note: ENERGY STAR® is NOT supported on Freedos and Linux-based products.

HEVC Advance™
Covered by patents at patentlist.accessadvance.com

Optical Drive Safety Information

Laser Safety Information

CLASS 1 CONSUMER LASER PRODUCT

EN 50689:2021



WARNING! To prevent exposure to the optical drive's laser, do not attempt to disassemble or repair the optical drive by yourself. For your safety, contact a professional technician for assistance.

Service warning label



WARNING! INVISIBLE LASER RADIATION WHEN OPEN. DO NOT STARE INTO BEAM OR VIEW DIRECTLY WITH OPTICAL INSTRUMENTS.

CDRH Regulations

The Center for Devices and Radiological Health (CDRH) of the U.S. Food and Drug Administration implemented regulations for laser products on August 2, 1976. These regulations apply to laser products manufactured from August 1, 1976. Compliance is mandatory for products marketed in the United States.



WARNING! Use of controls or adjustments or performance of procedures other than those specified herein or in the laser product installation guide may result in hazardous radiation exposure.

Safety information

Disconnect the AC power and peripherals before cleaning. Wipe the Desktop PC using a clean cellulose sponge or chamois cloth dampened with solution of nonabrasive detergent and a few drops of warm water then remove any extra moisture with a dry cloth.

- **DO NOT** place on uneven or unstable work surfaces. Seek servicing if the casing has been damaged.
- **DO NOT** expose to dirty or dusty environments. **DO NOT** operate during a gas leak.
- **DO NOT** place or drop objects on top and do not shove any foreign objects into the Desktop PC.
- **DO NOT** expose to strong magnetic or electrical fields.
- **DO NOT** expose to or use near liquids, rain, or moisture. **DO NOT** use the modem during electrical storms.
- Battery safety warning: **DO NOT** throw the battery in fire. **DO NOT** short circuit the contacts. **DO NOT** disassemble the battery.
- Use this product in environments with ambient temperatures between 5˚C (41˚F) and 35˚C (95˚F).
- **DO NOT** cover the vents on the Desktop PC to prevent the system from getting overheated.
- **DO NOT** use damaged power cords, accessories, or other peripherals.
- To prevent electrical shock hazard, disconnect the power cable from the electrical outlet before relocating the system.
- Seek professional assistance before using an adapter or extension cord. These devices could interrupt the grounding circuit.
- Ensure that your power supply is set to the correct voltage in your area. If you are not sure about the voltage of the electrical outlet you are using, contact your local power company.
- If the power supply is broken, do not try to fix it by yourself. Contact a qualified service technician or your retailer.
- The Desktop PC is non-portable.



"Do not ingest battery, Chemical Burn Hazard"

This product contains a coin / button cell battery. If the coin / button cell battery is swallowed, it can cause severe internal burns in just 2 hours and can lead to death.

Keep new and used batteries away from children.

If the battery compartment does not close securely, stop using the product and keep it away from children.

If you think batteries might have been swallowed or placed inside any part of the body, seek immediate medical attention.



Hazardous moving parts. Desktop should be completely shutdown before servicing product. Replacing fan components should only be attempted by qualified service personnel.

Hazardous Moving Parts Warning

WARNING: Keep fingers and other body parts away from any moving parts.



CAUTION: DO NOT loosen the thumb screws to access the internal area of your device. If service or repair is required, return your device to an authorized service center.



WARNING! Hot Internal replaceable parts and iron parts may cause burns.

Conventions used in this guide

To ensure that you perform certain tasks properly, take note of the following symbols used throughout this manual.



DANGER/WARNING: Information to prevent injury to yourself when trying to complete a task.



CAUTION: Information to prevent damage to the components when trying to complete a task.



IMPORTANT: Instructions that you MUST follow to complete a task.



NOTE: Tips and additional information to help you complete a task.

Where to find more information

Refer to the following sources for additional information and for product and software updates.

ASUS website

The ASUS website provides updated information on ASUS hardware and software products. Refer to the ASUS website www.asus.com.

ASUS Local Technical Support

Visit ASUS website at https://www.asus.com/support/contact for the contact information of local Technical Support Engineer.

Package contents

	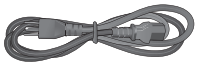	
ASUS Desktop PC	Power cord x1	Support DVD x1
		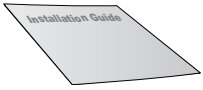
Recovery DVD x1 (Optional)	ASUS mouse pad x 1 (Optional)	Installation Guide x1
		
Warranty card x1		

- If any of the above items is damaged or missing, contact your retailer.
- The illustrated items above are for reference only. Actual product specifications may vary with different models.

Chapter 1
Getting started

Welcome!

Thank you for purchasing the ASUS Desktop PC!

The ASUS Desktop PC provides cutting-edge performance, uncompromised reliability, and user-centric utilities. All these values are encapsulated in a stunningly futuristic and stylish system casing.



Read the ASUS Warranty Card before setting up your ASUS Desktop PC.



- The Desktop PC does not support Windows® 7 operating system. ASUS is not responsible for any loss or damage incurred by installing Windows® 7.
- Be careful when handling the desktop PC to prevent the risk of injury.

Getting to know your computer



Illustrations are for reference only. The ports and their locations, and the chassis color vary with different models.



IMPORTANT! Do not use this Desktop PC for cryptocurrency mining (consuming a vast amount of electricity and time to gain convertible virtual currency) and/or related activities.

Front panel

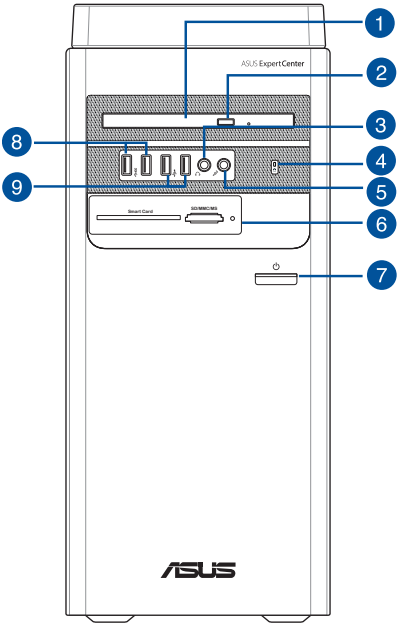

1. **5.25 inch optical disk drive bay (optional).** There is an optical disk drive in this bay.
2. **Optical disk drive eject button (optional).** Press this button to eject the optical disk drive tray.
3. **Headphone port (black).** This port connects to a headphone or speaker.
4. **HDD indicator.** The LED lights up or blinks to indicate the status of the HDD.
5. **Microphone port (black).** This port connects to a microphone.
6. **IC smart card reader & SD card reader (optional).** Insert a smart card or SD card into the appropriate slot.
7. **Power button.** Press this button to turn on your computer.
8. **USB 3.2 Gen 1 + USB Type C® (optional) / USB 3.2 Gen 1 ports.** These USB 3.2 Gen 1 + USB Type C® (optional) / USB 3.2 Gen 1 ports connect to USB 3.2 Gen 1 + USB Type C® (optional) / USB 3.2 Gen 1devices such as a mouse, printer, scanner, camera, PDA, and others.



The output voltage of USB 3.2 Gen 1 Type C® port is 5V, 1.5A.

9. **USB 2.0 ports.** These Universal Serial Bus 2.0 (USB 2.0) ports connect to USB 2.0 devices such as a mouse, printer, scanner, camera, PDA, and others.

Rear panel

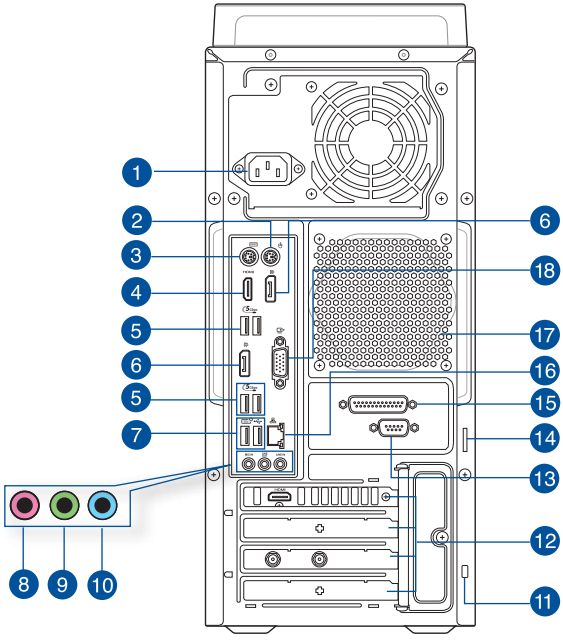

1. **Power connector.** Plug the power cord to this connector.

RATING:	115/230Vac, 50/60Hz, 6A/3A (WW)
	115Vac, 60Hz, 6A (TW)
	220Vac, 50Hz, 3A (Chinese Mainland)

2. **PS/2 mouse port (green)**. This port is for a PS/2 mouse.
3. **PS/2 keyboard port (purple)**. This port is for a PS/2 keyboard.
4. **HDMI™ port.** This port is for a High-Definition Multimedia Interface (HDMI™) connector, and is HDCP compliant allowing playback of HD DVD, Blu-ray, and other protected content.
5. **USB 3.2 Gen 1 ports.** The Universal Serial Bus 3.2 Gen 1 (USB 3.2 Gen 1) ports connect to USB 3.2 Gen 1 devices such as a mouse, printer, scanner, camera, PDA, and others.
6. **DisplayPorts**. These ports are for DisplayPort-compatible devices.
7. **USB 2.0 ports.** These Universal Serial Bus 2.0 (USB 2.0) ports connect to USB 2.0 devices such as a mouse, printer, scanner, camera, PDA, and others.

When USB Wake is enabled in the BIOS, the system will turn on or wake from hibernation when a USB mouse or keyboard connected to this port is used. (This option is disabled by default.)

8. **Microphone port (pink).** This port connects to a microphone.
9. **Line Out port (lime).** This port connects to a headphone or speaker. In a 4, 5.1, or 7.1-channel configuration, the function of this port becomes Front Speaker Out.
10. **Line In port (light blue).** This port connects to a tape, CD, DVD player, or other audio sources.

Refer to the audio configuration table below for the function of the audio ports in the 2, 4, 5.1, or 7.1-channel configuration.

Audio 2, 4, 5.1, or 7.1-channel configuration

Port	Headset 2-channel	4-channel	5.1-channel	7.1-channel
Light Blue (Rear panel)	Line In	Rear Speaker Out	Rear Speaker Out	Rear Speaker Out
Lime (Rear panel)	Line Out	Front Speaker Out	Front Speaker Out	Front Speaker Out
Pink (Rear panel)	Mic In	Mic In	Bass/Center	Bass/Center
Lime (Front panel)	-	-	-	Side Speaker Out

11. **Kensington® lock slot.** The Kensington® lock slot allows the PC to be secured using Kensington® compatible PC security cables.
12. **Expansion slot brackets.** Remove the expansion slot bracket when installing an expansion card.

- PCIEX16_1 slot supports graphics cards and storage devices only while other PCIE slots support storage devices and other PCIe devices.
- Install the primary graphics card in PCIEX16_1 if you use two graphics cards.

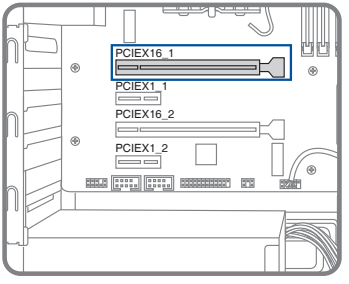

- ASUS Graphics Card is available on selected models. The display output ports on the optional ASUS Graphics Card may vary with different models.
- Refer to ***Installing a graphics card in your computer*** for detailed instructions.

13. **Serial port (optional).** This 9-pin COM port is for pointing devices or other serial devices.
14. **Pad lock slot.** This pad lock slot allows your PC to be secured using a standard pad lock.
15. **Parallel port (optional).** This 25-pin port connects a parallel printer, a scanner, or other devices.
16. **LAN (RJ-45) port.** This port allows Gigabit connection to a Local Area Network (LAN) through a network hub.

LAN port LED indications

Activity/Link LED		Speed LED	
Status	Description	Status	Description
OFF	No link	OFF	10Mbps connection
ORANGE	Linked	ORANGE	100Mbps connection
BLINKING	Data activity	GREEN	1Gbps connection

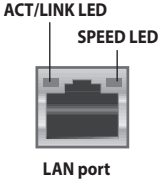

17. **Air vents.** These vents allow air ventilation.

DO NOT block the air vents on the chassis. Always provide proper ventilation for your computer.

18. **VGA port.** This port is for VGA-compatible devices such as a VGA monitor. Your desktop PC is equipped with an additional graphics card, and this VGA port is disabled by default.

Installing memory in your computer

This desktop PC comes with four Double Data Rate 5 (DDR5) Dual Inline Memory Module (DIMM) sockets. The figure illustrates the location of the DDR5 DIMM sockets.

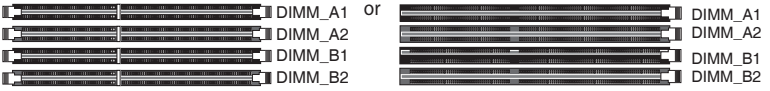

Channel	Sockets
Channel A	DIMM_A1 & DIMM_A2
Channel B	DIMM_B1 & DIMM_B2

Recommended memory configurations

- Follow the installation sequence below to ensure system stability and avoid possible booting up failure.

	DIMM_A1	DIMM_A2	DIMM_B1	DIMM_B2
1 x DIMM	x	√	x	x
2 x DIMM	x	√	x	√
3 x DIMM	√	√	x	√
4 x DIMM	√	√	√	√

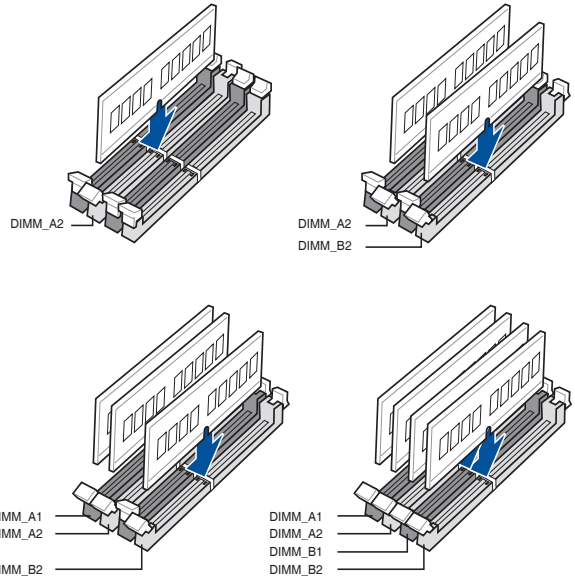

or

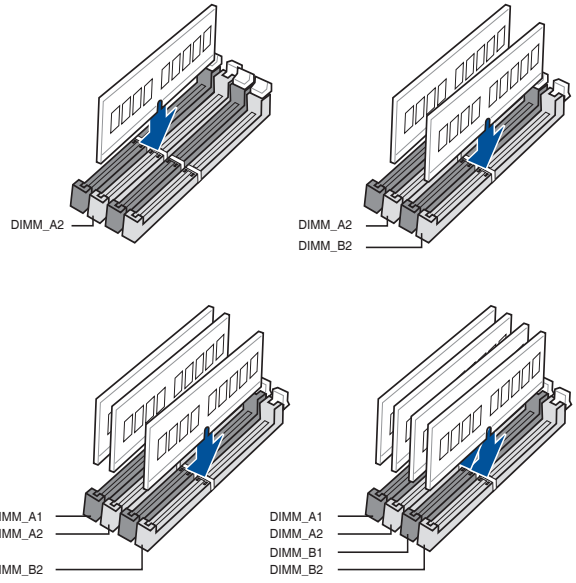

- Install DIMMs with the same capacity from the same manufacturer in the slots of the same channel.

Single memory capacity / Total memory capacity	DIMM_A1	DIMM_A2	DIMM_B1	DIMM_B2
4GB		4GB		
8GB		8GB		
8GB		4GB		4GB
12GB	4GB	4GB		4GB
16GB		16GB		
16GB		8GB		8GB
16GB	4GB	4GB	4GB	4GB
24GB	8GB	8GB		8GB
32GB		32GB		
32GB		16GB		16GB
32GB	8GB	8GB	8GB	8GB
48GB	16GB	16GB		16GB
64GB		32GB		32GB
64GB	16GB	16GB	16GB	16GB
96GB	32GB	32GB		32GB
128GB	32GB	32GB	32GB	32GB

Installing memory in your computer

To install memory in your computer:

1. Turn off your computer.
2. Unplug all cables from your computer.
3. Open your computer case.
4. Remove the graphics card.
5. Locate an empty DIMM socket.
6. Press down and outward on the DIMM ejector(s) to unlock the DIMM socket.

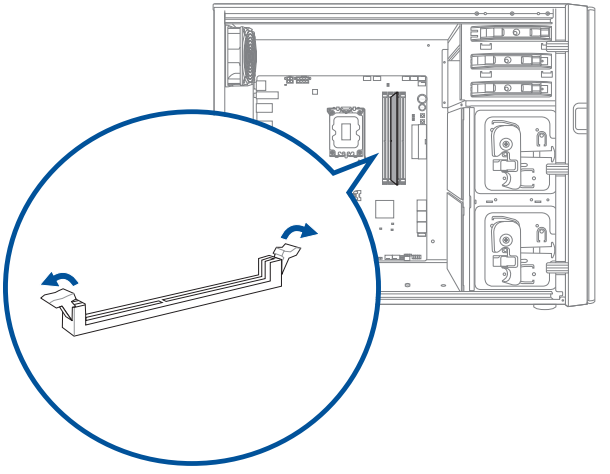

or

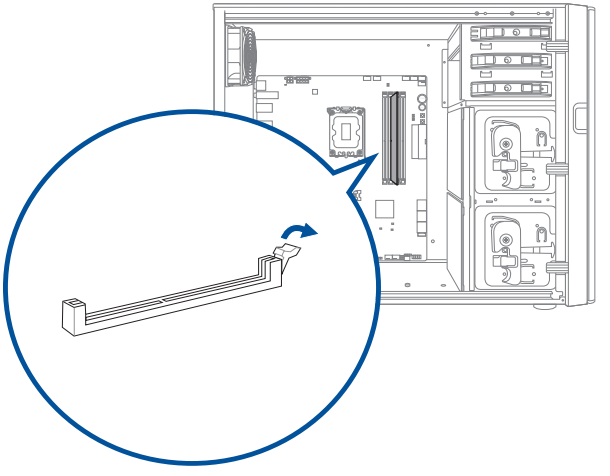

7. Align the notch on the bottom edge of the DIMM with the key of the DIMM socket, and then firmly insert the DIMM into the socket until the ejector(s) snap(s) back into place.

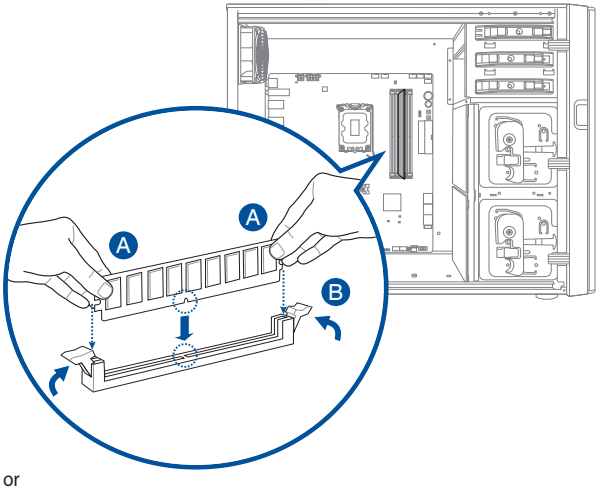

or

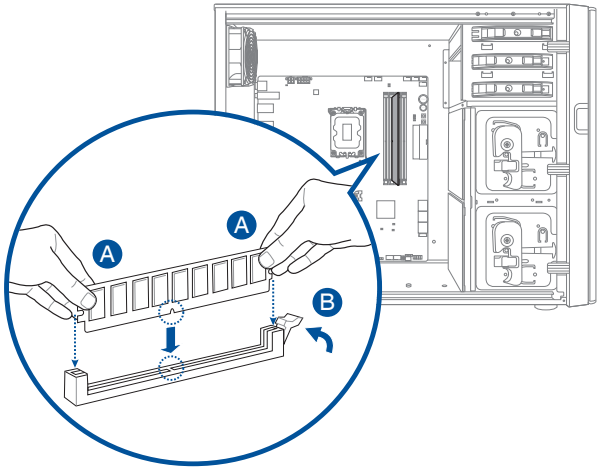

8. Install the graphics card.
9. Close your computer case.

The above pictures are for reference only. The inner structure of the desktop PC may vary.

Installing a graphics card in your computer

To install a graphics card in your computer:

1. Turn off your computer.
2. Unplug all cables from your computer.
3. Open your computer case and locate PCIEX16_1 slot if you are installing the first or the primary graphics card.
4. Align the notch on your graphics card with the key of the slot, and then insert the card into the slot.

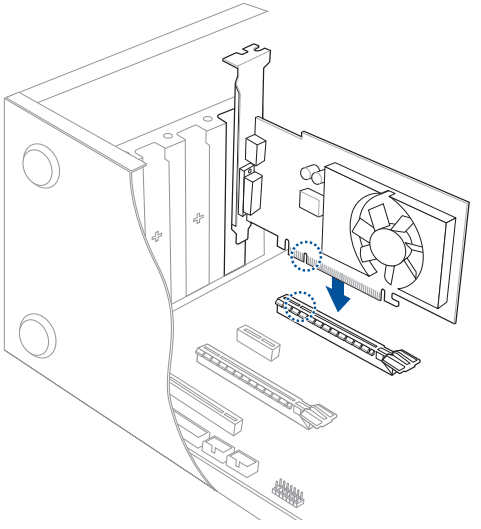

5. The ejector will snap back into place automatically.

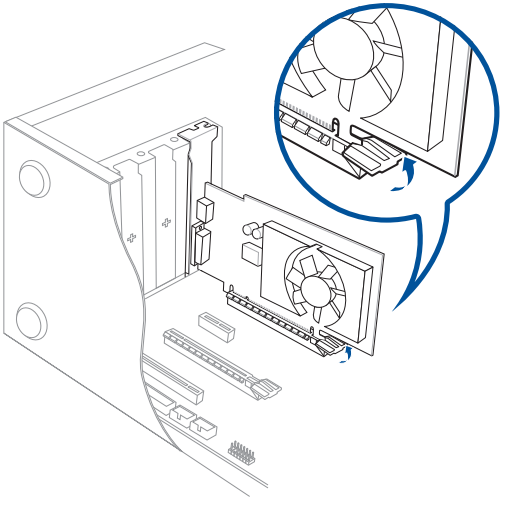

6. Use a screw driver and a screw to lock the graphics card on the chassis.

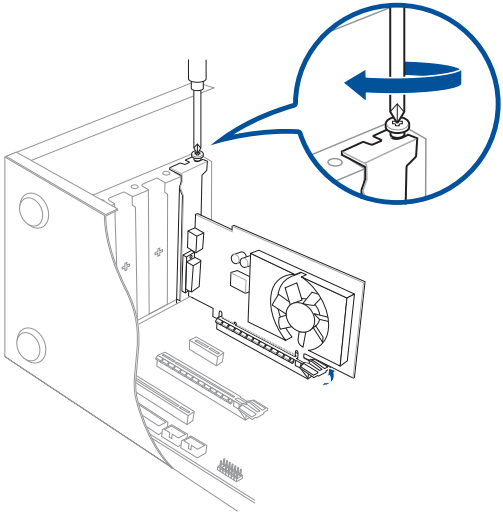

7. (Optional) Connect a proper power supply plug to the graphics card.

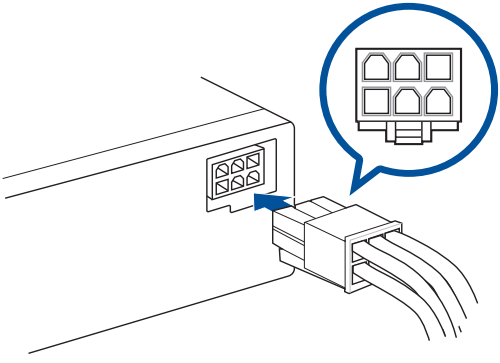

Setting up your computer

This section guides you through connecting the main hardware devices, such as the external monitor, keyboard, mouse, and power cord, to your computer.

Connecting an external monitor

Using the onboard display output ports

Connect your monitor to the onboard display output port.

To connect an external monitor using the onboard display output ports:

1. Connect a monitor to a display output port on the rear panel of your computer.
2. Plug the monitor to a power source.

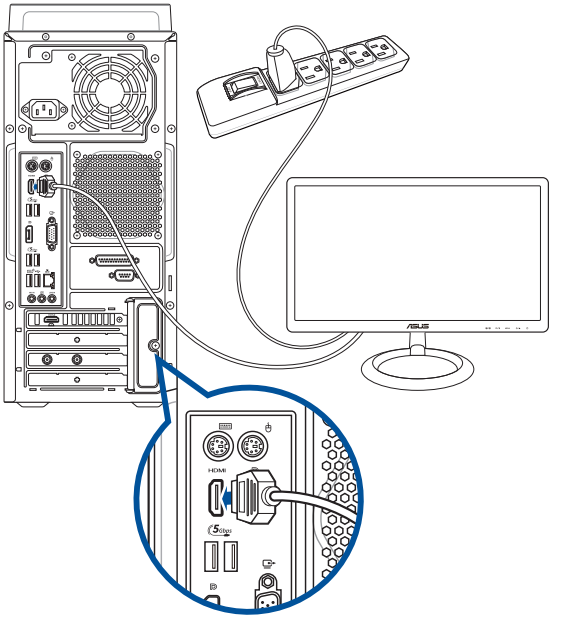

- If your computer comes with an ASUS Graphics Card, the graphics card is set as the primary display device in the BIOS. Hence, connect your monitor to a display output port on the graphics card.
- To connect multiple external monitors to your computer, refer to **Connecting multiple external displays** in Chapter 2 of this guide for details.

Connecting a USB keyboard and a USB mouse

Connect a USB keyboard and a USB mouse to the USB ports on the rear panel of your computer.

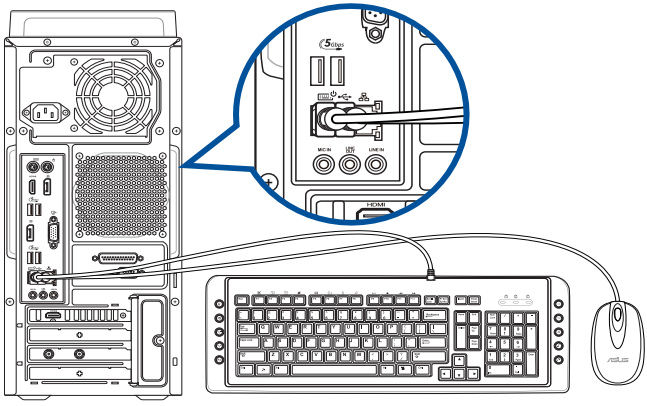

Connecting the power cord

Connect one end of the power cord to the power connector on the rear panel of your computer and the other end to a power source.

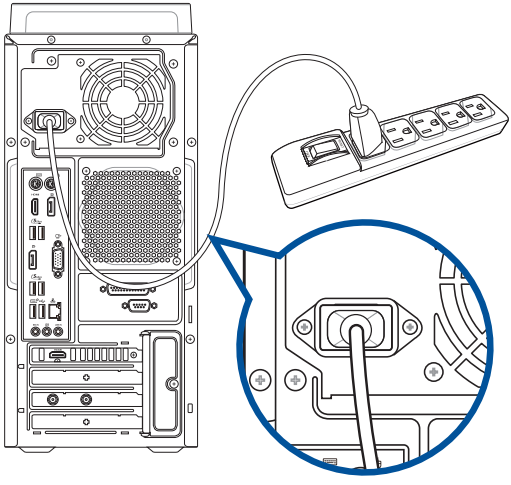

For safety purpose, ONLY connect the power cord to a grounded electrical outlet..

Turning your computer ON

This section describes how to turn on your computer after setting up your computer.

Turning your computer ON

To turn your computer ON:

1. Turn your monitor ON.
2. Press the power button on your computer.

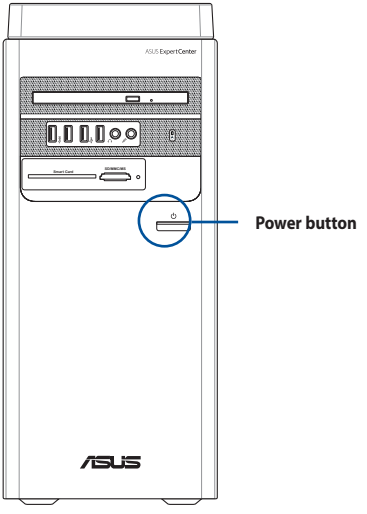

3. Wait until the operating system loads automatically.

Enabling fast startup

You can shut down the computer with fast startup enabled.

To enable fast startup in Shutdown settings:

Enter **Control Panel** in the search bar and open it (**View by: Category**), select **Hardware and Sound** > **Power Options** > **Choose what the power button does**, click **Change settings that are currently unavailable**, check **Turn on fast startup (recommended)** and click **Save changes**.

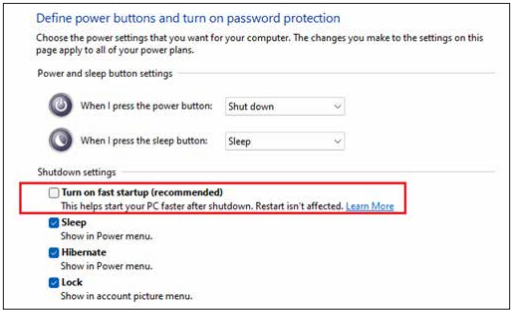

If fast startup is disabled, when you shut down the computer, it shuts down to the S5 power state.

Chapter 2

Connecting devices to your computer

ENGLISH

Connecting a USB storage device

This desktop PC provides USB 3.2 Gen 1 / USB 3.2 Gen 1 + USB Type-C® (optional) and USB 2.0 ports on the front and rear panels. The USB ports allow you to connect USB devices such as storage devices.

To connect a USB storage device:

- Insert the USB storage device to your computer.

You can enable or disable the front and rear USB 3.2 Gen 1 / USB 3.2 Gen 1 + USB Type-C® (optional) and USB 2.0 ports individually from the BIOS Setup. Refer to the **Configuring the USB ports using the BIOS** section in Chapter 3 of this user manual for details.

Front panel

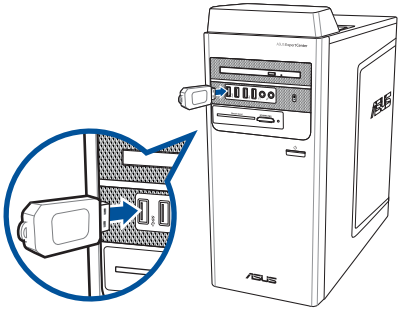

Rear panel

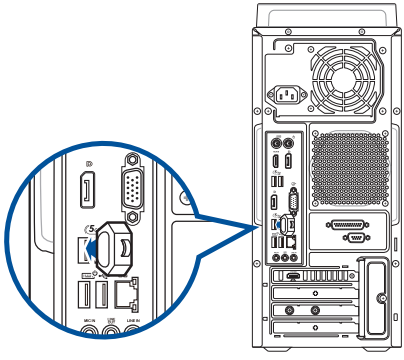

Connecting microphone and speakers

This desktop PC comes with microphone ports and speaker ports on both the front and rear panels. The audio I/O ports located on the rear panel allow you to connect 2-channel, 4-channel, 5.1-channel, and 7.1-channel stereo speakers.

- When your Desktop PC comes with an internal speaker, the audio output will be from the internal speaker.
- When you connect an external audio device such as earphone or speaker, you need to enable the audio device output. For details, refer to the section **Changing to the external audio output**.
- When you disconnect the audio device, you need to manually change the audio output to the internal speaker from the Control Panel.

Connecting Headphone and Mic

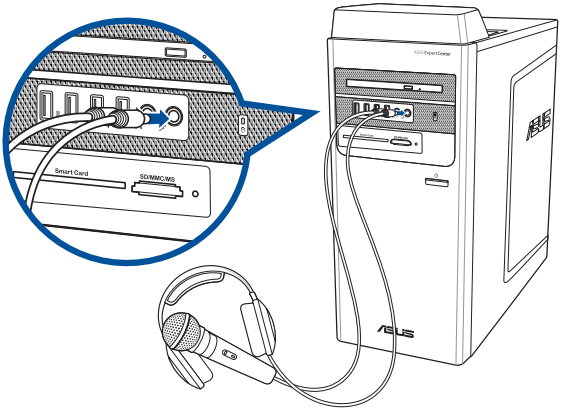

Connecting 2-channel Speakers

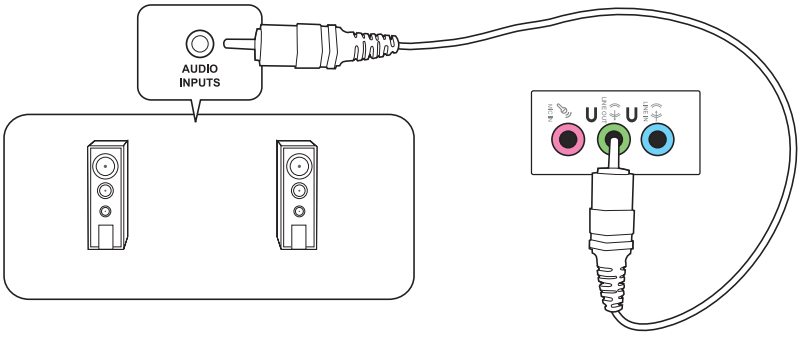

Connecting 4-channel Speakers

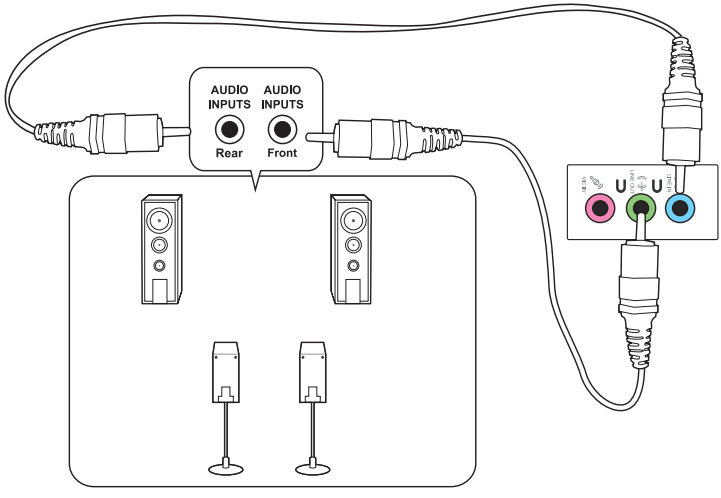

Connecting 5.1-channel Speakers

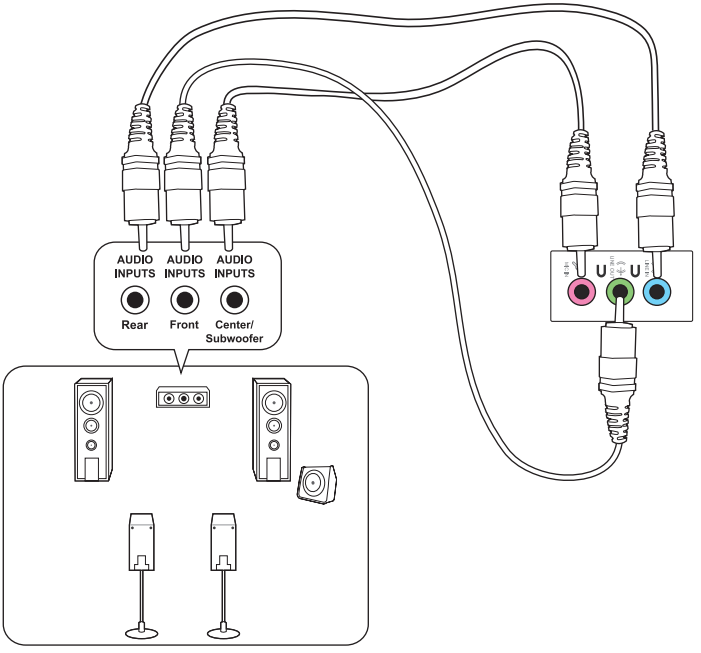

Connecting 7.1-channel Speakers

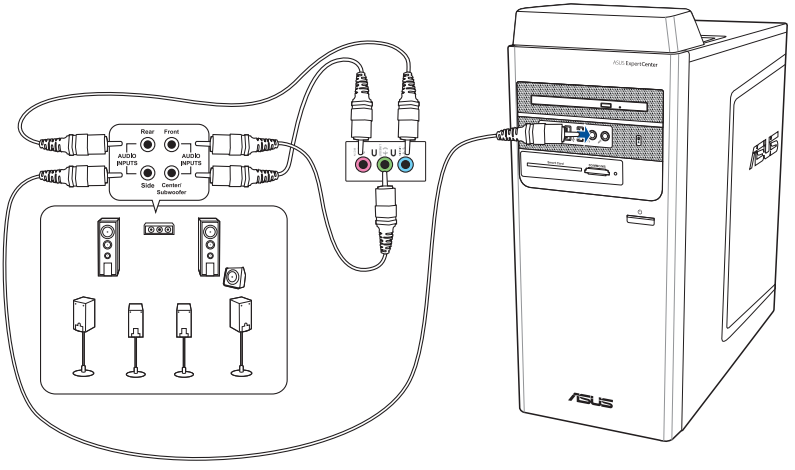

Changing to the external audio output

When you connect an external audio device to your Desktop PC, enable the audio device output to ensure a clear audio quality.

To change to the external audio output:

Connect an external audio device such as earphone or speaker to the rear Line Out port. The Audio Manager screen automatically pops up.

For the location of the rear Line Out port, refer to the section **Getting to know your computer**.

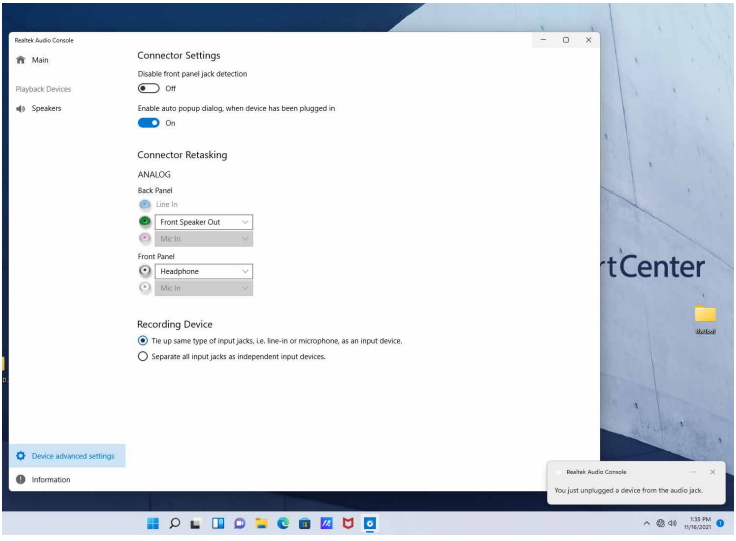

The Audio Manager screenshot above is for reference only.

Connecting multiple external displays

Your desktop PC may come with VGA, HDMI™, or DVI ports and allows you to connect multiple external displays.

Setting up multiple displays

When using multiple monitors, you are allowed to set display modes. You can use the additional monitor as a duplicate of your main display, or as an extension to enlarge your Windows desktop.

To set up multiple displays:

1. Turn off your computer.
2. Connect the two monitors to your computer and connect the power cords to the monitors. Refer to Setting up your computer section in Chapter 1 for details on how to connect a monitor to your computer.

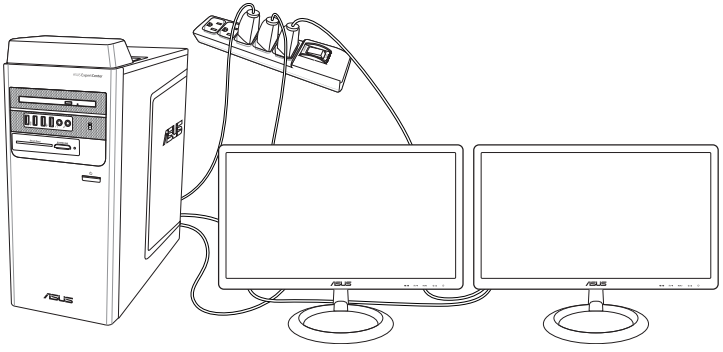

3. Turn on your computer.
4. From the Start menu, click **Settings** > **System** > **Display**.
5. Configure the settings for your displays.

For some graphics cards, only the monitor that is set to be the primary display has display during POST. The dual display function works only under Windows.

Connecting an HDTV

Connect a High Definition TV (HDTV) to the HDMI™ port of your computer.

- You need an HDMI™ cable to connect the HDTV and the computer. The HDMI™ cable is purchased separately.
- To get the best display performance, ensure that your HDMI™ cable is less than 15 meters.

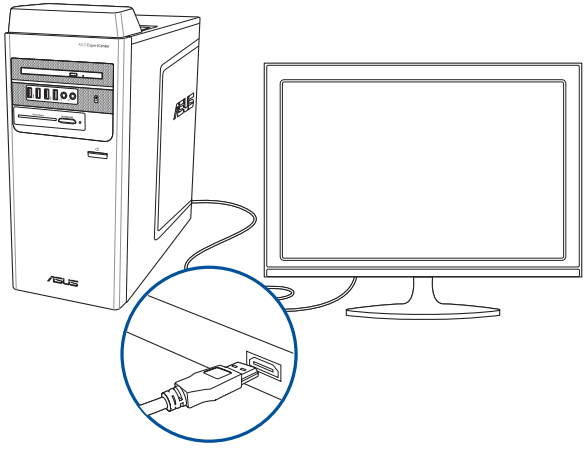

Chapter 3
Using your computer

ENGLISH

Proper posture when using your Desktop PC

When using your Desktop PC, maintaining the proper posture is necessary to prevent strain to your wrists, hands, and other joints or muscles. This section provides you with tips on avoiding physical discomfort and possible injury while using and fully enjoying your Desktop PC.



To maintain the proper posture:

- Position your computer chair to make sure that your elbows are at or slightly above the keyboard to get a comfortable typing position.
- Adjust the height of your chair to make sure that your knees are slightly higher than your hips to relax the backs of your thighs. If necessary, use a footrest to raise the level of your knees.
- Adjust the back of your chair so that the base of your spine is firmly supported and angled slightly backward.
- Sit upright with your knees, elbows and hips at an approximately 90º angle when you are at the PC.
- Place the monitor directly in front of you, and turn the top of the monitor screen even with your eye level so that your eyes look slightly downward.
- Keep the mouse close to the keyboard, and if necessary, use a wrist rest for support to reduce the pressure on your wrists while typing.
- Use your Desktop PC in a comfortably-lit area, and keep it away from sources of glare such as windows and straight sunlight.
- Take regular mini-breaks from using your Desktop PC.

Using the memory card reader (Optional)

Digital cameras and other digital imaging devices use memory cards to store digital picture or media files. The built-in memory card reader on the front panel of your system allows you to read from and write to different memory card drives.

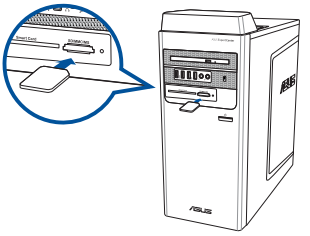

To use the memory card:

1. Insert the memory card into the card slot.

- A memory card is keyed so that it fits in only one direction. DO NOT force a card into a slot to avoid damaging the card.
- You can place media in one or more of the card slots and use each media independently. Place only one memory card in a slot at one time.

2. Select a program from the AutoPlay window to access your files.

- If AutoPlay is NOT enabled in your computer, click **File Explorer** from the Start menu, and then double-click the memory card icon to access the data on it.
- Each card slot has its own drive icon which is displayed on the File Explorer screen.

3. When finished, right-click the memory card drive icon on the Computer screen, click Eject, and then remove the card.

Never remove cards while or immediately after reading, copying, formatting, or deleting data on the card or else data loss may occur.

To prevent data loss, use "Safely Remove Hardware and Eject Media" in the Windows® notification area before removing the memory card.

Using the optical drive (Optional)

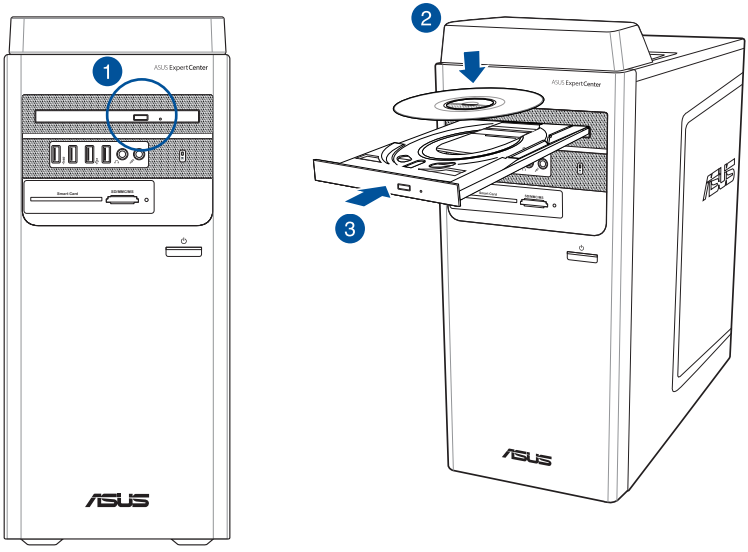

Inserting an optical disc

To insert an optical disc:

1. While your system is on, press the eject button on the drive bay cover to open the tray.
2. Place the disc on the optical drive with the label side outward if the desktop is positioned vertically and the label side up if the desktop is positioned horizontally.
3. Push the tray gently to close it.
4. Select a program from the AutoPlay window to access your files.

If AutoPlay is NOT enabled in your computer, to access the data on an optical disc:

- Click **File Explorer** from the Start menu, and then double-click the CD/DVD drive icon.

Removing an optical disc

To remove an optical disc:

1. While the system is on, do either of the following to eject the tray:
   - Press the eject button on the drive bay cover.
   - From the Start menu, click **File Explorer**, right-click the CD/DVD drive icon, and click **Eject**.
2. Remove the disc from the disc tray.

Configuring the USB ports using the BIOS

You can enable or disable the front and rear USB 3.2 Gen 1 and USB 2.0 ports from the BIOS Setup.

To disable or enable the front and rear USB 3.2 Gen 1 and USB 2.0 ports:

1. Press <Delete> to enter the BIOS Setup at startup.
2. From the BIOS Setup EZ Mode screen, press <F7> to enter Advanced Mode. From the Advanced Mode screen, click **Advanced** > **USB Configuration** > **USB Single Port Control**.
3. Select the USB port that you want to enable or disable.
4. Press <Enter> to enable or disable the selected USB port.
5. Click **Exit** and select **Save Changes & Reset** to save the changes made.

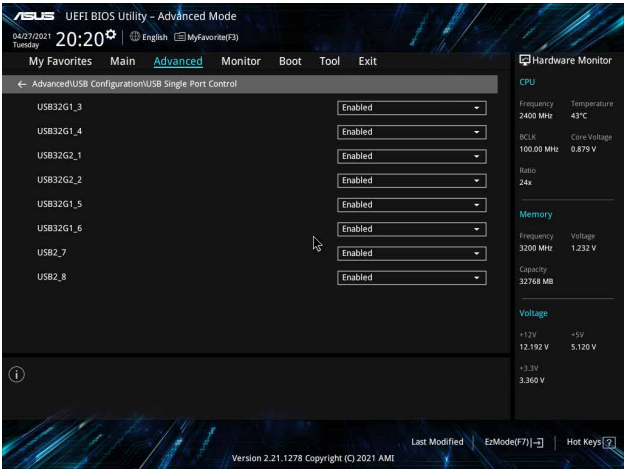

Refer to Chapter 1 for the location of the USB ports.

Configuring the HDD security setting using the BIOS

You can set a password in the BIOS Setup to protect your HDD.

To set a password for your HDD from the BIOS Setup:

1. Press <Delete> to enter the BIOS Setup at startup.
2. From the BIOS Setup EZ Mode screen, press <F7> to enter the Advanced Mode. From the Advanced Mode screen, click **Main** > **HDDx: [name of HDD]** to open the HDD Password screen.
3. Select the **Set User Password** item and press <Enter>.
4. From the **Create New Password** box, key in a password, then press <Enter>.
5. Confirm the password when prompted.
6. Click **Exit** and select **Save Changes & Reset** to save the changes made.

Take note of this password, which you would need to access the HDD.

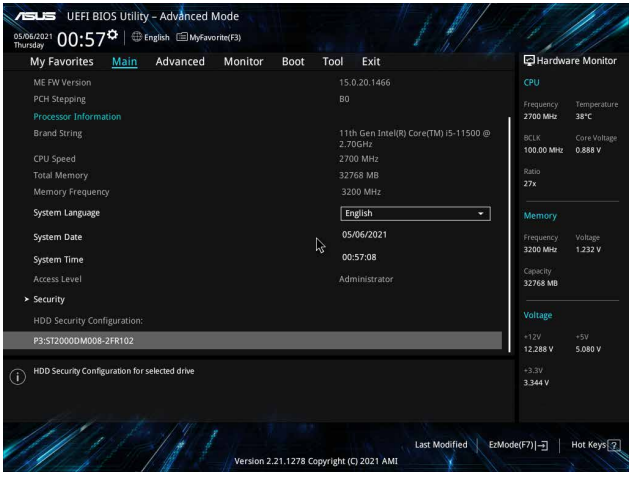

To change the password for your HDD from the BIOS Setup:

1. Follow steps 1 and 2 of the previous section to open the HDD Password screen.
2. Select the **Set User Password** item and press <Enter>.
3. From the **Enter Current Password** box, key in the current password, then press <Enter>.
4. From the **Create New Password** box, key in a new password, then press <Enter>.
5. Confirm the password when prompted.
6. Click **Exit** and select **Save Changes & Reset** to save the changes made.

To clear the user password, follow the same steps as in changing a user password, but press <Enter> when prompted to create/confirm the password. After you clear the password, the **Set User Password** item on top of the screen shows **Not Installed**.

Configuring the Keyboard/Mouse using the BIOS (on selected models only)

You can wake up your computer with a keyboard or mouse. You can enable the feature from the BIOS Setup.

To allow a keyboard or mouse to wake up your computer:

1. Restart your computer. When the ASUS logo appears, press <Delete> to enter the BIOS Setup.
2. From the BIOS Setup EZ Mode screen, press <F7> to enter Advanced Mode. From the Advanced Mode screen, click **Advanced**.
3. Go to **Advanced Power Management** > **ErP Support** / **ErP Ready**, then select **Disable** or **Enable (S5)**.
4. Go to **Advanced Power Management** > **Power On By USB Keyboard/Mouse**, then select **Enable**.
5. Click **Exit** and select **Save Changes & Reset** to save the changes made.

Chapter 4
Connecting to the Internet

Wired connection

Use an RJ-45 cable to connect your computer to a DSL/cable modem or a local area network (LAN).

Connecting via a DSL/cable modem

To connect via a DSL/cable modem:

1. Set up your DSL/cable modem.

Refer to the documentation that came with your DSL/cable modem.

2. Connect one end of an RJ-45 cable to the LAN (RJ-45) port on the rear panel of your computer and the other end to a DSL/cable modem.

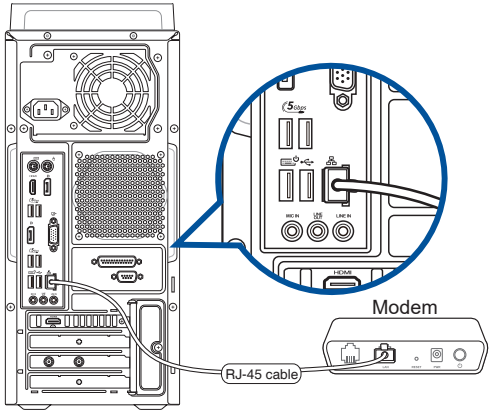

3. Turn on the DSL/cable modem and your computer.
4. Configure the necessary Internet connection settings.

- Contact your network administrator for details or assistance in setting up your Internet connection.
- For more details, refer to the sections **Configuring a dynamic IP/PPPoE network connection** or **Configuring a static IP network connection**.

Connecting via a local area network (LAN)

To connect via a LAN:

1. Connect one end of an RJ-45 cable to the LAN (RJ-45) port on the rear panel of your computer and the other end to your LAN.

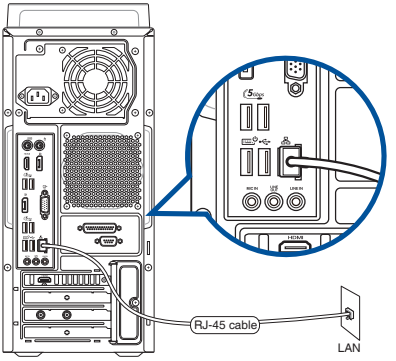

2. Turn on your computer.
3. Configure the necessary Internet connection settings.

- Contact your network administrator for details or assistance in setting up your Internet connection.
- For more details, refer to the sections **Configuring a dynamic IP/PPPoE network connection** or **Configuring a static IP network connection**.

Configuring a dynamic IP/PPPoE network connection

To configure a dynamic IP/PPPoE network connection:

1. Launch **Network and Sharing Center** in either of these two ways:

   a) From the taskbar, right-click , then click **Open Network and Sharing Center**.

   b) From the Start menu, click **Settings** > **Network & Internet** > **Ethernet** > **Network and Sharing Center**.

2. From the Open Network and Sharing Center screen, click **Change Adapter settings**.

3. Right-click on your LAN and select **Properties**.

4. Click **Internet Protocol Version 4(TCP/IPv4)** and click **Properties**.

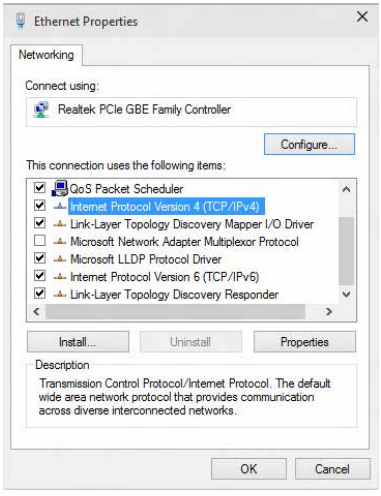

5. Click **Obtain an IP address automatically** and click **OK**.

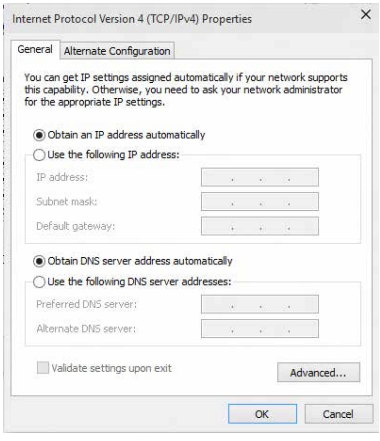

Continue to the next steps if you are using PPPoE connection.

6. Return to the **Network and Sharing Center** and then click **Set up a new connection or network**.

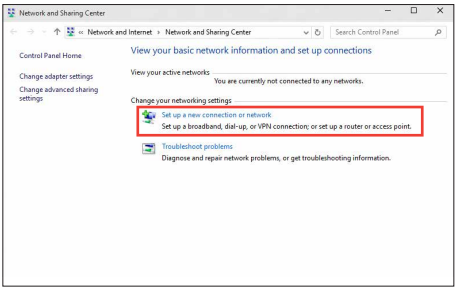

7. Select **Connect to the Internet** and click **Next**.

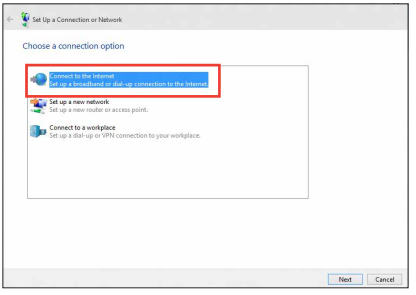

8. Select **Broadband (PPPoE)** and click **Next**.
9. Follow the next onscreen instructions to complete the setup.

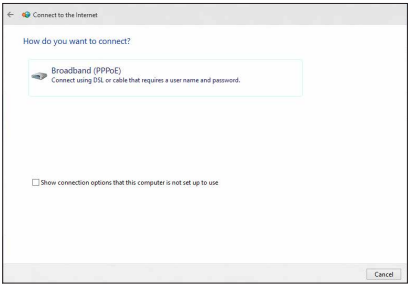

Configuring a static IP network connection

To configure a static IP network connection:

1. Repeat steps 1 to 4 of the previous section.
2. Click **Use the following IP address**.
3. Enter the IP address, Subnet mask and Gateway from your service provider.
4. If needed, enter the preferred DNS Server address and alternative address.
5. When done, click **OK**.

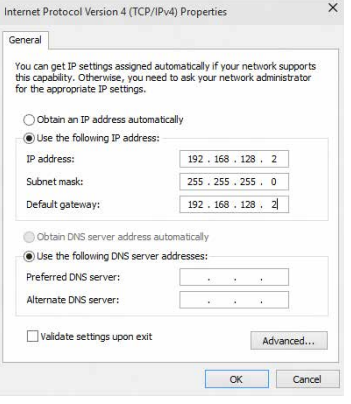

Installing the Wi-Fi antenna

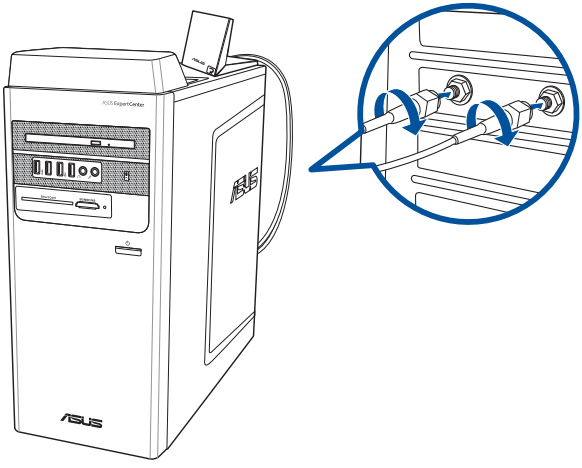

- Ensure that the ASUS 2x2 dual band Wi-Fi antenna is securely installed to the Wi-Fi ports on the ASUS network card.
- Ensure that the antenna is at least 20 cm away from all persons.
- Place the antenna on the top of your desktop PC for the best wireless performance.
- If your desktop PC comes with a 1x1 network card, the ASUS 2x2 dual band Wi-Fi antenna connected to this network card will operate in 1x1 mode.

The I/O port layout may vary with models, but the Wi-Fi antenna installation procedure is the same for all models.

Chapter 5
Using ASUS Business Manager

ENGLISH

ASUS Business Manager

ASUS Manager provides a set of tools for customizing and maintaining your ASUS computer. For detailed information, please refer to https://www.asus.com/support/FAQ/1042634/.

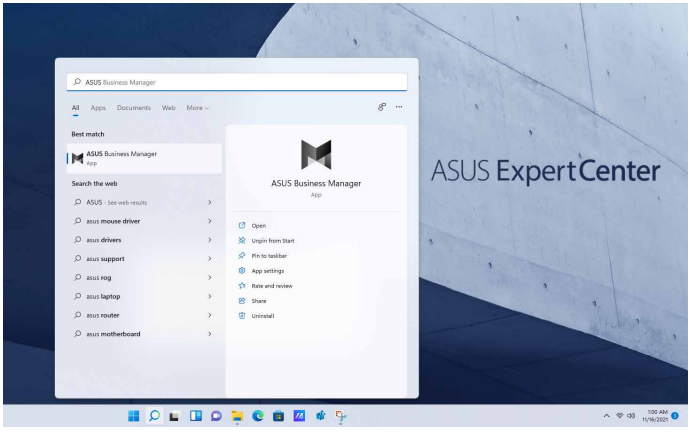

The URL may be changed without notice.

Chapter 6
Troubleshooting

ENGLISH

Troubleshooting

This chapter presents some problems you might encounter and the possible solutions.

? ***My computer cannot be powered on and the power LED on the front panel does not light up.***

- Check if your computer is properly connected.
- Check if the wall outlet is functioning.
- Check if the Power Supply Unit is switched on. Refer to the section **Turning your computer ON** in Chapter 1.

? ***My computer hangs.***

- Do the following to close the programs that are not responding:
  1. Simultaneously press <Alt> + <Ctrl> + <Delete> keys on the keyboard, then click **Task Manager**.
  2. Select the program that is not responding, then click **End Task**.
- If the keyboard is not responding, press and hold the Power button on your chassis until the computer shuts down. Then press the Power button to turn it on.

? ***I cannot connect to a wireless network using the ASUS WLAN Card (on selected models only)?***

- Ensure that you enter the correct network security key for the wireless network you want to connect to.
- Connect the external antennas (optional) to the antenna connectors on the ASUS WLAN Card and place the antennas on the top of your computer chassis for the best wireless performance.

? ***I cannot insert the M.2 Wi-Fi card / M.2 SSD module into the M.2 slot.***

Ensure that you follow the printing on the motherboard and insert the M.2 Wi-Fi card / M.2 SSD module into the proper M.2 slot.

? *The arrow keys on the number key pad are not working.*

Check if the Number Lock LED is off. When the Number Lock LED is on, the keys on the number key pad are used to input numbers only. Press the Number Lock key to turn the LED off if you want to use the arrow keys on the number key pad.

? *No display on the monitor.*

- Check if the monitor is powered on.
- Ensure that your monitor is properly connected to the video output port on your computer.
- If your computer comes with a discrete graphics card, ensure that you connect your monitor to a video output port on the discrete graphics card.
- Check if any of the pins on the monitor video connector is bent. If you discover bent pins, replace the monitor video connector cable.
- Check if your monitor is plugged to a power source properly.
- Refer to the documentation that came with your monitor for more troubleshooting information.

? *When using multiple monitors, only one monitor has display.*

- Ensure that the both monitors are powered on.
- During POST, only the monitor connected to the VGA port has display. The dual display function works only under Windows.
- When a graphics card is installed on your computer, ensure that you connect the monitors to the output port on the graphics card.
- Check if the multiple displays settings are correct.

? *My computer cannot detect my USB storage device.*

- The first time you connect your USB storage device to your computer, Windows automatically installs a driver for it. Wait for a while and go to My Computer to check if the USB storage device is detected.
- Connect your USB storage device to another computer to test if the USB storage device is broken or malfunctions.

? *I want to restore or undo changes to my computer's system settings without affecting my personal files or data.*

You can use Windows® 11 **Refresh your PC without affecting your files** recovery option to restore or undo changes to your computer's system settings without affecting your personal data such as documents or photos. To use this recovery option, click **Settings** > **Update & recovery** > **Recovery** from the Start menu, select **Refresh your PC without affecting your files**, and click **Get started**.

? *The picture on the HDTV is distorted.*

- It is caused by the different resolutions of your monitor and your HDTV. Adjust the screen resolution to fit your HDTV. To change the screen resolution:
  - From the Start menu, click **Settings** > **System** > **Display**.

? *My speakers produce no sound.*

- Ensure that you connect your speakers to the Line out port (lime) on the front panel or the rear panel.
- Check if your speak is connected to an electrical source and turned on.
- Adjust your speakers' volume.
- Ensure that your computer's system sounds are not Muted.
  - If it is muted, the volume icon is displayed as . To enable the system sounds, click  from the Windows notification area, then click .
  - If it is not muted, click  and drag the slider to adjust the volume.
- Connect your speakers to another computer to test if the speakers are working properly.

? *The DVD drive cannot read a disc.*

- Check if the disc is placed with the label side facing up.
- Check if the disc is centered in the tray, especially for the discs with non-standard size or shape.
- Check if the disc is scratched or damaged.

? *The DVD drive eject button is not responding.*

1. From the Start menu, click **File Explorer**.
2. Right-click 

, then click **Eject** from the menu

Power

Problem	Possible Cause	Action
No power (The power indicator is off)	Incorrect power voltage	• Set your computer's power voltage switch to your area's power requirements. • Adjust the voltage settings. Ensure that the power cord is unplugged from the power outlet.
	Your computer is not turned on.	Press the power key on the front panel to ensure that your computer is turned on.
	Your computer's power cord is not properly connected.	• Ensure that the power cord is properly connected. • Use other compatible power cord.
	PSU (Power supply unit) problems	Contact the ASUS Service Center about installing another PSU on your computer.

Display

Problem	Possible Cause	Action
No display output after turning the computer on (Black screen)	The signal cable is not connected to the correct VGA port on your computer.	• Connect the signal cable to the correct display port (onboard VGA or discrete VGA port). • If you are using a discrete VGA card, connect the signal cable to the discrete VGA port.
	Signal cable problems	Try connecting to another monitor.

LAN

Problem	Possible Cause	Action
Cannot access the Internet	The LAN cable is not connected.	Connect the LAN cable to your computer.
	LAN cable problems	Ensure the LAN LED is on. If not, try another LAN cable. If it still does not work, contact the ASUS service center.
	Your computer is not properly connected to a router or hub.	Ensure that your computer is properly connected to a router or hub.
	Network settings	Contact your Internet Service Provider (ISP) for the correct LAN settings.
	Problems caused by the anti-virus software	Close the anti-virus software.
	Driver problems	Reinstall the LAN driver

Audio

Problem	Possible Cause	Action
No Audio	Speaker or headphone is connected to the wrong port.	• Refer to your computer's User Guide for the correct port. • Disconnect and reconnect the speaker to your computer.
	Speaker or headphone does not work.	Try using another speaker or headphone.
	The front and back audio ports do not work.	Try both the front and back audio ports. If one port failed, check if the port is set to multi-channel.
	Driver problems	Reinstall the audio driver

System

Problem	Possible Cause	Action
System speed is too slow	Too many programs are running.	Close some of the programs.
	Computer virus attack	• Use an anti-virus software to scan for viruses and repair your computer. • Reinstall the operating system.
The system often hangs or freezes.	Hard disk drive failure	• Send the damaged hard disk drive to ASUS Service Center for servicing. • Replace with a new hard disk drive.
	Memory module problems	• Replace with compatible memory modules. • Remove the extra memory modules that you have installed, then try again. • Contact the ASUS Service Center for assistance.
	There is not enough air ventilation for your computer.	Move your computer to an area with better air flow.
	Incompatible softwares are installed.	Reinstall the OS and reinstall compatible softwares.
The system does not boot up	An expansion card other than a graphics card and a storage device is installed in PCIEX16_1.	Install this expansion card into any other PCIe slot and reboot the system.

CPU

Problem	Possible Cause	Action
Too noisy right after turning on the computer.	Your computer is booting up.	It is normal. The fan runs on its full speed when the computer is powering on. The fan slows down after entering the OS.
	The BIOS settings have been changed.	Restore the BIOS to its default settings.
	Old BIOS version	Update the BIOS to the latest version. Visit the ASUS Support site at **https://www.asus.com/support** to download the latest BIOS versions.
Computer is too noisy when in use.	The CPU fan has been replaced.	Ensure that you are using a compatible or ASUS-recommended CPU fan.
	There is not enough air ventilation for the computer.	Ensure that your computer is working in an area with good air flow.
	The system temperature is too high.	• Update the BIOS. • If you know how to reinstall the motherboard, try to clean the inner space of the chassis. • Contact the ASUS Service Center for assistance.

If the problem still persists, refer to your Desktop PC's warranty card and contact the ASUS Service Center. Visit the ASUS Support site at **https://www.asus.com/support** for the service center information.

Appendix

Working with Windows®

ENGLISH

Starting for the first time

When you start your computer for the first time, a series of screens appear to guide you in configuring your Windows® operating system. Follow the onscreen instructions to configure the following basic items:

- Personalize
- Get online
- Settings
- Your account

After configuring the basic items, Windows® proceeds to install your apps and preferred settings. Ensure that your computer is kept powered on during the setup process. Once the setup process is complete, the Desktop appears.

The screenshots in this chapter are for reference only.

Start menu

The Start menu is the main gateway to your computer's programs, Windows® apps, folders, and settings. You can use the Start menu to do these common activities:

- Start programs or Windows® apps
- Open commonly used programs or Windows® apps
- Adjust computer settings
- Get help with the Windows® operating system
- Turn off your computer
- Log off from Windows® or switch to a different user account

Launching the Start menu

You can launch the Start menu in two ways:

- Position your mouse pointer over the Start icon on your desktop then click it.
- Press the Windows® logo key on your keyboard.

Opening programs from the Start menu

One of the most common uses of the Start menu is opening programs installed on your Computer. You can open programs in two ways:

- Position your mouse pointer over the program then click to launch it.
- Use the arrow keys to browse through the programs. Press enter to launch it.

Windows® apps

Some Windows® apps require signing in to your Microsoft account before they are fully launched.

Launching Windows® apps from the Start menu

You can launch Windows® apps in two ways:

- Position your mouse pointer over the app then click to launch it.
- Use the arrow keys to browse through the apps. Press enter to launch an app.

Connecting to wireless networks

Wi-Fi

Access emails, surf the Internet, and share applications via social networking sites using your computer's Wi-Fi connection.

Connecting Wi-Fi

Connect your computer to a Wi-Fi network by using the following steps:

1. Click/Tap the **Wi-Fi** icon from the taskbar to enable Wi-Fi.
2. Select an access point from the list of available Wi-Fi connections.
3. Select **Connect** to start the network connection.

You may be prompted to enter a security key to activate the Wi-Fi connection.

Bluetooth

Use Bluetooth to facilitate wireless data transfers with other Bluetooth-enabled devices.

Pairing with other Bluetooth-enabled devices

You need to pair your computer with other Bluetooth-enabled devices to enable data transfers. Connect your devices by using the following steps:

1. Launch **Settings** from the Start menu.
2. Select **Devices > Bluetooth** to search for Bluetooth-enabled devices. *(for Windows® 10)*

   Select **Bluetooth & devices > Add device** to search for Bluetooth-enabled devices. *(for Windows® 11)*

3. Select a device from the list to pair your computer with the device.

For some Bluetooth-enabled devices, you may be prompted to key in the passcode of your computer.

Connecting to wired networks

You can also connect to wired networks, such as local area networks and broadband Internet connection, using your computer's LAN port.

Contact your Internet Service Provider (ISP) for details or your network administrator for assistance in setting up your Internet connection.

Turning your computer off

You can turn off your computer by doing either of the following procedures:

- Launch the Start menu, select the power icon then select **Shut down** to do a normal shutdown.

  From the log-in screen, select the power icon then select **Shut down**.

- Press alt + f4 to launch Shut Down Windows. Select **Shut down** from the drop-down list then select **OK**.

  If your computer is unresponsive, press and hold the power button for at least four (4) seconds until your computer turns off.

Putting your computer to the Off mode with fast startup enabled

You can put your computer to the Off mode with fast startup enabled:
Enter **Control Panel** in the search bar and open it (**View by: Category**), select **Hardware and Sound** > **Power Options** > **Choose what the power button does**, click **Change settings that are currently unavailable**, check **Turn on fast startup (recommended)** and click **Save changes**.

- Launch the Start menu, select the power icon then select **Shut down** to do a normal shutdown.

  From the log-in screen, select the power icon then select **Shut down**.

- Press alt + f4 to launch Shut Down Windows. Select **Shut down** from the drop-down list then select **OK**.

  If your computer is unresponsive, press and hold the power button for at least four (4) seconds until your computer turns off.

Putting your computer to the lowest power mode

You can put your computer to the lowest power mode in the following way:

Enter **Control Panel** in the search bar and open it (**View by: Category**), select **Hardware and Sound** > **Power Options** > **Choose what the power button does**, click **Change settings that are currently unavailable**, uncheck **Turn on fast startup (recommended)** and click **Save changes**.

- Launch the Start menu, select the power icon then select **Shut down** to do a normal shutdown.

  From the log-in screen, select the power icon then select **Shut down**.

- Press alt + f4 to launch Shut Down Windows. Select **Shut down** from the drop-down list then select **OK**.

  If your computer is unresponsive, press and hold the power button for at least four (4) seconds until your computer turns off.

Putting your computer to sleep

You can put your computer to Sleep mode in two ways:

- Launch the Start menu, select the power icon then select **Sleep** to put your computer to sleep.

  From the log-in screen, select the power icon then select **Sleep**.

- Press alt + f4 to launch Shut Down Windows. Select **Sleep** from the drop-down list then select **OK**.

You can also put your computer to Sleep mode by pressing the power button once.