AEG

# Integrated Microwave 26L

## OB6SM261UB






**The efficiency of a microwave, plus steam for healthy meals**
All the things you demand from a microwave and more. The 6000 Microwave with SteamSet allows you to use steam to prepare your favorite healthy dishes.

## Product Benefits & Features



**The efficiency of a microwave, plus steam for healthy meals**
All the things you demand from a microwave and more. The 6000 Microwave with SteamSet allows you to use steam to prepare healthy dishes with steam.

**Microwave cooking: The perfect alternative**
A perfect alternative to traditional cooking methods: This versatile microwave oven lets you prepare dishes quickly and efficiently with delicious results.

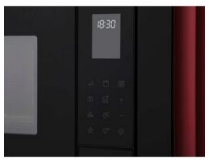

**Effortless, touch-button door**
Convenient and effortless: The door opens with a touch.



**Perfect fit: Simplified, one-tool installation**
Extra easy installation with Perfect Fit. Only one tool needed for a perfect result.



**Elegant, glossy black surface**
The microwave's sleek, minimalist design in high-gloss black matches the oven and other appliances.

- Clock & Timer
- Audible End Signal
- Child lock
- Quick Start
- Defrosting Programmes

AEG

# Integrated Microwave 26L

## OB6SM261UB

### Product Specification

| | |
|---|---|
| Maximum Microwave Output (W) | 900 |
| Number of Power Levels | 5 |
| Capacity (L) | 26 |
| Plug or Hardwired | UK Moulded Plug |
| Noise (dB) | 57.4 |
| Installation Type | Fully Built In |
| Dimensions (mm) (HxWxD) | 459x596x404 |
| Built-in Dimensions (mm) (HxWxD) | 450x562x500 |
| Frequency (Hz) | 50 |
| Colour | Black |
| Cavity Material | Painted Steel |
| Voltage (V) | 230 |
| Required Fuse (A) | 10 |
| Product Number (PNC) | All Open |
| Internal Dimensions (mm) (HxWxD) | 192x348x370 |
| Grill | No |
| Pre-programmed | Child Lock, Instant On/+30 Seconds, Quick Start |
| Signal Type | End signal, Touch signal |
| Turntable | Yes |
| Turntable Diameter (mm) | 325 |

241118XBAV

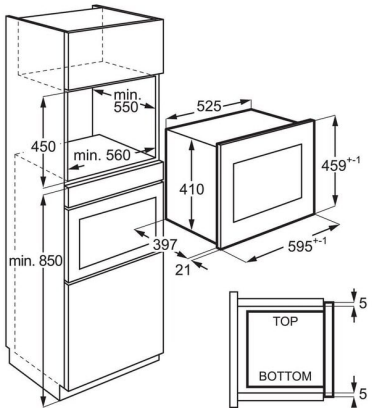


PSGBMC220DE00002

