6000 Induction Extractor Hob 80 cm Evacuation and recirculation

TH84CB03FB





More freedom in the kitchen
The 6000 Bridge Extractor Hob combines an induction hob to fit a 60cm cabinet, with a powerful built-in extractor for optimal air flow. It also has a Bridge function, allowing you to combine two cooking zones into one for larger cookware.

Product Benefits & Features



The Bridge Extractor Hob. For greater kitchen freedom
The Bridge Extractor Hob combines an induction hob for 60cm cabinets with a powerful built-in extractor for optimal airflow. Its Bridge function merges two cooking zones at the same temperature, ideal for bigger pots or plancha grill.



Long-Life Carbon Filter. Clean and re-use multiple times
The Grease Filter and Long-Life Carbon Filter are easy to clean in the dishwasher, so your kitchen air stays fresh, and your fan runs at its best for longer. Carbon filters can after cleaning be regenerated up to 8 times for extended life up to 3 years.



Flexible cooking with the Bridge Function
The Bridge Function allows you to connect two separate cooking zones to create a large, unified cooking area. This means even heat distribution is created over the entire surface – ideal for bigger pots or plancha grill.



4 Individual Zone Controls. Unlimited cooking options
4 Individual Zone Controls, with 9 power levels, allow you to Individually control 4 different cooking areas and set separate timers for each. Other functions include power boost, active touch, child lock and automatic extractor control.



Automatic Extractor Control. Adjusts as you cook
Automatic Extractor Control allows you to focus on what matters – cooking. The hob will automatically switch on and adjust the extraction level according to your cooking activities, keeping your kitchen fresh and hands free.

- ComboHob: 2-in-1 combination of hob and extractor fan.
- PowerBoost: Gives an instant increase in temperature allowing water to boil in less than 90 seconds.
- Child lock safety function.
- Auto safety switch off: The power automatically turns off if a cooking zone is left on for too long.
- The bridging function: Combines 2 cooking zones allowing flexibility for any size pan.
- Inverter motor
- Grease filter indicator.
- Charcoal filter indicator.
- Grease filter type and number: Aluminium mesh, 2
- Minute minder
- EcoTimer™: Saves energy by using the residual heat from the hob, turning off the cooking zone before the end of your timer to boost efficiency.
- Automated extraction: Auto mode adjusts the extractor fan based on hob temperature changes, so you can focus entirely on cooking.
- Pause functionality allows you to take short breaks without losing your cooking settings.
- Extraction mode
- Recirculation mode

AEG

6000 Induction Extractor Hob 80 cm Evacuation and recirculation

TH84CB03FB

Product Specification

Frame Type	Bevelled 2 Sides
Dimensions (mm) (WxD)	810x520
Built-in Dimensions (mm) (HxWxD)	225x750 - 780x490
Air Outlet (mm)	220
Grease Filter Type	Aluminium mesh
Number of Grease Filters	2
Aperture Cut Out (mm)	5
Energy Rating	A+
Fluid Dynamic Efficiency Rating	A
Grease Filter Efficiency Rating	B
Motor Type	Brushless
Cord Length (m)	N/A
Bar Code	7333394075822
Product Number (PNC)	ER
Plug or Hardwired	Hardwired connection only
Left Front - Power/Diameter	2300/3200W/210mm
Left Rear - Power/Diameter	2300/3200W/210mm
Right Front - Power/Diameter	1400/2500W/145mm
Right Rear - Power/Diameter	1800/2800W/180mm
Number of Cooking Zones	4
Series	6000
Hob Type	Induction Extractor Hob
Ducted Extraction Rate - Min/Max/Intensive (m³/h)	650/550/270
Recirculated Extraction Rate - Min/Max/Intensive (m³/h)	250/480/585
Ducted Noise Level - Min/Max/Intensive (dB)	50/66/69
Extraction Type - Recirculation	Yes
Extraction Type - Ducted	Yes
Hob2Hood Connection	Yes

PSGBHH240DE00001

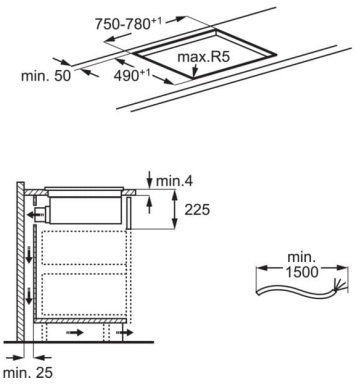

PSGBHH240DE00005

