Electrolux

electrolux.com/register

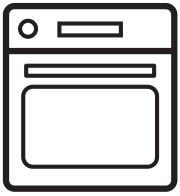

LOF4P46TX

EN User Manual | **Oven**

INSTALLATION

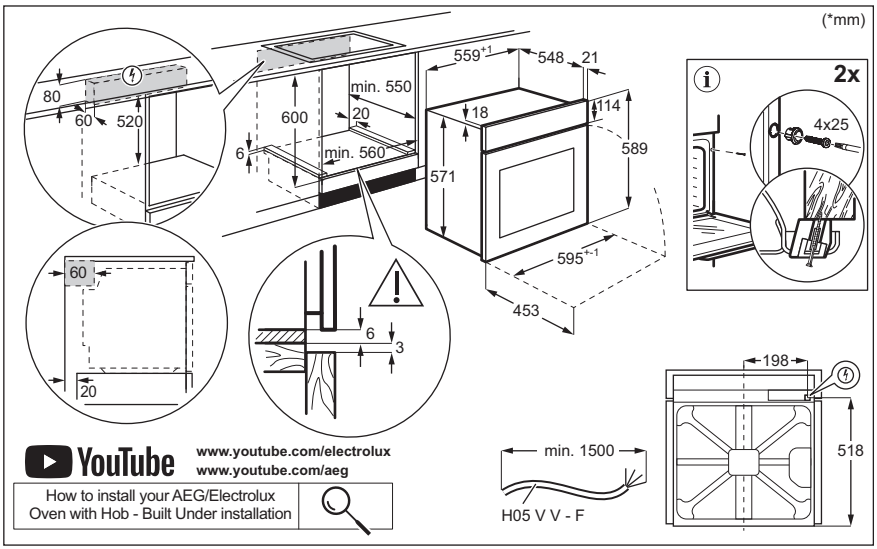

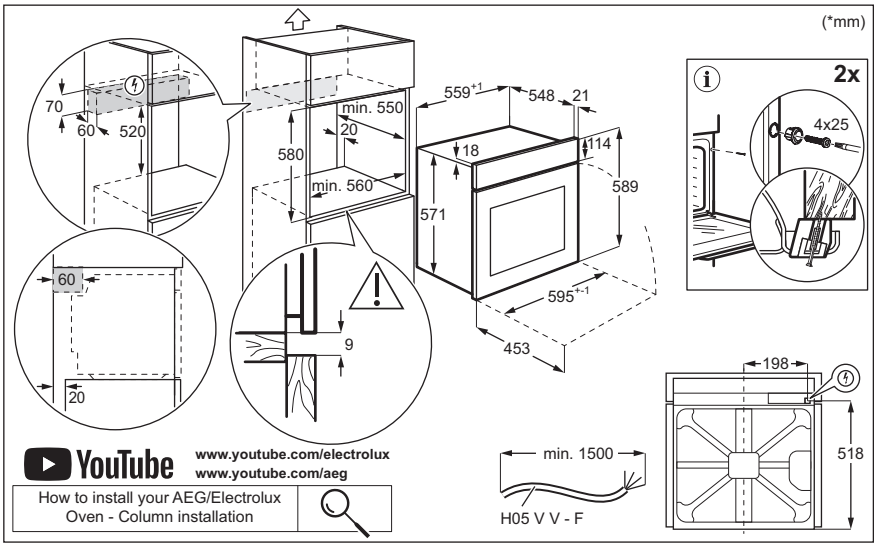

Welcome to Electrolux! Thank you for choosing our appliance.

Get usage advice, brochures, troubleshooting, service and repair information:
www.electrolux.com/support

Subject to change without notice.

CONTENTS

1. SAFETY INFORMATION....3
2. SAFETY INSTRUCTIONS....5
3. PRODUCT DESCRIPTION....8
4. CONTROL PANEL....8
5. BEFORE FIRST USE....9
6. DAILY USE....9
7. ADDITIONAL FUNCTIONS....13
8. CLOCK FUNCTIONS....14
9. USING THE ACCESSORIES....15
10. HINTS AND TIPS....15
11. CARE AND CLEANING....17
12. TROUBLESHOOTING....20
13. ENERGY EFFICIENCY....21
14. ENVIRONMENTAL CONCERNS....22

1. ⚠ SAFETY INFORMATION

Before the installation and use of the appliance, carefully read the supplied instructions. The manufacturer is not responsible for any injuries or damage that are the result of incorrect installation or usage. Always keep the instructions in a safe and accessible location for future reference.

1.1 Children and vulnerable people safety

- This appliance can be used by children aged from 8 years and above and persons with reduced physical, sensory or mental capabilities or lack of experience and knowledge if they have been given supervision or instruction concerning the use of the appliance in a safe way and understand the hazards involved. Children of less than 8 years of age and persons with very extensive and complex disabilities shall be kept away from the appliance unless continuously supervised.

- Children should be supervised to ensure that they do not play with the appliance.
- Keep all packaging away from children and dispose of it appropriately.
- WARNING: The appliance and its accessible parts become hot during use. Keep children and pets away from the appliance when in use and when cooling down.
- If the appliance has a child safety device, it should be activated.
- Children shall not carry out cleaning and user maintenance of the appliance without supervision.

1.2 General Safety

- This appliance is for cooking purposes only.
- This appliance is designed for single household domestic use in an indoor environment.
- This appliance may be used in offices, hotel guest rooms, bed & breakfast guest rooms, farm guest houses and other similar accommodation where such use does not exceed (average) domestic usage levels.
- Only a qualified person must install this appliance and replace the cable.
- Do not use the appliance before installing it in the built-in structure.
- Disconnect the appliance from the power supply before carrying out any maintenance.
- If the supply cord is damaged, it must be replaced by the manufacturer, its Authorised Service Centre or similarly qualified persons to avoid an electrical hazard.
- WARNING: Ensure that the appliance is switched off before replacing the lamp to avoid the possibility of electric shock.
- WARNING: The appliance and its accessible parts become hot during use. Care should be taken to avoid touching heating elements or the surface of the appliance cavity.
- Always use oven gloves to remove or insert accessories or ovenware.

- To remove the shelf supports first pull the front of the shelf support and then the rear end away from the side walls. Install the shelf supports in the opposite sequence.
- Do not use a steam cleaner to clean the appliance.
- Do not use harsh abrasive cleaners or sharp metal scrapers to clean the glass door since they can scratch the surface, which may result in shattering of the glass.
- Before pyrolytic cleaning, remove all accessories and excessive deposits/spills from the appliance cavity.

2. SAFETY INSTRUCTIONS

2.1 Installation

> ⚠ **WARNING!**
>
> Only a qualified person must install this appliance.

- Remove all the packaging.
- Do not install or use a damaged appliance.
- Follow the installation instructions available on our website.
- Always take care when moving the appliance as it is heavy. Always use safety gloves and enclosed footwear.
- Do not pull the appliance by the handle.
- Install the appliance in a safe and suitable place that meets installation requirements.
- Keep the minimum distance from other appliances and units.
- Before mounting the appliance, check if the appliance door opens without restraint.
- The appliance is equipped with an electric cooling system. It must be operated with the electric power supply.

2.2 Electrical connection

> ⚠ **WARNING!**
>
> Risk of fire and electric shock.

- All electrical connections should be made by a qualified electrician.
- The appliance must be earthed.
- Make sure that the parameters on the rating plate are compatible with the electrical ratings of the mains power supply.
- Always use a correctly installed shockproof socket.
- Do not use multi-plug adapters and extension cables.
- Make sure not to cause damage to the mains plug and to the mains cable. Should the mains cable need to be replaced, this must be carried out by our Authorised Service Centre.
- Do not let mains cables touch or come near the appliance door or the niche below the appliance, especially when it operates or the door is hot.
- The shock protection of live and insulated parts must be fastened in such a way that it cannot be removed without tools.
- Connect the mains plug to the mains socket only at the end of the installation. Make sure that there is access to the mains plug after the installation.
- If the mains socket is loose, do not connect the mains plug.
- Do not pull the mains cable to disconnect the appliance. Always pull the mains plug.
- Use only correct isolation devices: line protecting cut-outs, fuses (screw type fuses removed from the holder), earth leakage trips and contactors.
- The electrical installation must have an isolation device which lets you disconnect the appliance from the mains at all poles. The isolation device must have a contact opening width of minimum 3 mm.

- Fully close the appliance door before you connect the mains plug to the mains socket.
- This appliance is supplied with a main plug and a main cable.

Cable types applicable for installation or replacement for Europe:
H07 RN-F, H05 RN-F, H05 RRF, H05 VV-F, H05 V2V2-F (T90), H05 BB-F

For the section of the cable refer to the total power on the rating plate. You can also refer to the table:

Total power (W)	Section of the cable (mm²)
maximum 1380	3x0.75
maximum 2300	3x1
maximum 3680	3x1.5

The earth cord (green / yellow cable) must be 2 cm longer than the brown phase and blue neutral cables.

2.3 Use

⚠ WARNING!

Risk of injury, burns and electric shock or explosion.

- Do not change the specification of this appliance.
- Make sure that the ventilation openings are not blocked.
- Do not let the appliance stay unattended during operation.
- Deactivate the appliance after each use.
- Be careful when you open the appliance door while the appliance is in operation. Hot air can release.
- Do not operate the appliance with wet hands or when it has contact with water.
- Do not apply pressure on the open door.
- Do not use the appliance as a work surface or as a storage surface.
- Open the appliance door carefully. The use of ingredients with alcohol can cause a mixture of alcohol and air.
- Do not let sparks or open flames to come in contact with the appliance when you open the door.
- Always use glass and jars approved for preserving purposes.
- Do not put flammable products or items that are wet with flammable products in, near or on the appliance.

⚠ WARNING!

Risk of damage to the appliance.

- To prevent damage or discoloration to the enamel:
  - do not put ovenware or other objects in the appliance directly on the bottom.
  - do not put aluminium foil directly on the bottom of cavity of the appliance.
  - do not put water directly into the hot appliance.
  - do not keep moist dishes and food in the appliance after you finish the cooking.
  - be careful when you remove or install the accessories.
- Discoloration of the enamel or stainless steel has no effect on the performance of the appliance.
- Use a deep pan for moist cakes. Fruit juices cause stains that can be permanent.
- Always cook with the appliance door closed.
- If the appliance is installed behind a furniture panel (e.g. a door) make sure the door is never closed when the appliance operates. Heat and moisture can build up behind a closed furniture panel and cause subsequent damage to the appliance, the housing unit or the floor. Do not close the furniture panel until the appliance has cooled down completely after use.

2.4 Care and cleaning

⚠ WARNING!

Risk of injury, fire, or damage to the appliance.

- Before maintenance, deactivate the appliance and disconnect the mains plug from the mains socket.

- Make sure the appliance is cold. There is the risk that the glass panels can break.
- Replace immediately the door glass panels when they are damaged. Contact the Authorised Service Centre.
- Be careful when you remove the door from the appliance, the door is heavy.
- Clean regularly the appliance to prevent the deterioration of the surface material.
- Clean the appliance with a moist soft cloth. Use only neutral detergents. Do not use abrasive products, abrasive cleaning pads, solvents or metal objects.
- If you use an oven spray, follow the safety instructions on its packaging.

2.5 Pyrolytic cleaning

⚠ WARNING!

Risk of Injury / Fires / Chemical Emissions (Fumes) in Pyrolytic Mode.

- Before carrying out the pyrolytic cleaning and initial preheating remove from the oven cavity:
  - any excess food residues, oil or grease spills / deposits.
  - any removable objects (including shelves, side rails, etc., provided with the appliance) especially any non-stick pots, pans, trays, utensils, etc.
- Read carefully all the instructions for pyrolytic cleaning.
- Keep children away from the appliance while the pyrolytic cleaning operates. The appliance becomes very hot and hot air is released from the front cooling vents.
- Pyrolytic cleaning is a high temperature operation that can release fumes from cooking residues and construction materials, as such consumers are advised to:
  - provide good ventilation during and after the pyrolytic cleaning.
  - provide good ventilation during and after the initial preheating.
- Do not spill or apply water on the oven door during and after the pyrolytic cleaning to avoid damaging the glass panels.
- Fumes released from all pyrolytic ovens / cooking residues as described are not harmful to humans, including children, or persons with medical conditions.
- Keep pets away from the appliance during and after the pyrolytic cleaning and initial preheating. Small pets (especially birds and reptiles) can be highly sensitive to temperature changes and emitted fumes.
- Non-stick surfaces on pots, pans, trays, utensils etc., can be damaged by the high temperature pyrolytic cleaning operation of all pyrolytic ovens and can be also a source for low level harmful fumes.

2.6 Internal lighting

⚠ WARNING!

Risk of electric shock.

- Concerning the lamp(s) inside this product and spare part lamps sold separately: These lamps are intended to withstand extreme physical conditions in household appliances, such as temperature, vibration, humidity, or are intended to signal information about the operational status of the appliance. They are not intended to be used in other applications and are not suitable for household room illumination.
- This product contains a light source of energy efficiency class G.
- Use only lamps with the same specifications.

2.7 Service

- To repair the appliance contact the Authorised Service Centre.
- Use original spare parts only.

2.8 Disposal

⚠ WARNING!

Risk of injury or suffocation.

- Contact your municipal authority for information on how to dispose of the appliance.
- Disconnect the appliance from the mains supply.
- Cut off the mains electrical cable close to the appliance and dispose of it.

3. PRODUCT DESCRIPTION

3.1 General overview

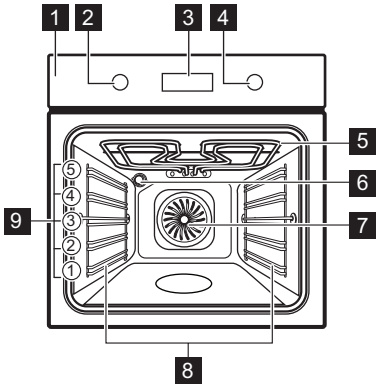

1 Control panel
2 Knob for the heating functions
3 Display
4 Control knob
5 Heating element
6 Lamp
7 Fan
8 Shelf support, removable
9 Shelf positions

4. CONTROL PANEL

4.1 Turning the appliance on and off

To turn on the appliance:

1. Press the knobs. The knobs come out.
2. Turn the knob for the heating functions to select a function.
3. Turn the control knob to adjust settings.

To turn off the appliance: turn the knob for the heating functions to the off position 0.

4.2 Control panel overview

	Press to set timer functions.
	Press and hold to set the function: Fast Heat Up.
	Press to turn the appliance lamp on and off.
	Press and hold to set the function: Lock.
OK	Press to confirm your selection.

4.3 Display indicators

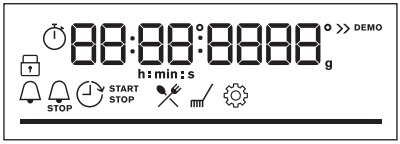

Display with key functions.

	The appliance is locked.
	Submenu: Assisted Cooking.
	Submenu: Cleaning.
	Submenu: Settings
	Fast Heat Up is activated.
	Minute minder is activated.
STOP	Cooking time is activated.
	Time Delayed Start is activated.
	Uptimer is activated.

—	Progress bar - visually indicates when the appliance reaches the set temperature or when the cooking time comes to an end.

5. BEFORE FIRST USE

⚠ WARNING!
Refer to Safety chapters.

5.1 Setting the time

After the first connection to the mains, wait until the display shows: **"00:00"** or **"12:00"** (depending on the model).

1. Turn the control knob to set the time.
2. Press OK.

5.2 Initial preheating and cleaning

Preheat the empty appliance before the first use and contact with food. The appliance can emit unpleasant smell and smoke. Ventilate the room during preheating.

1. Remove all accessories and removable shelf supports from the appliance.
2. Set the function . Set the maximum temperature. Let the appliance operate for 1 h.
3. Set the function . Set the maximum temperature. Let the appliance operate for 15 min.
4. Set the function . Set the maximum temperature. Let the appliance operate for 15 min.
5. Turn off the appliance and wait until it is cold.
6. Clean the appliance and the accessories only with a microfibre cloth, warm water and a mild detergent.
7. Put the accessories and removable shelf supports back to their initial position.

6. DAILY USE

⚠ WARNING!
Refer to Safety chapters.

6.1 Heating functions

	True Fan Cooking To roast meat and bake cakes. Set a lower temperature than for Conventional Cooking as the fan distributes heat evenly in the oven interior.
	Conventional Cooking To bake and roast food on one shelf position.
	Frozen Foods To make convenience food crispy, e.g. french fries, potato wedges or spring rolls.
	Pizza Function To bake pizza and other dishes that require more heat from below.
	Bottom Heat To make browning and crispy bottom. Use the lowest shelf position.
	Defrost To defrost food (vegetables and fruit). The defrosting time depends on the amount and size of the frozen food.
	Moist Fan Baking This function is designed to save energy during cooking. When you use this function, the temperature inside the appliance may differ from the set temperature. The residual heat is used. The heating power may be reduced. For more information refer to "Daily Use" chapter, Notes on: Moist Fan Baking.

	Grill To grill thin pieces of food and to toast bread.
	Turbo Grilling To roast large meat joints or poultry with bones on one shelf position. To bake gratins and to brown.

The lamp may turn off automatically at a temperature below 80 °C during some heating functions.

6.2 Notes on: Moist Fan Baking

This function was used to comply with the energy efficiency class and ecodesign requirements (according to EU 65/2014 and EU 66/2014). Tests according to: IEC/EN 60350-1.

The oven door should be closed during cooking so that the function is not interrupted and the oven operates with the highest energy efficiency possible.

When you use this function the lamp automatically turns off after 30 sec.

For the cooking instructions refer to "Hints and tips" chapter, Moist Fan Baking. For general energy saving recommendations refer to "Energy Efficiency" chapter, Energy saving tips.

6.3 Setting: Heating functions

1. Turn the knob for the heating functions to select a heating function.
2. Turn the control knob to set the temperature.

Fast Heat Up - press and hold to shorten the heating time. It is available for some heating functions. Fan may turn on automatically.

6.4 Entering: Menu

Open the Menu to access Assisted Cooking dishes and settings.

1. Turn the knob for the heating functions to .

The display shows , , .

2. Turn the control knob and select the icon to enter submenu. Press OK.

6.5 Setting: Assisted Cooking

Assisted Cooking submenu consists of programmes that are designed for dedicated dishes. Programmes start with a suitable setting. You can adjust the time and the temperature during cooking.

1. Turn the knob for the heating functions to .
2. Turn the control knob to select . Press OK.
3. Turn the control knob to select a dish (P1 - P...). Press OK.
4. Turn the control knob to adjust the weight. Option is available for selected dishes. Press OK.
5. Place the food inside the appliance. Press OK.
6. When the function ends, check if the food is ready. Extend the cooking time, if needed.

Submenu: Assisted Cooking

Legend	
	Weight adjustment available.
	Preheat the appliance before you start cooking.
	Shelf level. Refer to "Product description" chapter.

The display shows **P** and a **number** of the dish that you can check in the table.

	Dish	Weight	Shelf level / Accessory
P1	**Roast Beef, rare**	1 - 1.5 kg; 4 - 5 cm thick pieces	**2**; **baking tray** Fry the meat for a few minutes in a hot pan. Insert to the appliance.
P2	**Roast Beef, medium**		
P3	**Roast Beef, well done**		
P4	**Steak, medium**	180 - 220 g per piece; 3 cm thick slices	**3**; roasting dish on **wire shelf** Fry the meat for a few minutes in a hot pan. Insert to the appliance.
P5	**Beef roast / braised** (prime rib, top round, thick flank)	1.5 - 2 kg	**2**; roasting dish on **wire shelf** Fry the meat for a few minutes in a hot pan. Add liquid. Insert to the appliance.
P6	**Roast Beef, rare** (slow cooking)	1 - 1.5 kg; 4 - 5 cm thick pieces	**2**; **baking tray** Fry the meat for a few minutes in a hot pan. Insert to the appliance.
P7	**Roast Beef, medium** (slow cooking)		
P8	**Roast Beef, well done** (slow cooking)		
P9	**Fillet of beef, rare** (slow cooking)	0,5 - 1.5 kg; 5 - 6 cm thick pieces	**2**; **baking tray** Fry the meat for a few minutes in a hot pan. Insert to the appliance.
P10	**Fillet of beef, medium** (slow cooking)		
P11	**Fillet of beef, done** (slow cooking)		
P12	**Veal roast** (e.g. shoulder)	0.8 - 1.5 kg; 4 cm thick pieces	**2**; roasting dish on **wire shelf** Add liquid. Roast covered.
P13	**Pork roast neck or shoulder**	1.5 - 2 kg	**2**; roasting dish on **wire shelf** Turn the meat after half of the cooking time.
P14	**Pulled pork** (slow cooking)	1.5 - 2 kg	**2**; **baking tray** Turn the meat after half of the cooking time to get an even browning.
P15	**Pork loin, fresh**	1 - 1.5 kg; 5 - 6 cm thick pieces	**2**; roasting dish on **wire shelf**
P16	**Pork spare ribs**	2 - 3 kg; use raw, 2 - 3 cm thin spare ribs	**3**; **deep pan** Add liquid to cover the bottom of a dish. Turn the meat after half of the cooking time.
P17	**Lamb leg with bones**	1.5 - 2 kg; 7 - 9 cm thick pieces	**2**; roasting dish on **baking tray** Add liquid. Turn the meat after half of the cooking time.
P18	**Whole chicken**	1 - 1.5 kg; fresh	**2**; casserole dish on **baking tray** Turn the chicken after half of the cooking time to get an even browning.

	Dish	Weight	Shelf level / Accessory
P19	**Half chicken**	0.5 - 0.8 kg	**3**; **baking tray**
P20	**Chicken breast**	180 - 200 g per piece	**2**; casserole dish on **wire shelf** Fry the meat for a few minutes in a hot pan.
P21	**Chicken legs, fresh**	-	**3**; **baking tray** If you marinated chicken legs first, set lower temperature and cook them longer.
P22	**Duck, whole**	2 - 3 kg	**2**; roasting dish on **wire shelf** Put the meat on roasting dish. Turn the duck after half of the cooking time.
P23	**Goose, whole**	4 - 5 kg	**2**; **deep pan** Put the meat on deep baking tray. Turn the goose after half of the cooking time.
P24	**Meat loaf**	1 kg	**2**; **wire shelf**
P25	**Whole fish, grilled**	0.5 - 1 kg per fish	**2**; **baking tray** Fill the fish with butter, spices and herbs.
P26	**Fish fillet**	-	**3**; casserole dish on **wire shelf**
P27	**Cheesecake**	-	**2**; ∅ 28 cm springform tin on **wire shelf**
P28	**Apple cake**	-	**3**; **baking tray**
P29	**Apple tart**	-	**2**; pie form on **wire shelf**
P30	**Apple pie**	-	**1**; ∅ 22 cm pie form on **wire shelf**
P31	**Brownies**	2 kg of dough	**3**; **deep pan**
P32	**Muffins**	-	**3**; muffin tray on **wire shelf**
P33	**Loaf cake**	-	**2**; loaf pan on **wire shelf**
P34	**Baked potatoes**	1 kg	**2**; **baking tray** Put the whole potatoes with skin on baking tray.
P35	**Wedges**	1 kg	**3**; **baking tray** lined with baking paper Cut potatoes into pieces.
P36	**Grilled mixed vegetables**	1 - 1.5 kg	**3**; **baking tray** lined with baking paper Cut the vegetables into pieces.
P37	**Croquettes, frozen**	0.5 kg	**3**; **baking tray**
P38	**Pommes, frozen**	0.75 kg	**3**; **baking tray**

	Dish	Weight	Shelf level / Accessory
P39	**Meat / vegetable lasagna with dry pasta sheets**	1 - 1.5 kg	**2**; casserole dish on **wire shelf**
P40	**Potato gratin** (raw potatoes)	1 - 1.5 kg	**1**; casserole dish on **wire shelf** Rotate the dish after half of the cooking time.
P41	**Pizza fresh, thin**	-	**2**; **baking tray** lined with baking paper
P42	**Pizza fresh, thick**	-	**2**; **baking tray** lined with baking paper
P43	**Quiche**	-	**2**; baking tin on **wire shelf**
P44	**Baguette / Ciabatta / White bread**	0.8 kg	**2**; **baking tray** lined with baking paper More time needed for white bread.
P45	**Whole grain / Rye / Dark bread**	1 kg	**2**; **baking tray** lined with baking paper / loaf pan on **wire shelf**

6.6 Changing: Settings

1. Turn the knob for the heating functions to .
2. Turn the control knob to select . Press OK.
3. Turn the control knob to select the setting. Press OK.
4. Turn the control knob to adjust the value. Press OK.
5. Turn the knob for the heating functions to the off position to exit Menu.

Submenu: Settings

	Setting	Value
01	Time of day	Change
02	Display brightness	1 - 5
03	Key tones	1 - Beep, 2 - Click, 3 - Sound off
04	Buzzer volume	1 - 4
05	Uptimer	On / Off
06	Light	On / Off
07	Fast Heat Up	On / Off
08	Cleaning Reminder	On / Off
09	Demo mode	Activation code: 2468
10	Software version	Check
11	Reset all settings	Yes / No

7. ADDITIONAL FUNCTIONS

7.1 Lock

This function prevents an accidental change of the appliance function.

When activated while the appliance is in use, it locks the control panel, ensuring that the current cooking settings continue uninterrupted.

When activated while the appliance is off, it keeps the control panel locked, preventing the appliance from being turned on unintentionally.

- press and hold to turn on the function.

A signal sounds. - flashes 3 times when the lock is turned on.

- press and hold to turn off the function.

7.2 Automatic switch-off

For safety reasons, if the heating function is active and no settings are changed, the appliance will turn off automatically after a certain period of time.

(°C)	(h)
30 - 115	12.5
120 - 195	8.5
200 - 245	5.5
250 - maximum	3

If you intend to run a heating function for a duration exceeding the automatic switch-off time, set the cooking time. Refer to the 'Clock functions' chapter.

The Automatic switch-off does not work with the functions: Light, Time Delayed Start.

7.3 Cooling fan

When the appliance operates, the cooling fan turns on automatically to keep the surfaces of the appliance cool. If you turn off the appliance, the cooling fan can continue to operate until the appliance cools down.

8. CLOCK FUNCTIONS

8.1 Timer functions description

Minute minder	To set a countdown timer. When the timer ends, the signal sounds. This function has no effect on the operation of the appliance and can be set at any time.
STOP **Cooking time**	To set cooking duration. When the timer ends, the signal sounds and the heating function will automatically turn off.
Time Delayed Start	To postpone the start and / or end of cooking.
Uptimer	To show how long the appliance operates. Maximum is 23 h 59 min. This function has no effect on the operation of the appliance and can be set at any time.

8.2 Setting: Minute minder

1. Press .

The display shows: 0:00 and .

2. Turn the control knob to set the Minute minder.
3. Press OK. The timer starts counting down immediately.

8.3 Setting: Cooking time STOP

1. Turn the knobs to select the heating function and to set the temperature.
2. Press until the display shows: 0:00 and STOP.
3. Turn the control knob to set the Cooking time.
4. Press OK. The timer starts counting down immediately.
5. When the time ends, press OK and turn the knob for the heating functions to the off position.

8.4 Setting: Time Delayed Start

1. Turn the knobs to select the heating function and to set the temperature.
2. Press until the display shows: and START.
3. Turn the control knob to set the start time.
4. Press OK.

The display shows: **--:--** STOP .

5. Turn the control knob to set the end time.
6. Press OK.

The timer starts counting down at a set start time.

7. When the time ends, press OK and turn the knob for the heating functions to the off position.

8.5 Setting: Uptimer

1. Turn the knob for the heating functions to to enter Menu.
2. Turn the control knob to select / Uptimer. Refer to "Daily Use" chapter, Menu: Settings.
3. Press OK.
4. Turn the control knob to turn the Uptimer on and off.
5. Press OK.

8.6 Setting: Time of day

1. Turn the knob for the heating functions to to enter Menu.
2. Turn the control knob to select / Time of day. Refer to "Daily use" chapter, Menu: Settings.
3. Turn the control knob to set the clock.
4. Press OK.

9. USING THE ACCESSORIES

⚠ WARNING!

Refer to Safety chapters.

9.1 Inserting accessories

Accessories available depending on model. Scan the QR code to check how to use accessories supplied with your appliance. You can order optional accessories separately. For more information, please contact your local supplier.

A small indentation at the top increases safety and provides tilt protection. The indentations are also anti-tip devices. The rim around the shelf prevents cookware from slipping off the shelf.

Insert the accessory (wire shelf / tray) between the guide bars of the shelf support.

Make sure that the shelf touches the back of the oven interior and the feet point down.

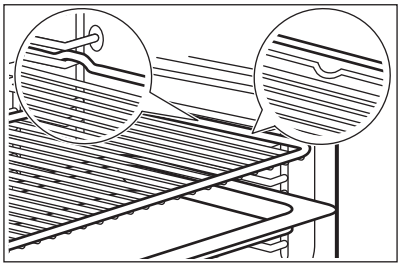

If your tray has a slope, position it towards the back of the oven interior.

If there is an inscription on the accessory, make sure it is facing you.

If you are using a tray with holes place the tray / pan underneath, to collect dripping liquids.

10. HINTS AND TIPS

10.1 Cooking recommendations

The temperature and cooking times in the tables are for guidance only. They depend on the recipes, quality and quantity of the ingredients used.

Your appliance may bake or roast differently than your previous appliance. The hints below show recommended settings for temperature, cooking time and shelf position for specific types of the food.

Count the shelf positions from the bottom of the oven floor.

If you cannot find the settings for a specific recipe, look for a similar one.

For energy saving tips refer to "Energy efficiency" chapter.

Symbols used in the tables:

	Food type
	Heating function
°C	Temperature
	Accessory
	Shelf position
	Cooking time (min)

10.2 Moist Fan Baking - recommended accessories

Use dark and non-reflective tins and containers. They have better heat absorption than light colour and reflective dishes.

- **Pizza pan** - dark, non-reflective, diameter 28cm
- **Baking dish** - dark, non-reflective, diameter 26cm
- **Ramekins** - ceramic, diameter 8cm, height 5 cm
- **Flan base tin** - dark, non-reflective, diameter 28cm

10.3 Moist Fan Baking

For the best results follow suggestions listed in the table below.

		°C		
Sweet rolls, 16 pieces	baking tray or dripping pan	180	2	20 - 30
Rolls, 9 pieces	baking tray or dripping pan	180	2	30 - 40
Pizza, frozen, 0.35 kg	wire shelf	220	2	10 - 15
Swiss Roll	baking tray or dripping pan	170	2	25 - 35
Brownie	baking tray or dripping pan	175	3	25 - 30
Soufflè, 6 pieces	ceramic ramekins on wire shelf	200	3	25 - 30
Sponge flan base	flan base tin on wire shelf	180	2	15 - 25
Victoria sandwich	baking dish on wire shelf	170	2	40 - 50
Poached fish, 0.3 kg	baking tray or dripping pan	180	3	20 - 25
Whole fish, 0.2 kg	baking tray or dripping pan	180	3	25 - 35
Fish fillet, 0.3 kg	pizza pan on wire shelf	180	3	25 - 30
Poached meat, 0.25 kg	baking tray or dripping pan	200	3	35 - 45
Shashlik, 0.5 kg	baking tray or dripping pan	200	3	25 - 30
Cookies, 16 pieces	baking tray or dripping pan	180	2	20 - 30
Macaroons, 24 pieces	baking tray or dripping pan	180	2	25 - 35
Muffins, 12 pieces	baking tray or dripping pan	170	2	30 - 40

		°C		
Savory pastry, 20 pieces	baking tray or dripping pan	180	2	25 - 30
Short crust biscuits, 20 pieces	baking tray or dripping pan	150	2	25 - 35
Tartlets, 8 pieces	baking tray or dripping pan	170	2	20 - 30
Vegetables, poached, 0.4 kg	baking tray or dripping pan	180	3	35 - 45
Vegetarian omelette	pizza pan on wire shelf	200	3	25 - 30
Mediterranean vegetables, 0.7 kg	baking tray or dripping pan	180	4	25 - 30

10.4 Information for test institutes

Tests according to IEC 60350-1.

				°C	
Small cakes, 20 per tray	Conventional Cooking	Baking tray	3	170	20 - 35
Small cakes, 20 per tray	True Fan Cooking	Baking tray	3	150 - 160	20 - 35
Small cakes, 20 per tray	True Fan Cooking	Baking tray	2 and 4	150 - 160	20 - 35
Apple pie, 2 tins Ø20 cm	Conventional Cooking	Wire shelf	2	180	70 - 90
Apple pie, 2 tins Ø20 cm	True Fan Cooking	Wire shelf	2	160	70 - 90
Fatless sponge cake, cake mould Ø26 cm **1)**	Conventional Cooking	Wire shelf	2	170	40 - 50
Fatless sponge cake, cake mould Ø26 cm **1)**	True Fan Cooking	Wire shelf	2	160	40 - 50
Fatless sponge cake, cake mould Ø26 cm **1)**	True Fan Cooking	Wire shelf	2 and 4	160	40 - 60
Short bread	True Fan Cooking	Baking tray	3	140 - 150	20 - 40
Short bread	True Fan Cooking	Baking tray	2 and 4	140 - 150	25 - 45
Short bread	Conventional Cooking	Baking tray	3	140 - 150	25 - 45
Toast **1)**	Grill	Wire shelf	4	max.	1 - 5

1) Preheat the appliance for 10 minutes.

11. CARE AND CLEANING

⚠ **WARNING!**
Refer to Safety chapters.

11.1 Notes on cleaning

Cleaning Agents

- Clean the front of the appliance only with a microfibre cloth with warm water and a mild detergent.
- Use a cleaning solution to clean metal surfaces.
- Clean stains with a mild detergent.

Everyday Use

- Clean the interior of the appliance after each use. Fat accumulation or other residue may cause fire.
- Moisture can condense in the appliance or on the door glass panels. To decrease the condensation, let the appliance work for 10 minutes before cooking. Do not store food in the appliance for longer than 20 minutes. Dry the interior of the appliance only with a microfibre cloth after each use.

Accessories

- Clean all accessories after each use and let them dry. Use only a microfibre cloth with warm water and a mild detergent. Do not clean the accessories in a dishwasher.
- Do not clean the non-stick accessories using abrasive cleaner or sharp-edged objects.

11.2 Removing the shelf supports

Remove the shelf supports to clean the appliance.

1. Turn off the appliance and wait until it is cold.
2. Pull the front of the shelf support away from the side wall.
3. Pull the rear end of the shelf support away from the side wall and remove it.

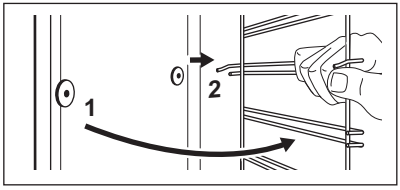

4. Install the shelf supports in the opposite sequence.

If the telescopic runners are supplied, its retaining pins must point to the front.

11.3 Pyrolytic Cleaning

⚠ WARNING!

There is a risk of burns.

⚠ CAUTION!

If there are other appliances installed in the same cabinet, do not use them at the same time as this function. It can cause damage to the oven.

Do not start the function if you did not fully close the oven door.

1. Make sure that the appliance is cold.
2. Remove all accessories.
3. Clean the oven interior and the inner door glass with warm water, a soft cloth and a mild detergent.
4. Turn the knob for the heating functions to ☰ to enter Menu.
5. Turn the control knob to select and press OK.

Cleaning programme	Duration
C1 - Light cleaning	1 h 30 min
C2 - Normal cleaning	2 h
C3 - Thorough cleaning	2 h 30 min

6. Turn the control knob to select the cleaning programme and press OK.
7. Press OK to start cleaning.

When the cleaning starts, the appliance door is locked and the lamp is off. Until the door unlocks the display shows .

8. After cleaning, turn the knob for the heating functions to the off position.
9. Wait until the appliance is cold and the door unlocks. Clean the oven interior with soft cloth and water.

11.4 Cleaning Reminder

When flashes on the display after cooking session, the appliance reminds you to clean it with pyrolytic cleaning. You can turn off the reminder in the submenu: Settings. Refer to "Daily use" chapter, Changing: Settings.

11.5 Removing and installing door

The oven door has three glass panels. You can remove the oven door and the internal glass panels to clean them. Read the whole "Removing and installing door" instruction before you remove the glass panels.

⚠ CAUTION!

Do not use the appliance without the glass panels.

1. Open the door fully and hold both hinges.

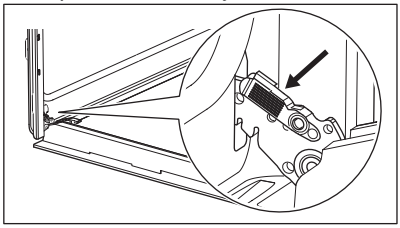

2. Lift and pull the latches until they click.

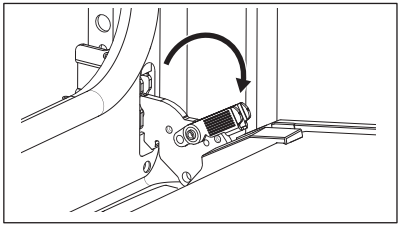

3. Close the oven door halfway to the first opening position. Then lift and pull to remove the door from its seat.

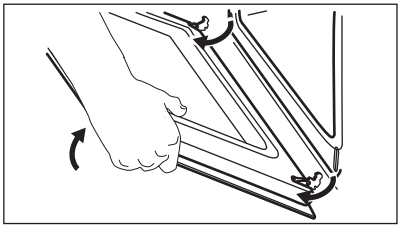

4. Put the door on a soft cloth on a stable surface.
5. Hold the door trim **B** on the top edge of the door at the two sides and push inwards to release the clip seal.

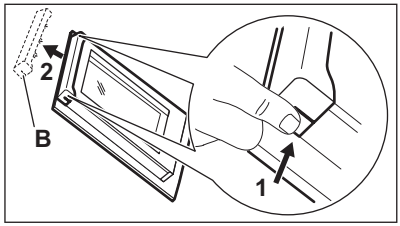

6. Pull the door trim to the front to remove it.
7. Hold the door glass panels by their top edge and carefully pull them out one by one. Start from the top panel. Make sure the glass slides out of the supports completely.

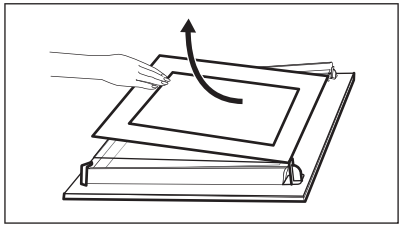

8. Clean the glass panels with water and soap. Dry the glass panels carefully. Do not clean the glass panels in the dishwasher.
9. After cleaning, install the glass panels and the oven door.

If the door is installed correctly, you will hear a click when closing the latches.

Make sure that you put the glass panels (**A** and **B**) back in the correct sequence. Check for the symbol / printing on the side of the glass panel. Each of the glass panels looks different to make the disassembly and assembly easier.

When installed correctly, the door trim clicks.

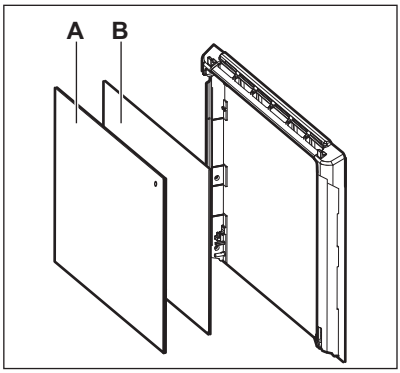

Make sure that you install the middle glass panel in the seats correctly.

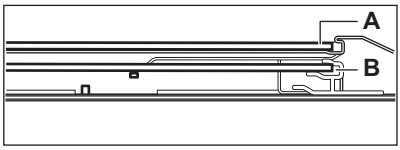

11.6 Replacing the lamp

⚠ WARNING!

Risk of electric shock.
The lamp can be hot.

1. Turn off the appliance and wait until it is cold.
2. Disconnect the appliance from the mains.
3. Place the cloth on the oven floor.

⚠ CAUTION!

Always hold the halogen lamp with a cloth to prevent grease residue from burning on the lamp.

Back lamp

1. Turn the glass cover to remove it.
2. Clean the glass cover.
3. Replace the lamp with a suitable 300 °C heat-resistant lamp.
4. Install the glass cover.

12. TROUBLESHOOTING

⚠ WARNING!

Refer to Safety chapters.

12.1 What to do if...

Problem	Check if...
You cannot activate or operate the appliance.	The appliance is correctly connected to an electrical supply.
The appliance does not heat up.	The automatic switch-off is deactivated.
The appliance does not heat up.	The appliance door is closed.
The appliance does not heat up.	The fuse is not blown.
The appliance does not heat up.	Lock is deactivated.
The lamp is turned off.	Moist Fan Baking - is activated.
The lamp does not work.	The lamp is burnt out.
Err C3	The appliance door is closed or the door lock is not broken.
Err F102	The appliance door is closed.
Err F102	The door lock is not broken.

Problem	Check if...
The display shows 00:00.	There was a power cut. Set the time of day.

If the display shows an error code that is not in this table, turn the house fuse off and on to restart the appliance. If the error code recurs contact an Authorised Service Centre.

12.2 Service data

If you cannot find a solution to the problem yourself, contact your dealer or an Authorised Service Centre.

The necessary data for the service centre is on the rating plate. The rating plate is located on the front frame of the appliance. It is visible when you open the door. Do not remove the rating plate from the appliance.

We recommend that you write the data here:

Model (MOD.) :
Product number (PNC):
Serial number (S.N.):

13. ENERGY EFFICIENCY

13.1 Product Information Sheet and Product Information according to EU Energy Labelling and Ecodesign Regulations

Supplier's name	Electrolux
Model identification	LOF4P46TX 949288024
Energy Efficiency Index	81.2
Energy efficiency class	A+
Energy consumption with a standard load, conventional mode	0.93 kWh/cycle
Energy consumption with a standard load, fan-forced mode	0.69 kWh/cycle
Number of cavities	1
Heat source	Electricity
Volume	72 l
Type of oven	Built-In Oven
Mass	31.7 kg

IEC/EN 60350-1 - Household electric cooking appliances - Part 1: Ranges, ovens, steam ovens and grills - Methods for measuring performance.

13.2 Product Information for power consumption and maximum time to reach applicable low power mode

Power consumption in standby	0.8 W
Maximum time needed for the equipment to automatically reach the applicable low power mode	20 min

13.3 Energy saving tips

Following tips below will help you save energy when using your appliance.

Make sure that the appliance door is closed when the appliance operates. Do not open the appliance door too often during cooking. Keep the door gasket clean and make sure it is well fixed in its position.

Use metal cookware and dark, non-reflective tins and containers to improve energy saving.

Do not preheat the appliance before cooking unless specifically recommended.

Keep breaks between baking as short as possible when you prepare a few dishes at one time.

Cooking with fan
When possible, use the cooking functions with fan to save energy.

Residual heat
When the cooking duration is longer than 30 min, reduce the appliance temperature to minimum 3 - 10 min before the end of cooking. The residual heat inside the appliance will continue to cook.

Use the residual heat to keep the food warm or warm up other dishes.

When you turn off the appliance, the display shows the residual heat or temperature.

Keep food warm
Choose the lowest possible temperature setting to use residual heat and keep the food warm. The residual heat indicator or temperature appears on the display.

Cooking with the lamp off
Turn off the lamp during cooking. Turn it on only when you need it.

Moist Fan Baking
Function designed to save energy during cooking.

When you use this function the lamp automatically turns off after 30 sec. You may turn on the lamp again but this action will reduce the expected energy savings.

14. ENVIRONMENTAL CONCERNS

Recycle materials with the symbol ♺. Put the packaging in relevant containers to recycle it. Help protect the environment and human health by recycling waste of electrical and electronic appliances. Do not dispose of appliances marked with the symbol with the household waste. Return the product to your local recycling facility or contact your municipal office.

electrolux.com

701130745-A-052025

