EN

USER' S OPERATION MANUAL

gorenje

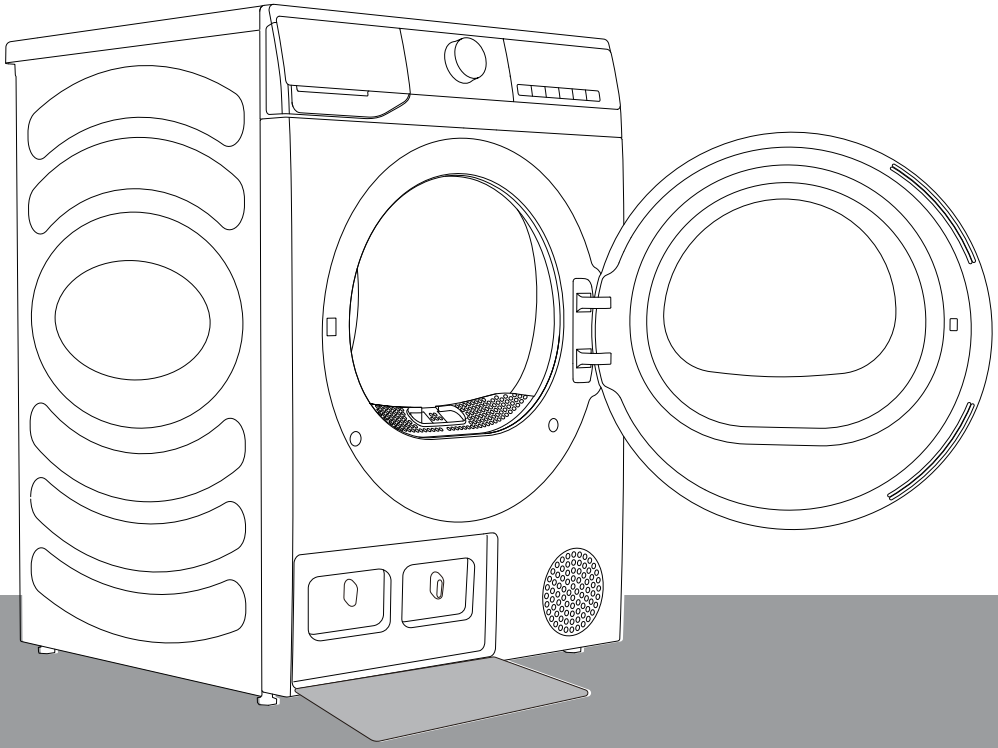

www.gorenje.com

Thank you very much for choosing our products.

- Please install and use this product correctly.
- The pictures in the manual are schematic diagrams, and the appearance and printing shall be subject to the actual products.
- The product subject to technical changes without prior notice for overall performance improvement.
- This dryer is intended solely for household use. Please do not use it to dry clothes that are not suitable for machine wash.

The following symbols used in the manual have the following meanings:

 Information, advice, tip, or recommendation

 Warning - general danger

 Warning - danger of electric shock

 Warning - danger of hot surface

 Warning - danger of fire



It is important to read the instructions carefully.

TABLE OF CONTENTS

4 SAFETY INFORMATION	**INTRODUCTION**
14 DESCRIPTION OF THE DRYER 15 Technical information	
16 INSTALLATION AND CONNECTION 16 Selecting the room 19 Adjusting the dryer feet 20 Draining the condensate 21 Connecting to the power mains 22 Moving and transport after installation	**PREPARING THE DRYER BEFORE FIRST USE**
23 BEFORE USING THE APPLIANCE FOR THE FIRST TIME	
24 DRYING PROCESS, STEP BY STEP (1 - 4) 24 Step 1: Heed the labels on the laundry 25 Step 2: Preparing for the laundry drying process 29 Step 3: Choosing the drying programme 32 Step 4: Selecting additional settings and functions	**DRYING PROCESS, STEP BY STEP**
36 FUNCTION TABLE	
37 MAINTENANCE & CLEANING 38 Cleaning the net filter in the door 39 Cleaning of the heat exchanger 41 Emptying the condensate tank 42 Cleaning the dryer	**DRYER CLEANING AND MAINTENANCE**
43 TROUBLESHOOTING 43 What to do ...? 47 Servicing	**TROUBLE-SHOOTING**
48 TYPICAL CONSUMPTION TABLE **49 TIPS FOR DRYING AND ECONOMIC USE YOUR DRYER** **50 DISPOSAL**	**MISCELLANE-OUS**

SAFETY INFORMATION

◇ Carefully read the instructions for use before using the dryer.

◇ Please, do not use the dryer without reading and understanding these instructions for use first.

◇ These instructions for use of a dryer are supplied with different types or models of dryers. Therefore, they may include descriptions of settings or equipment that are not available in your dryer.

◇ Failure to observe the instructions for use or inappropriate use of the dryer may result in damage to the laundry or the appliance, or injury to the user. Keep the instruction manual handy, near the dryer.

◇ Your dryer is intended solely for household use. If the dryer is used for professional, for-profit purpose or purpose exceeding normal use in a household, or if the dryer is used by a person who is not a consumer, the warranty period shall be equal to the shortest warranty period required by relevant legislation.

◇ The dryer is made in compliance with all relevant safety standards.

⚠ WARNING:

To reduce the risk of explosion, fire, death, electric shock, injury or scalding to persons when using this product, follow basic precautions, including the following.

INSTALLATION

- Follow the instructions for correct installation of the dryer and connection to the power mains.

- For appliances with ventilation openings in the base, a carpet must not obstruct the openings.

- The appliance must not be installed behind a lockable door, a sliding door or door with a hinge on the opposite side to that of the tumble dryer, in such a way that a full opening of the tumble dryer door is restricted.

- All and any repairs or maintenance tasks on the dryer should only be done by trained experts. Unprofessional repair may result in an accident or major malfunction.

- To avoid danger, a damaged power cord may only be replaced by the manufacturer, a service technician, or an authorized person.

- After installation, the dryer should stand still for two hours before it is connected to the power mains.

- At least two persons are required to install the tumble dryer on top of a washing machine.

- Install the dryer in a room with adequate ventilation and a temperature between 10°C and 25°C.

- Always use the ducts or hoses supplied with the dryer.

- Place the dryer on a level and stable solid (concrete) base.

- Do not place the dryer behind lockable or sliding door, or door with a hinge on the opposite side of the dryer door hinge. Install the dryer in such way that the door can always be freely opened.

- Never block the air exhaust (evacuation opening).
- Do not place the dryer on a carpet with long fibres as this may impede air circulation.
- Air in the dryer environment should not contain dust particles.
- The appliance may not be in contact with a wall or adjacent furniture.
- This appliance must not be stored or used in any outdoor location.
- That adequate ventilation has to be provided to avoid the back flow of gases into the room from appliances burning other fuels, including open fires.

ELECTRICAL SAFETY

- If the supply cord is damaged, it must be replaced by the manufacturer, its service agent or similarly qualified persons in order to avoid a hazard.
- The dryer may not be connected to the power mains using an extension cord.
- Do not connect the tumble dryer to an electrical outlet intended for an electric shaver or a hair dryer.
- The dryer is protected with an automatic switch-off system in case of overheating. This system will switch off the dryer if the temperature is too high.
- If the net filter is clogged, the overheating automatic switch-off system may be activated. Clean the filter, wait for the dryer to cool down, and try running it again. If the dryer still fails to start, call a service technician.

- Do not use multiple outlet sockets, an extension power cable or double adapter with this appliance.

- This appliance must be earthed via the power cord. In the event of malfunction or breakdown, grounding will reduce the risk of electric shock by providing a path of least resistance for electric current.

- Improper connection of the equipment-grounding conductor can result in risk of electric shock. Check with a qualified electrician or service personnel if you are in doubt as to whether the appliance is properly grounded.

- This appliance is equipped with a power cord having an equipment-grounding earthing pin and a grounding power plug. The power plug must be plugged into an appropriate outlet socket that is installed and grounded in accordance with all local codes and ordinances.

- Never unplug the appliance by pulling on the power cable. Always grip the power plug firmly and pull straight out from the outlet socket.

- Do not spray water inside or outside the appliance to clean it.

⚠WARNING:

- The appliance must not be supplied through an external switching device, such as a timer, or connected to a circuit that is regularly switched on and off by a utility.

- There is a risk of electric shock as the dryer is operated with electricity .

- Check the dryer for visible damage .

- You must not operate the dryer if it is damaged .

- Before connecting the dryer to the power supply , ensure that the electric voltage specified on the rating plate matches the voltage of your socket .

- Only use residual current circuit breakers with the following symbol.

- Ensure that the mains cable is not kinked or trapped , and it does not come into contact with heat sources or sharp edges .

CHILDREN SAFETY

- This appliance is not intended for use by persons (including children) with reduced physical, sensory or mental capabilities, or lack of experience and knowledge, unless they have been given supervision or instruction concerning use of the appliance by a person responsible for their safety.

- Children should be supervised to ensure that they do not play with the appliance.

- This appliance can be used by children aged from 8 years and above and persons with reduced physical, sensory or mental capabilities or lack of experience and knowledge if they have been given supervision or instruction concerning use of the appliance in a safe way and understand the hazards involved. Children shall not play with the appliance. Cleaning and user maintenance shall not be made by children without supervision.

- Children of less than 3 years should be kept away unless continuously supervised.

- Prevent your children and pets from entering the dryer drum.

- Before closing the dryer door and running the programme, make sure there is nothing except laundry in the drum (e.g. if a child climbed into the dryer drum and closed the door from the inside).

- Do not leave the appliance door open. Children may hang on the door or crawl inside the appliance, causing damage or injury.

USE

- The tumble dryer is not to be used if industrial chemicals have been used for cleaning.

- The lint trap has to be cleaned frequently.

- Do not dry unwashed items in the tumble dryer.

- Items that have been soiled with substances such as cooking oil, acetone, alcohol, petrol, kerosene, spot removers, turpentine, waxes and wax removers should be washed in hot water with an extra amount of detergent before being dried in the tumble dryer.

- Items such as foam rubber (latex foam), shower caps, waterproof textiles, rubber backed articles and clothes or pillows fitted with foam rubber pads should not be dried in the tumble dryer.

- Fabric softeners, or similar products, should be used as specified by the fabric softener instructions.

- Remove all objects from pockets such as lighters and matches.

- Oil-affected items can ignite spontaneously, especially when exposed to heat sources such as in a tumble dryer. The items become warm, causing an oxidation reaction in the oil. Oxidation creates heat. If the heat cannot escape, the items can become hot enough to catch fire. Piling, stacking or storing oil-affected items can prevent heat from escaping and so create a fire hazard.

- If it is unavoidable that fabrics that contain vegetable or cooking oil or have been contaminated by hair care products be placed in a tumble dryer they should first be washed in hot water with extra detergent - this will reduce, but not eliminate, the hazard.

- In case of a defect, only use approved spare parts by authorized manufacturers.

- If the condensate tube is blocked or clogged, then tumble dryer operation is stopped.

- Before moving the dryer or before storing it in a non-heated room during the winter, the condensate tank has to be emptied.

- Clean the dryer filters after each drying cycle. If you have removed the filters, replace them before the next drying cycle.

- Do not use any solvents or cleaning agents that could damage the dryer (please observe the recommendations and warnings provided by the manufacturers of the cleaning agents).

- Never add chemicals or fragrances into the condensate tank.

- After the drying process, unplug the dryer power cord from the power outlet.

- The dryer uses a heat pump system to heat the air.

- The system consists of a compressor and a heat exchanger. When the dryer is started, compressor operation (the sound of flowing liquid) or flow of refrigerant may be louder as long as the compressor operates. This is not a sign of malfunction and it will not affect useful life of the dryer. In time and with use of the dryer this noise will become quieter.

- Do not drink or prepare food with the condensed water/distilled water. It can cause health problems to people and pets.

- Remove clothes from the product immediately when drying is complete or the power is turned off during the drying process. Leaving clothes that has been dried in the appliance unattended could result in fire. Clothes not removed from the appliance after drying could result in fire. Remove clothes immediately after drying, and then hang or lay the clothes flat to cool.

- Never attempt to operate the appliance if it is damaged, malfunctioning, partially disassembled, or has missing or broken parts, including a damaged cord or plug.

- Do not attempt to separate any panels or disassemble the appliance. Do not apply any sharp objects to the control panel in order to operate the appliance.

- Never reach into the appliance while it is operating. Wait until the drum has completely stopped.

- In case of flood, disconnect the power plug and contact the After-slaes Service Center.

- Do not push down on the door, when the appliance door is open.

- Do not touch the power plug or the appliance controls with wet hands.

- Do not bend the power cable excessively or place a heavy object on it.

- Lint must not be allowed to accumulate around the tumble dryer.

- Keep the area underneath and around the appliance free of combustible materials such as fibres, paper, rags, chemicals, etc.

- As the dryer is heavy , you could injure yourself by trying to lift it . Do not lift the dryer on your own .

- You could cut your hands on the sharp edges of the dryer . Do not hold the dryer by the sharp edges .

- Protruding parts on the dryer may break off when it is lifted or pushed .

- Do not move the dryer by holding onto protruding parts .

- Check the dryer for damage caused during transportation . Never operate a dryer if it is damaged .

- Any residual water in the dryer may freeze and damage the dryer .

- Do not install the dryer in rooms that are at risk of frost . The appliance contains refrigerant which although it is environmentally friendly, is flammable R290.Failure to dispose of it properly may result in a fire or poisoning Dispose of the appliance properly and do not damage the pipes in the refrigerant circuit.

- When cleaning the filters, the lint should be thrown in the garbage bin and not washed through the drain in order to avoid spreading microplastics in the used water system.

⚠ WARNING:

Never stop a tumble dryer before the end of the drying cycle unless all items are quickly removed and spread out so that the heat is dissipated.

⚠ WARNING:

In the appliance enclosure or in the built-in structure, keep ventilation openings clear of obstruction.

⚠ WARNING:

Do not damage the refrigerant circuit.

DANGER OF HOT SURFACE

- At higher drying temperatures, the door glass will heat up. Be careful to avoid burns. Make sure children do not play near the door glass.

- The back of the dryer may get very hot during operation. Wait for the dryer to cool down completely before touching its back side.

- If you open the dryer door during the drying process, the clothes may be very hot and there is a risk of burning.

Service

- In case of incorrect dryer connection, incorrect use, or servicing by an unauthorized person, the user shall bear the cost of any damage as such damage shall not be covered by warranty.

- The warranty does not cover consumables, minor deviations in colour, increased noise that results from appliance age and which does not affect the functionality of the dryer, and aesthetic defects on components, which do not affect the dryer's functionality and safety.

DESCRIPTION OF THE DRYER

FRONT

1 Condensate tank
2 Programme selector knob
3 Control unit
4 Door
5 Net filter
6 Air vent
7 Heat exchanger door cover

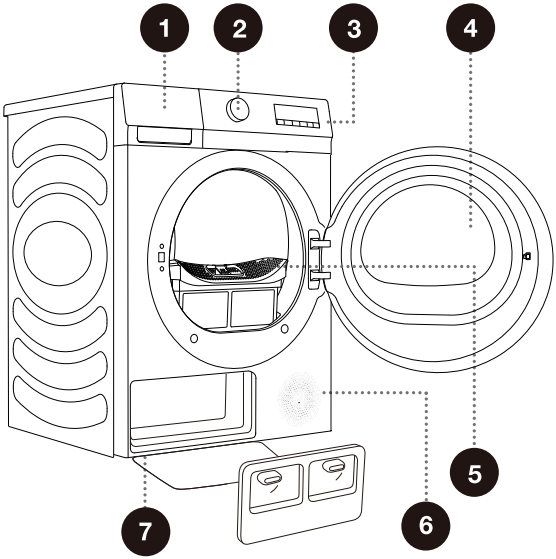

BACK

1 Power cord
2 Condensate discharge hose
3 Adjustable feet

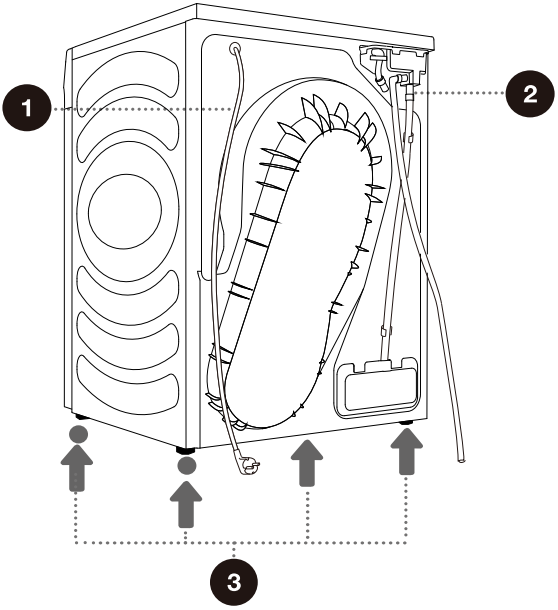

The illustrations in this manual are for reference purpose only. As our products are subject to continual improvement, the appearance, color and functional parts of your actual product may vary from the illustrations.

TECHNICAL INFORMATION

(DEPENDING ON THE MODEL)

Rated capacity	8kg	9kg
Net weight	43kg	50kg
Rated Voltage	220-240V~	220-240V~
Rated Power	650W	700W
Frequency	50Hz	50Hz
Refrigerant type	R290	R290
Refrigerant Charge	130g	150g

Dimensions(mm)

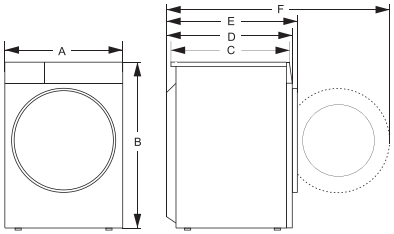

Index	Dimension(mm)	
	8kg	9kg
A	595	595
B	845	845
C	520	610
D	550	640
E	580	670
F	1060	1150

INSTALLATION AND CONNECTION

Remove all packaging. When removing the packaging, make sure not to damage the dryer with a sharp object.

SELECTING THE ROOM

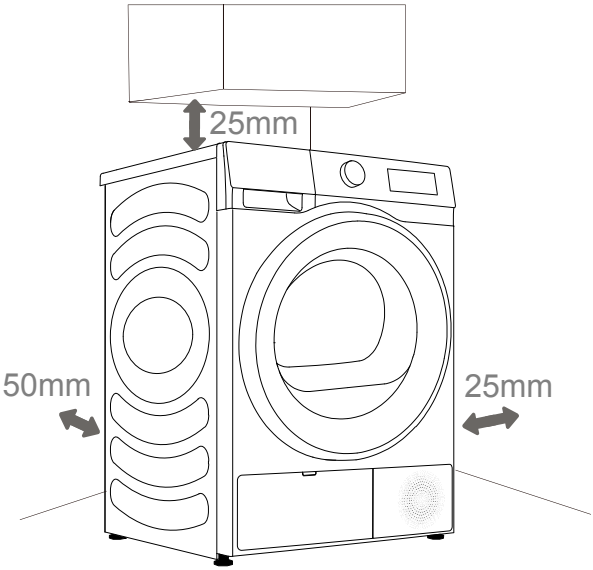

The dryer may not be in contact with a wall or adjacent furniture. For optimum dryer operation, we recommend observing the clearance from the walls as indicated in the figure. In case of failure to heed the required minimum clearance, the dryer may overheat.

Vents on the back wall and the air exhaust opening on the front side of the dryer should never be obstructed.

The room in which you will install the dryer should be sufficiently ventilated, with a temperature between 10°C and 25°C. Dryer operation at a lower environment temperature may result in condensate accumulation in the dryer interior. Do not place the dryer into a place where there is danger of freezing. Frozen water in the condensate tank and pump may damage the dryer.

The dryer emits heat. Therefore, do not place it in a very small room, as the drying process may take longer due to limited amount of available air.

Lighting in the room should be sufficient to allow reading the information on the display unit on the control panel.

DRYER PLACEMENT

This dryer must be stacked with a washing machine of the same brand using a stacking kit provided by the manufacturer. (see Figure 1) . You can contact aftersales for purchase stacking brackets, and install it according to user manual.
Alternatively, the dryer can be placed next to the washing machine (figure 2).

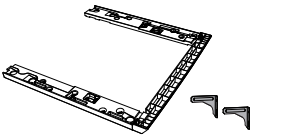

Stacking Brackets Wall fixed support

Style1

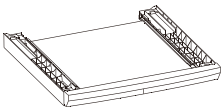

Stacking Brackets

Style2

a

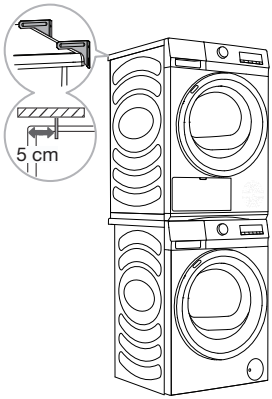

1

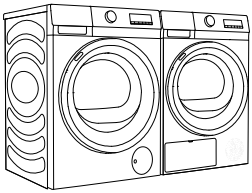

2

STACKING BRACKET (ACCESSORIES)

Please use original accessories. You can refer to the following recommendations for purchasing stacking brackets.

Dryer series	Dryer depth (D)	Washing machine series	Washing machine depth (D)	Matching Stacking Brackets
LE/LA	550mm	LE/LA	510mm/550mm	SKHNE80*（Style1）
LE/LA	640mm	LE/LA	590mm/640mm	WZXX0-BN****（Style2）

⚠ At least two persons are required to install the tumble dryer on top of a washing machine.

⚠ Do not place the dryer behind lockable or sliding door, or door with a hinge on the opposite side of the dryer door hinge. Install the dryer in such way that the door can always be freely opened.

⚠ Do not place the dryer on a carpet with long fibres as this may impede air circulation.

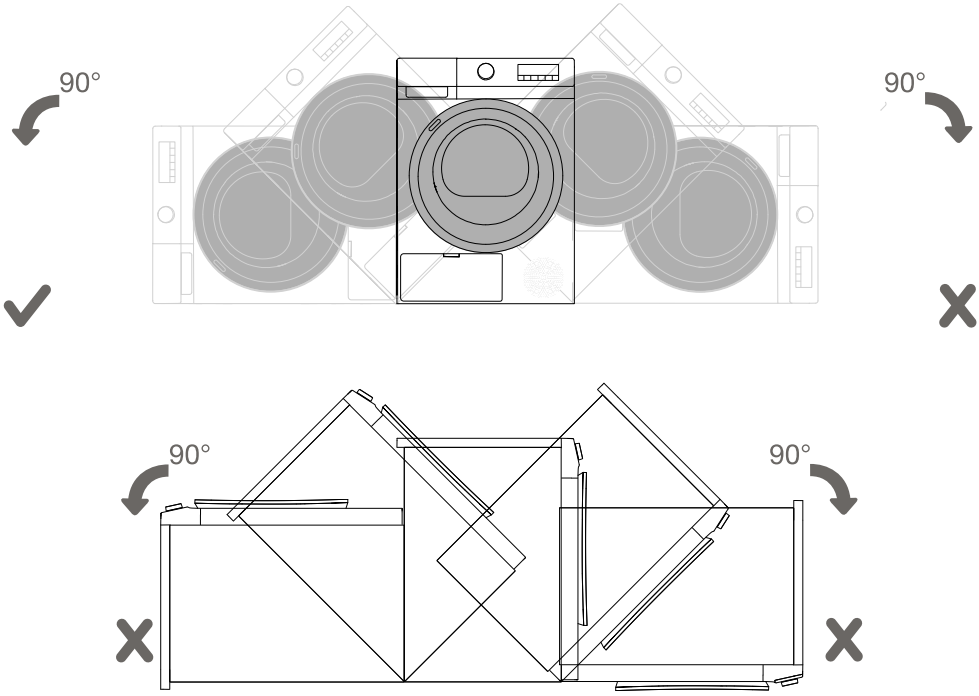

After installation, wait for 24 hours without moving the appliance before using it for the first time. If the dryer has to be laid down on one of the sides during transport or servicing, place it with its left side, viewing from the appliance front, downwards.

ADJUSTING THE DRYER FEET

Level the dryer in longitudinal and traverse direction by rotating the adjustable feet which allow levelling by 1cm. Use a spirit level and spanner No.22.

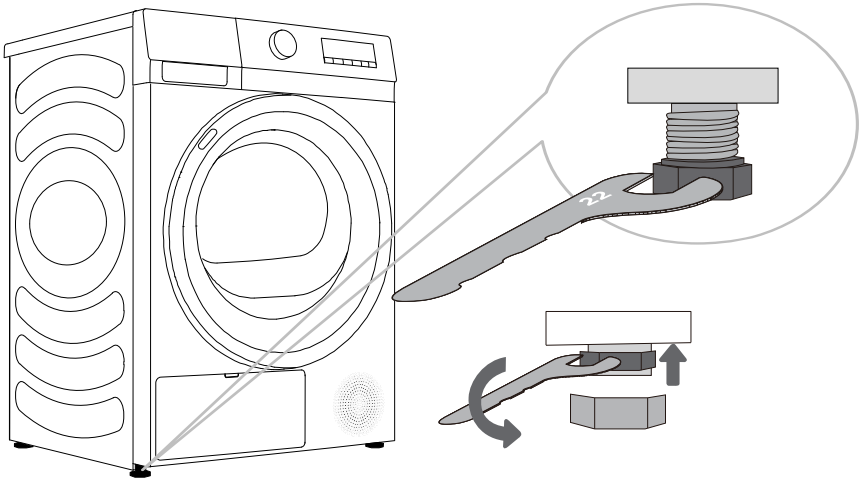

- Floor on which the dryer is placed must have a concrete base. It should be clean and dry; otherwise, the dryer may slide. Also clean the adjustable feet.

- The dryer must stand level and stable on a solid base.

- Incorrect levelling of the dryer with the adjustable legs may cause vibration, appliance sliding across the room, and loud operation. Incorrect levelling of the dryer shall not be subject to warranty.

- Sometimes, unusual or louder noise may appear during appliance operation; these are mostly the result of improper installation.

DRAINING THE CONDENSATE

The moisture from the laundry is extracted in the condenser unit and accumulated in the condensate tank.

During the drying process, an indicator light (symbol is lit on the display unit) warns when the condensate tank is full and needs to be emptied.

To avoid emptying the condensate tank, run the condensate discharge hose located at the back of the appliance directly into a drain.

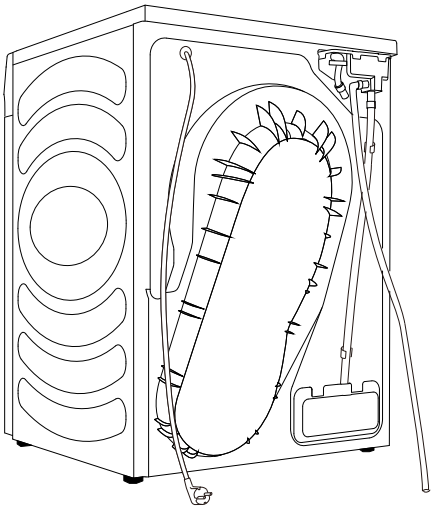

1 Remove discharge hose from the machine and hang it on the back.

2 Attach the hose in the attachment to the plastic opening on the discharge hose.

If you decide to run the condensate drain hose into a drain, make sure the hose is securely fastened. This will prevent any water spillage which could result in unexpected damage.

⚠ Always use the hoses supplied with the dryer.

CONNECTING TO THE POWER MAINS

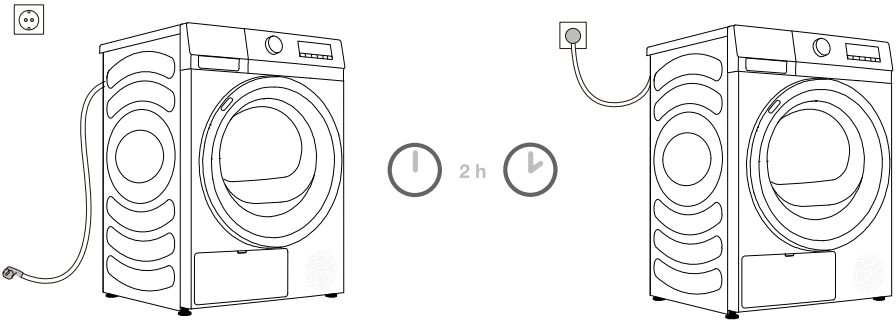

⚠ After installation, the dryer should stand still for two hours before it is connected to the power mains; this allows the dryer to stabilize.

Connect the dryer to a grounded power outlet. After installation, the wall outlet should be freely accessible. The outlet should be fitted with an earth contact (in compliance with the relevant regulations).

Information on your dryer is indicated on the rating plate (see chapter »DESCRIPTION OF THE DRYER/Technical information«).

⚠ We recommend using over-voltage protection to protect the appliance in case of a lightning strike.

⚠ The dryer may not be connected to the power mains using an extension cord.

Do not connect the tumble dryer to an electrical outlet intended for an electric shaver or a hair dryer.

Any repair and maintenance pertaining to safety or performance should be done by trained experts.

A damaged power cord may only be replaced by a person authorized by the manufacturer.

MOVING AND TRANSPORT AFTER INSTALLATION

After every drying cycle, a small amount of condensed water will remain in the dryer. Switch on the dryer and choose one of the programmes, then let the appliance operate for approximately half a minute. This will pump out the remaining water and prevent damage to the dryer during transport. If the dryer cannot be transported in the upright position, tilt it to the left side.

Pack all the packaging material (plastic bags, other plastic parts etc.).

⚠ **After transport, the dryer should be left to stand still for at least two hours before it is connected to the power mains. The appliance should be installed and connected by a trained technician.**

If the appliance was not transported in compliance with the instructions, the dryer should be left to stand still at least 24 hours before it is reconnected to the power mains.
Failure to do so may result in a heat pump failure which shall not be covered by the warranty.
Be careful not to damage the cooling system (see chapter »INSTALLATION AND CONNECTION/ Dryer placement«).

⚠ **Carefully read the instructions for use before connecting the dryer. Repair or any warranty claim resulting from incorrect connection or use of the dryer shall not be covered by the warranty.**

BEFORE USING THE APPLIANCE FOR THE FIRST TIME

Make sure the dryer is disconnected from the power mains; then, open the door by pulling the left side of the door towards you (figures 1 and 2).

Before using the dryer for the first time, clean the dryer drum using a soft damp cotton cloth and water (figure 3).

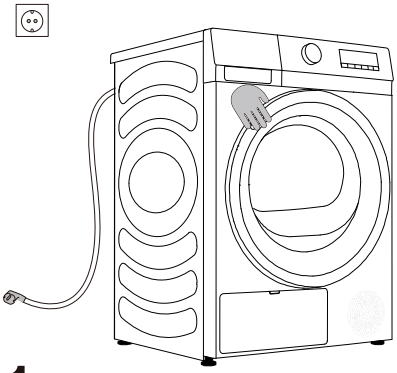

1

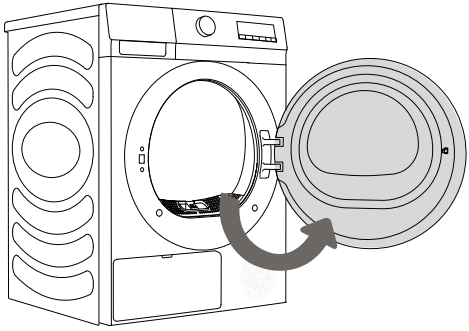

2

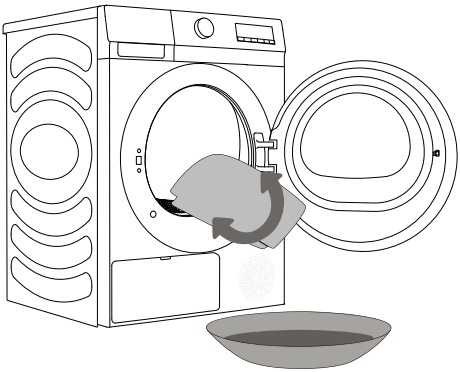

3

⚠ Do not use any solvents or cleaning agents that could damage the dryer (please observe the recommendations and warnings provided by the manufacturers of the cleaning agents).

DRYING PROCESS, STEP BY STEP (1 - 4)

STEP 1: HEED THE LABELS ON THE LAUNDRY

Normal wash; Sensitive laundry	Max. washing temp. 95°C 	Max. washing temp. 60°C 	Max. washing temp. 40°C 	Max. washing temp. 30°C 	Hand wash only 	Do not wash 
Bleaching	Bleaching in cool water 			Bleaching not allowed 		
Dry cleaning	Dry cleaning with all agents 	Petroleum solvent R11, R113 		Dry cleaning in kerosene, pure alcohol, and R113 	Dry cleaning not allowed 	
Ironing	Hot ironing, max. 200°C 	Hot ironing, max. 150°C 		Hot ironing, max. 110°C 	Ironing not allowed 	
Drying	Dry flat (place on a flat surface) 	Drip dry  Line dry 		High temperature  Low temperature 	Do not tumble dry 	

STEP 2: PREPARING FOR THE LAUNDRY DRYING PROCESS

1. Sort the laundry by type and thickness of the fabric (see PROGRAMME TABLE).
2. Close the buttons and zips, tie any ribbons, and turn the pockets inside out.
3. Place very sensitive clothes in a special-purpose laundry bag.
   (The special-purpose laundry bag is available as an optional accessory.)

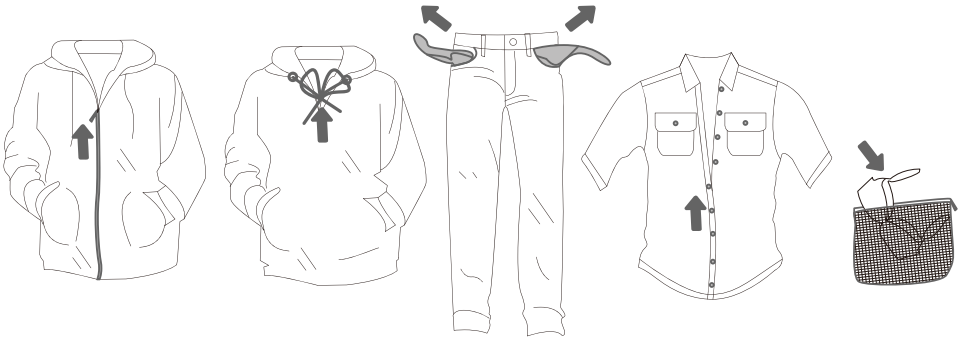

Drying laundry made of particularly delicate fabrics that may be deformed is not recommended. The following types of laundry may not be dried in the dryer as this may cause your garments to deform:

- **leather garments and other leather products;**
- **garments that are waxed or treated in any other way;**
- **garments with major wooden, plastic, or metal parts;**
- **garments with spangles;**
- **garments with metal parts subject to rusting.**

SWITCHING ON THE DRYER

Connect the dryer to the power mains by plugging in the power cord.
Press the ON/OFF button to switch on the dryer (figure 1).

With some models, the dryer drum is lit as well (figure 2).
(The light in the dryer drum is not suitable for any other use.)

The light in the dryer drum may only be replaced by the manufacturer, a service technician or an authorized person.

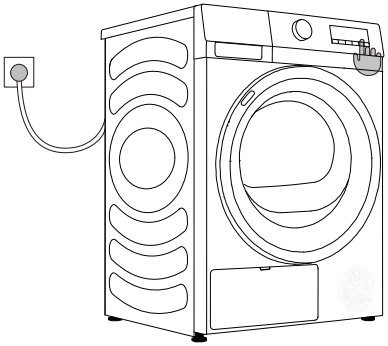

1

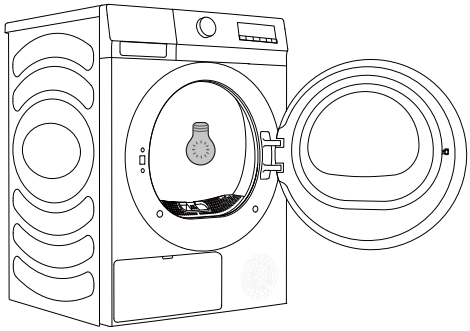

2

LOADING THE DRYER

Open the dryer door by pulling the left side of the door towards you (figure 1).
Insert the laundry into the drum (after making sure the drum is empty) (figure 2).
Close the dryer door (figure 3).

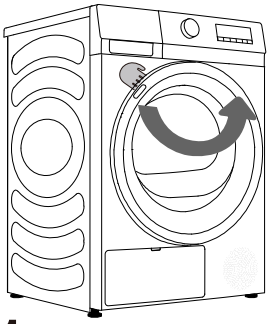

1

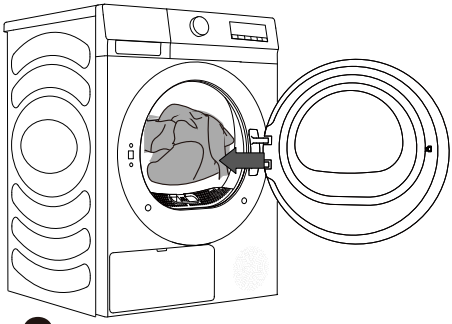

2

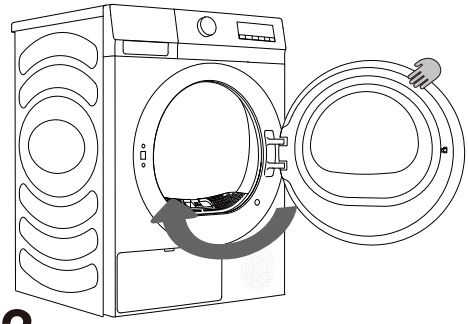

3

- When the dryer is running, you can directly open the door to add or remove clothes, and press the Start/Pause button to continue running after closing the door.

- Do not insert laundry into the dryer if it has not been wrung or spun (recommended minimum spinning cycle: 800 rpm).

Do not overload the drum! See PROGRAMME TABLE and observe your nominal load as indicated on the rating plate.
If the dryer drum is overloaded, the laundry will be more wrinkled and perhaps unevenly dried.

- When drying larger items (bedding, towels etc.), loosen them and then insert them into the dryer drum.

CONTROL UNIT

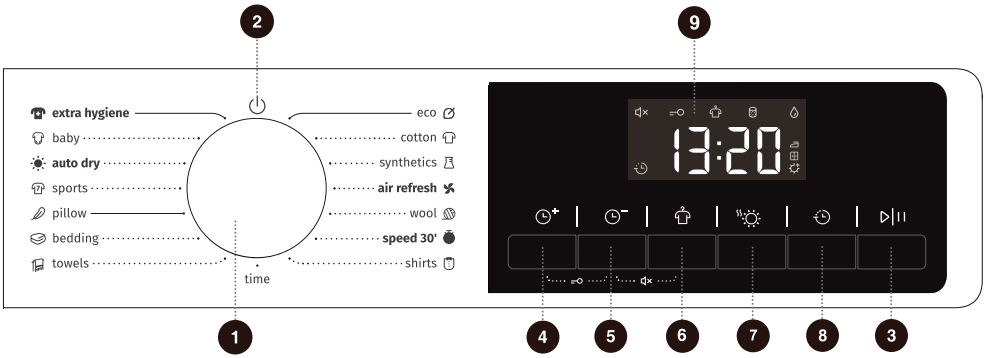

1 CYCLE SELECTOR

Turn the dial to select a cycle.

2 POWER

Rotate the programme selector knob to turn on/off the appliance.

3 START/PAUSE

Start/Pause the whole machine program running.

4 MORE TIME

Press to add drying time of the program.

5 LESS TIME

Press to reduce drying time of the program.

6 ANTI CREASE

Press to add or subtract Anti Crease function.

7 DRYING LEVEL

Press to select the drying effect.

8 DELAY END

Press to delay the end of the cycle.

9 DISPLAY

It is used to display the remaining time,fault code and other information of the program.

4+5 CHILD LOCK

Press these two keys at the same time to enable or disable the child lock function.

5+6 MUTE

Press these two keys at the same time to switch or restore the acoustic signals.

STEP 3: CHOOSING THE DRYING PROGRAMME

Choose the **programme** by rotating the programme selector knob(1) to the left or right (depending on the type of laundry and the desired level of dryness). See PROGRAMME TABLE.

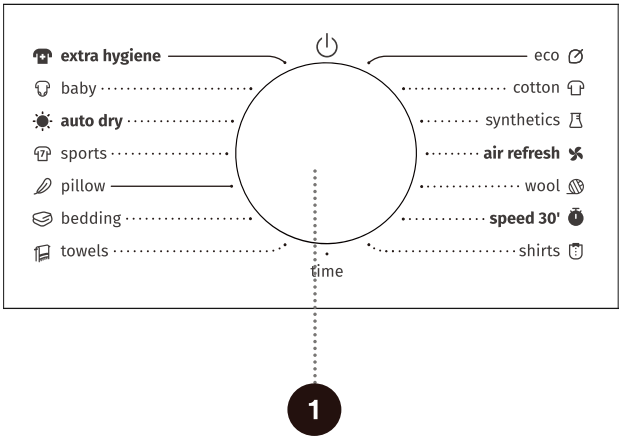

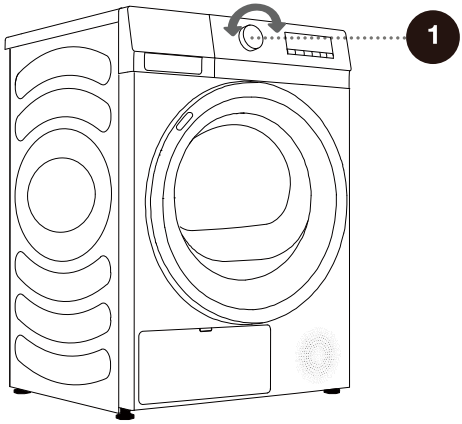

PROGRAMME TABLE

Maximum capacity (kg)

Sensor dry programmes

Programme	Type of clothes		
		8	9
eco	Use this programme for drying of ordinary cotton clothes.	8	9
Cotton	Use this programme for thicker non-sensitive cotton laundry of approximately the same thickness.	8	9
Synthetics	The programme is used for drying delicate laundry made of synthetics fibres.	4	4.5
Quick 30'	For quick drying of light and thin clothes.	0.5	0.5
Shirts	Use this programme to dry shirts and blouses.	2	2
Towels	Use this programme for drying non-sensitive items(towels, cloths...). After drying, the items wil be dry and ready to be stored in the cupbord.	4	4.5
Bedding	Use the programme for larger items.When the programme is complete,it will be dry. Adjusted drum rotation prevents the laundry from tangling.	2.5	2.5
Downwear	Use this programme to dry textiles stuffed or padded with down(pillows, downwear, jackets etc.).Dry large items separately and use the Time Dry programme if necessary.	2	2
Sportswear	Use this programme for clothing with a mambrane,for sportswear made of mixed materials,and breathable fabrics..	2	2
Auto Dry	Use this program for thicker non-sensitive cotton laundry of approximately the same thickness.After drying,it will be dry or slightly moist.	4	4.5
Baby Care	Use this programme to dry baby clothes.Clothes dried with this programme are usually normally dry.	2	2

The Eco programme is equivalent to standard cotton programme in regulation (EU) No 932/2012.

Manual and special dry programmes

Programme	Type of clothes	Maximum capacity (kg)	
		8	9
Refresh	In this programme,the heater is switched off.The programme is suitable for refreshing your laundry.	/	/
Wool	This short program is intended for softening or fluffing of dried clothes made of wool or silk.	1	1
Time Dry	Use this programme for non-sensitive laundry that is still slightly moist and has to be thoroughly dried. In the time programme, remaining moisture is not detected automatically. If the laundry is still damp after the programme is complete, repeat the programme; if it is too dry and therefore creased and rough to touch, the drying time you selected was too long.	/	/
Allergy Care	For removing allergens such as mites.	2	2

If your laundry is not dried to the desired dryness level, use extra functions or use a more suitable programme.

STEP 4: SELECTING ADDITIONAL SETTINGS AND FUNCTIONS

Most programmes feature basic settings, but these settings can be changed.

Adjust the settings by pressing the relevant function button (before pressing the START/PAUSE button).

Activate/deactivate the functions by pressing the desired function (before pressing the START/PAUSE button).

Certain settings cannot be selected with some programmes. Such settings will not be lit, and when the corresponding button is pressed, an acoustic signal will be emitted (see FUNCTION

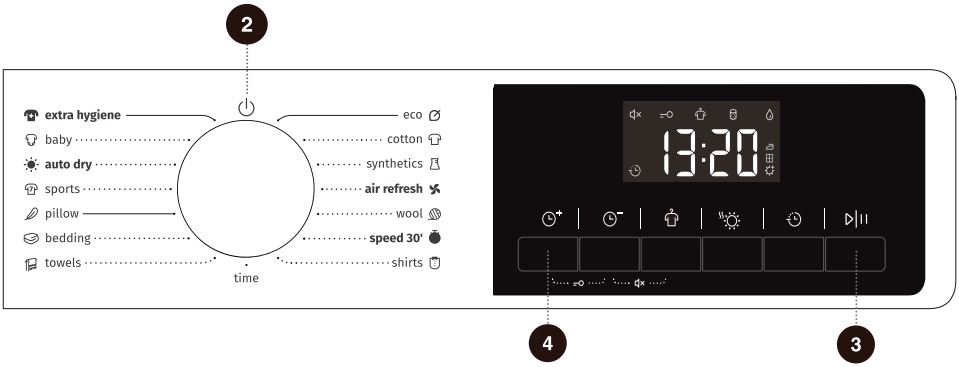

2 POWER

For powering on/off the dryer.
During the program operation, if it needs to be turned off, turn the knob to the " off " position to turn it off.
In standby mode, if no action is taken within a few minutes, the appliance will automatically shut down.

3 START/PAUSE

Press the "Start/Pause" key to pause or start the program.
When the program is suspended, the set functions cannot be changed.
If the program or function needs to be changed during operation, turn the knob to "off ", then turn the knob again to select the required program and function, and finally start it.

4 MORE TIME

This function can add drying time of the program.
Press continuously to cycle through the set tap positions. Different programs have different tap position settings.

This function is only applicable to the manual and special dry programs. Sensor dry programs cannot be started.



5 LESS TIME

This function can reduce drying time of the program.
Press continuously to cycle through the set tap positions. Different programs have different tap position settings.

This function is only applicable to the manual and special dry programs.
Sensor dry programs cannot be started.

6 ANTI CREASE

Press to add "Anti Crease" function, press twice to cancel the function, and cycle in sequence.

If the clothes cannot be taken out in time after drying, select the anti crease program. At this time, the inner drum rotates intermittently to prevent clothes from creasing.

Touch any key or open the door to exit the anti crease mode.
If there is no operation, the longest execution will end automatically after 12 h by default.

7 DRYING LEVEL

For selection of drying effect.

【 】Extra, means the clothes can be stored after drying.

【 】Very, means the clothes can be worn immediately after drying.

【 】Iron, means the clothes has a small amount of water and can be ironed.

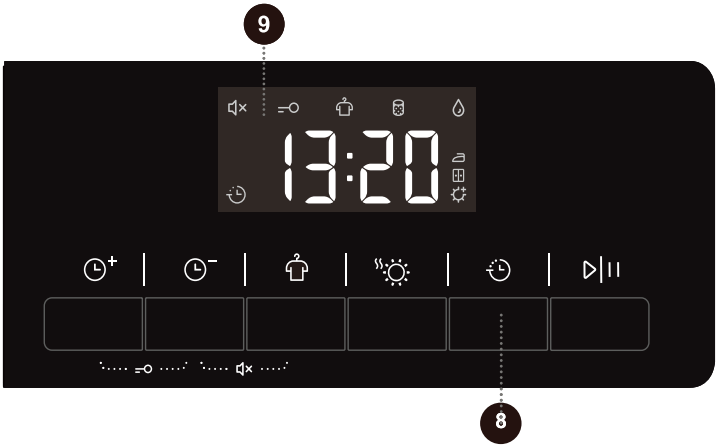

8 DELAY END

This function can delay the end time of the program.

Make an appointment after selecting programs and functions. Press the appointment button to add or reduce the appointment time. The time changes by 1 hour for each press, and the maximum optional time is 24 hours.

The appointment time is the end time of the program, including the running time of the whole program, so the appointment time must be longer than the running time of the program.

When the Delay End function is being selected (set), the Clock icon is lit up;
When the Delay End programme is running, the Clock icon always on or flashes （depends on the model）.

After the appointment process ends, the appointment icon goes out.

Before the program starts, the selected appointment can be canceled by selecting other programs or function keys.

After the program is started, in case of canceling the appointment, shut down and restart the dryer.

9 DISPLAY

It is used to display the remaining time, appointment time, fault code and

The time displayed by the program may be different from the actual running time. Due to the influence of type of clothes, load of clothes, water content after dehydration, and ambient temperature, the actual drying time will be automatically adjusted. When the program ends, "End" will be displayed.

Icon description

	Anti crease icon. When the icon is lit up, it indicates that the anti crease function is enabled.
	Lint and debris cleaning icon. The flashing icon indicates that the lint and debris needs to be cleaned.
	Water box cleaning icon. The flashing icon indicates that the water box needs to be emptied.

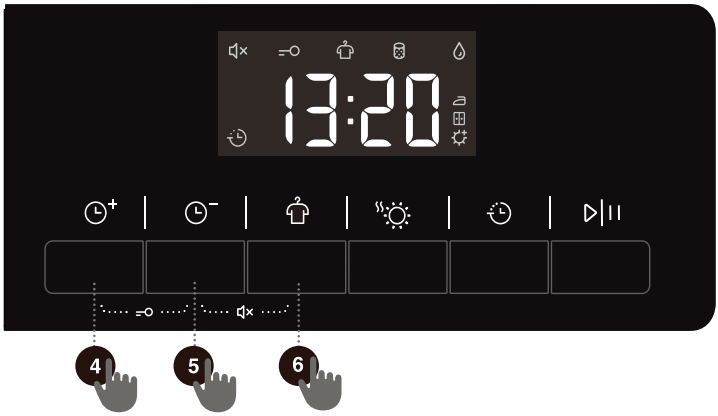

4 + 5 Child Lock

This is a safety feature. To activate it, simultaneously press the positions "More Time + Less Time" until the Child Lock icon light up, and then Child Lock is set up. Repeat the same operation, the Child Lock will be released.
When the Child Lock is set, all function buttons will be shielded except the power button.
After completing program, child lock will automatically unlock.

The Child Lock feature includes a memory function, and the setting will remain effective unless it is manually activated or deactivated.

After the child lock function is enabled: During running in anti crease mode, the child lock needs to be released manually, and the anti crease function ends automatically.

5 + 6 Mute

Use this to switch off or restore the acoustic signals.
When the appliance is in the state of holding, pause or operation, press "Less Time + Anti Crease" buttons until the display show mute function icon. All the buzzing will be turned off except the alarms.
When the appliance is in the mute state, repeat the same operation until mute function icon light off. All the buzzing will be activated.

The Mute feature also includes a memory function and the setting will remain effective unless it is manually turned on or off.

FUNCTION TABLE

Programs	MORE TIME	LESS TIME	ANTI CREASE	DRYING LEVEL	DELAY END
eco	×	×	○	×	○
Cotton	×	×	○	○	○
Synthetics	×	×	○	○	○
Refresh	○	○	○	×	○
Wool	○	○	○	×	○
Quick 30′	×	×	○	×	○
Shirts	×	×	○	○	○
Time Dry	○	○	○	×	○
Towels	×	×	○	○	○
Bedding	×	×	○	○	○
Downwear	×	×	○	○	○
Sportswear	×	×	○	○	○
Auto Dry	×	×	○	○	○
Baby Care	×	×	○	○	○
Allergy Care	○	○	○	×	○

○ Optional functions

× Can not be selected

MAINTENANCE & CLEANING

⚠ Before cleaning, make sure to switch off the dryer and disconnect it from the power mains (unplug the power cord from the outlet).

The dryer is fitted with a **filtering system** consisting of several filters that prevent any impurities from entering the heat exchanger system.

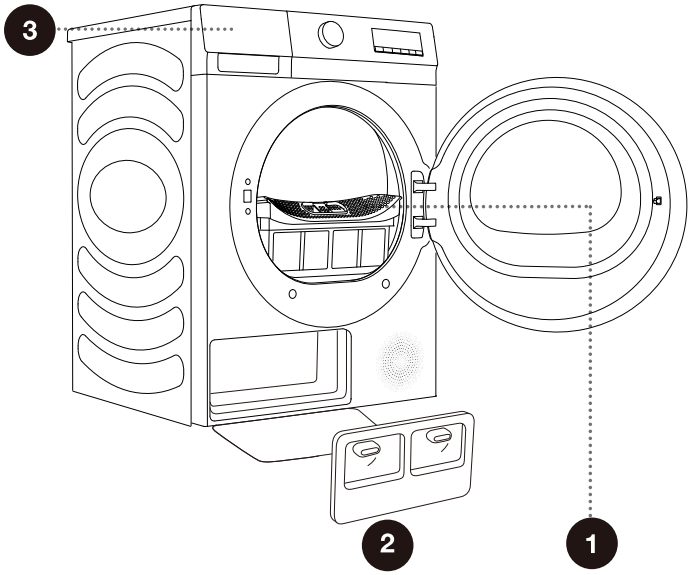

1 Net filter

2 Heat exchanger door cover

3 Condensate tank

The dryer may never be operated without the filters in place or with damaged filters, as excessive amount of accumulated fibres from the fabric could cause malfunction or failure of the dryer.

CLEANING THE NET FILTER IN THE DOOR

Clean the net filter after each drying cycle.

Excessive fluff accumulated on the filter screen will affect the drying effect. Please clean the filter screen after each use.

After cleaning, be sure to reinstall the filter screen in place before use.

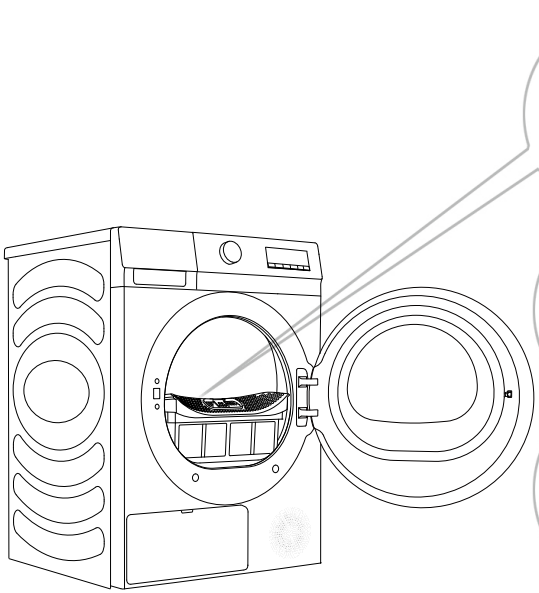

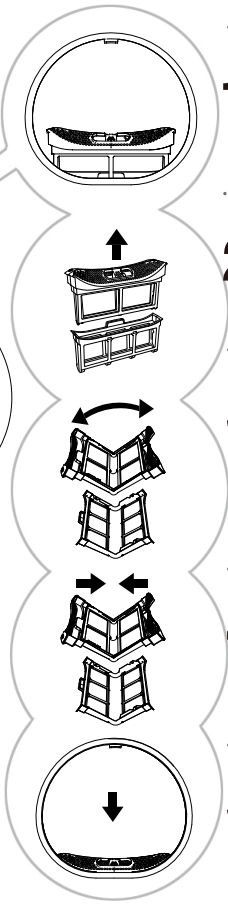

1 Pull out the net filter.

2 Pull out the inner filter.

3 Open the net filter and clean the fluff of the two-layer filter screen with a wet towel or flowing water.

4 Close the net filter, if necessary, clean the door gasket as well.

5 After cleaning the net filter, reassemble it. Install the net filter to the front support.

Make sure you do not pinch your fingers with the filter cover.

CLEANING OF THE HEAT EXCHANGER

During cleaning, some water may be spilled. It is therefore recommended to place an absorbent cloth on the floor.

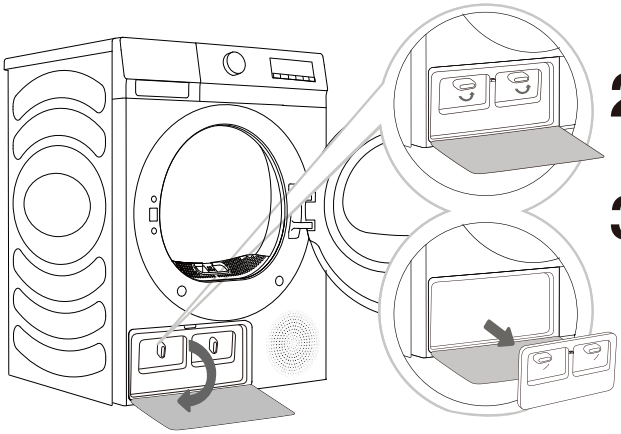

1 Press the buckle of the heat exchanger door cover at the lower left to open the door cover.

2 Turn the locking knob of the cover to unlock position.

3 After using for a period of time, if there is dust on the heat exchanger, please remove the dust with tools. Do not touch the heat exchanger directly with your hands to avoid in jury.

4 Install the inner door cover to the origin positions,lock the knob and close the heat exchanger door cover.

⚠ Do not touch the inner metal parts of the heat exchanger with bare hands. Danger of injury on sharp parts. Use appropriate protection gloves when cleaning the heat exchanger.

⚠ Incorrect cleaning of the metal fins of the heat exchanger can permanently damage the tumble dryer. Do not press on the metal fins with hard objects like for example the plastic tube of a vacuum cleaner.

The dust and dirt in the metal fins of the heat exchanger can be cleaned with tools vacuum cleaner, soft brush etc..

Without pressing, gently move the brush attachment only in the direction of the metal fins from top to bottom. Too much pressure can damage or bend the metal fins of the heat exchanger.

We recommend you clean the heat exchanger at least every twenty times.

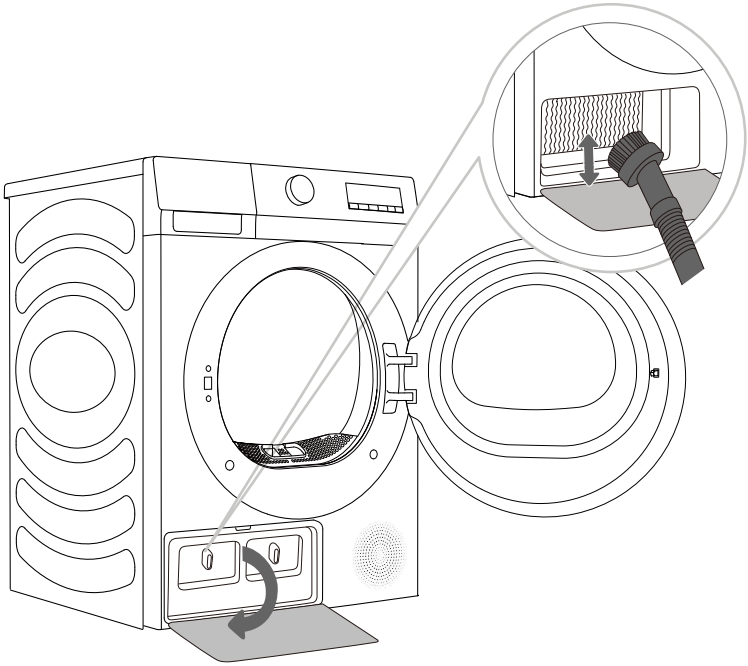

EMPTYING THE CONDENSATE TANK

Empty the condensate tank after each drying cycle.

If the condensate tank is full, the drying programme will be paused automatically.
Symbol will light up on the display unit, indicating that the condensate tank should be emptied.

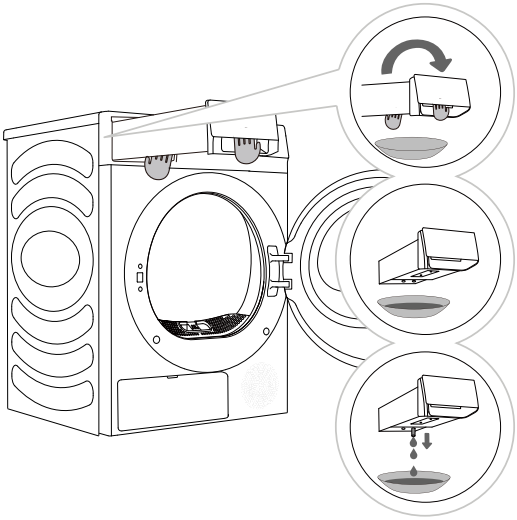

1 Remove the condensation tank from the dryer.Pull the water tank handle with one hand until the tank is halfway out. Once the water tank is halfway out, support the bottom with your other hand and continue pulling slowlywith both hands.

2 Empty the water through the drain hole , and then clean inside the water tank. Mix some neutral detergent in lukewarm water. Fill the water tank with the mixture through the drain hole and leave it for 30 minutes. Then, rinse the tank with clean water and completely dry it.

3 Reinsert the condensation tank back into place.

Water from the condensate tank is not potable. If thoroughly filtered, it can be used for ironing.

⚠ Never add chemicals or fragrances into the condensate tank.

The water tank is heavy. Slowly remove the water tank using both hands while keeping the tank at a level.

Be careful when removing the full water tank. It is very heavy and can cause injury if you drop it.

NOTE: If the dryer displays an "" information code and stops during a drying cycle, empty the water tank and press Start/Pause. The " " information code will disappear, and the dryer will resume drying.

It is not necessary to empty the condensate tank if the drain hose is connected directly to a drain (see chapter »INSTALLATION AND CONNECTION/Draining the condensate«).

CLEANING THE DRYER

⚠ **Always disconnect the dryer from the power mains before cleaning.**

Clean the dryer exterior using a soft damp cotton cloth.

⚠ Do not use any solvents or cleaning agents that could damage the dryer (please observe the recommendations and warnings provided by the manufacturers of the cleaning agents).

Wipe all parts of the dryer with a soft cloth until dry.

Do not clean the dryer with a jet of water!

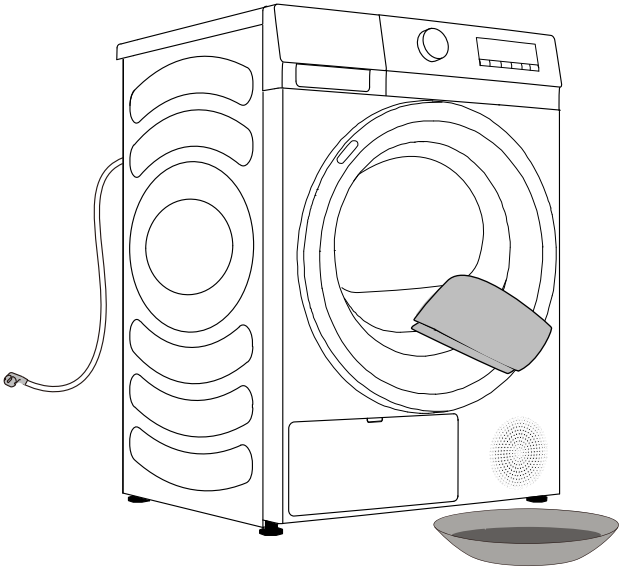

TROUBLESHOOTING

WHAT TO DO ...?

Disturbances from the environment (e.g. the power grid) may result in various error reports (see TROUBLESHOOTING TABLE). In such case:

- Switch off the dryer and wait at least one minute.
- Switch on the dryer and repeat the drying programme.
- Most errors during operation can be resolved by the user (see TROUBLESHOOTING TABLE).
- If the error persists, call an authorized service unit.
- Repairs may only be carried out by an adequately trained person.
- Repair or any warranty claim resulting from incorrect connection or use of the dryer shall not be covered by the warranty. In such cases, the costs of repair shall be charged to the user.

The warranty does not cover the errors or failures resulting from disturbances from the environment (lightning strike, power grid failures, natural disasters etc.).

TROUBLESHOOTING AND ERROR TABLE

Fault phenomenon	Recommended handling method
The dryer cannot be started	◇ Check the power connection; ◇ Confirm the "Start Pause" key is pressed down; ◇ Confirm the door is closed properly; ◇ House fuse is blown, circuit breaker has tripped, or power outage has occurred.
The dryer cannot be started and displays "End"	◇ Check whether the program setting is correct; ◇ Confirm there are clothes in the drum;
Excessive drying time	◇ Check whether the program setting is correct; ◇ Confirm whether there are too many clothes wrapping into clusters; ◇ Check whether the filter screen is cleaned; ◇ There will be air supply for cooling after drying in some programs;
Poor drying effect	◇ Confirm that the clothes have been dehydrated; ◇ Check whether the program setting is correct; ◇ Confirm that there are too many clothes; ◇ Load is not properly sorted. Whether clothes that are not easy to dry are mixed with clothes that are easy to dry; ◇ Large load of heavy fabrics. ◇ Check whether the filter screen is cleaned;
The remaining time of the display stops or jumps	◇ The remaining time varies with clothing type, load, dehydration and ambient temperature, which is a normal phenomenon;
Clothes are wrinkled.	◇ Clothes have dried too long. Try a shorter drying time. ◇ Clothes have been left in the appliance for too long after cycle ends.
The dryer display shows running time different from actual program duration.	◇ For programs that stop automatically when clothes are dry, the drying duration displayed is calculated according to standard environment, initial laundry moisture, load mass and type. The drying time is automatically adjusted for any change in conditions. The difference between the actual time and the display time is normal, which ensures the best drying effect.

Fault phenomenon	Recommended handling method
The dryer is too loud.	◇ Look for coins, loose buttons, nails, and other objects and remove them immediately. ◇ Check the lint filter. Remove any items stuck inside the lint filter. ◇ Make sure the dryer is level and standing firmly on the floor. ◇ The dryer may hum due to air moving through the drum and fan. This is normal.
Clothes are shrinking.	◇ Garment care instructions are not being followed. Use a low or no heat setting.
Lint is left on clothes.	◇ Lint filter has not been cleaned properly. ◇ Clothes have not been sorted properly. ◇ Some fabrics cause more lint and should be dried separately from fabrics that lint attaches easily. ◇ Tissue, paper, etc., has been left in pockets.
The appliance has an odour.	◇ The smell is caused by rubber material that is attached to the appliance inside. This kind of smell is a rubber's own smell and disappears automatically after using the appliance several times. ◇ When washing the clothes, use the detergent in accordance with the manufacturers recommendations. If you use the detergent excessively not according to the recommendations, undissolved detergent may accumulate on the clothes and cause an odour. ◇ You can smell odours from the clothes if the clothes were left in the appliance after drying or in the washing machine after washing. Unload the clothes promptly at the end of the drying or washing cycle. ◇ Ensure you can smell same odour in the washing machine. If so, clean the tub of the washing machine referring to the washing machine user manual. ◇ Always take care of both lint filters clean. If any residues were left in the lint filter after drying, it may cause odours. And also dry the lint filter completely after cleaning.
The machine is powered on and started directly after power failure, but does not work	◇ When the program is suspended, the set functions cannot be changed. If the program or function needs to be changed during operation, or the power is off during operation and the power needs to be powered on again, select the requirred program and function, and finally start it.

Code	Interpretation	Recommended handling method
F50/F51	Abnormal sensor	◇ Please contact after-sales service.

SERVICING

Before calling a service technician

When you contact a service centre,please state your dryer type.

Type ,code/ID, model,and serial number are indicated on the rating plate.

⚠ In case of a failure, only use approved spare parts by authorized manufacturers.

⚠ Repair or any warranty claim resulting from incorrect connection or use of the dryer shall not be covered by the warranty. In such cases, the costs of repair shall be charged to the user.

TYPICAL CONSUMPTION TABLE

Programme Instructions

The table indicates the power consumption and time values for drying of a test batch of laundry with various loads and after washing machine spinning .

The following requirements apply to the consumption values specified below.

Inlet air temperature	room temperature
Inlet air humidity	50–60%
Drying temperature	Normal

Program	Rated Capacity (kg)		Spinning (rpm)	Pogram Consumption (kWh/cycle)		Pogram duration (h:m)		Final Moisture Content (%)
	8kg	9kg		8kg	9kg	8kg	9kg	
Eco	8	9	/	1.80	1.83	3:28	3:29	1.5
Synthetics extra	4	4.5	1000	0.75	0.78	1:24	1:18	0.5
Synthetics iron	4	4.5	1000	0.51	0.54	0:58	0:57	10
Cotton extra	8	9	1000	2.27	2.49	3:52	3:49	0.5
	4	4.5	1000	1.31	1.37	2:18	2:11	0.5
Cotton iron	8	9	1000	1.58	1.74	2:44	2:40	10
	4	4.5	1000	0.86	0.91	1:33	1:27	10
Wool	1	1	/	0.22	0.22	0:30	0:30	1.0

1. The values given for programs other than the Eco program are indicative only;
2. Results of Wool program is based on wool load with 5% initial moisture content.
3. The Eco program is suitable to dry wet cotton laundry, and that this program is used to assess the compliance with the EU ecodesign legislation.
4. The Eco program is the most efficient program in terms of energy consumption for drying wet cotton laundry.
5. Loading the household tumble dryer up to the maximum capacity indicated by the manufacturer for the respective programs will contribute to energy savings.
6. At full load of Eco program，acoustic airborne noise emission of the drying cycle: 64dB.
7. The product information and QR code are reflected in the energy consumption labelthe product registration information can be obtained by scanning the QR code.
8. The power consumption of the off-mode is 0.5W. Time on switching automatically to off-mode：10min.

Due to deviations in terms of type and amount of laundry, spinning, power supply oscillation, and environment temperature and humidity, the values measured at the user may differ from the one stated in the table.

We reserve the right to any changes and errors in the instructions for use.

TIPS FOR DRYING AND ECONOMIC USE YOUR DRYER

The most economical way of drying is to dry the recommended amount of laundry in each batch (see PROGRAMME TABLE).

Drying laundry made of particularly delicate fabrics that may be deformed is not recommended.

Use of conditioner in the washing cycle is not necessary as the laundry is soft and smooth after drying in the dryer. Drying time will be shorter and power consumption will be lower if the garments are thoroughly wrung or spun before drying. By selecting the appropriate drying programme, you will avoid over-drying your laundry and problems with ironing or shrinkage of fabric.

Regular cleaning of the filters will lead to optimum drying time and minimum power consumption.

When drying smaller amounts of laundry or individual garments, the sensor may not perceive the actual level of moisture in the laundry. In such cases, it is recommended to dry smaller items or amounts with programmes for dryer laundry or with the timed programme.

DISPOSAL

Packaging is made of environmentally friendly materials that can be recycled, disposed of, or destroyed without any hazard to the environment. To this end, packaging materials are labelled appropriately.



The symbol on the product or its packaging indicates that the product should not be treated as normal household waste. Take the product to an authorized collection centre for waste electric and electronic equipment processing.

When **disposing** of the dryer at the end of its useful life, remove all power cords, and destroy the door latch and switch to prevent the door from locking or latching (child safety).

Correct **disposal** of the product will help prevent any negative effects on the environment and health of people, which could occur in case of incorrect product removal. For detailed information on removal and processing of the product, please contact the relevant municipal body in charge of waste management, your waste disposal service, or the store where you bought the product.