Overview

HP EliteDesk 8 Mini G1i Desktop AI PC

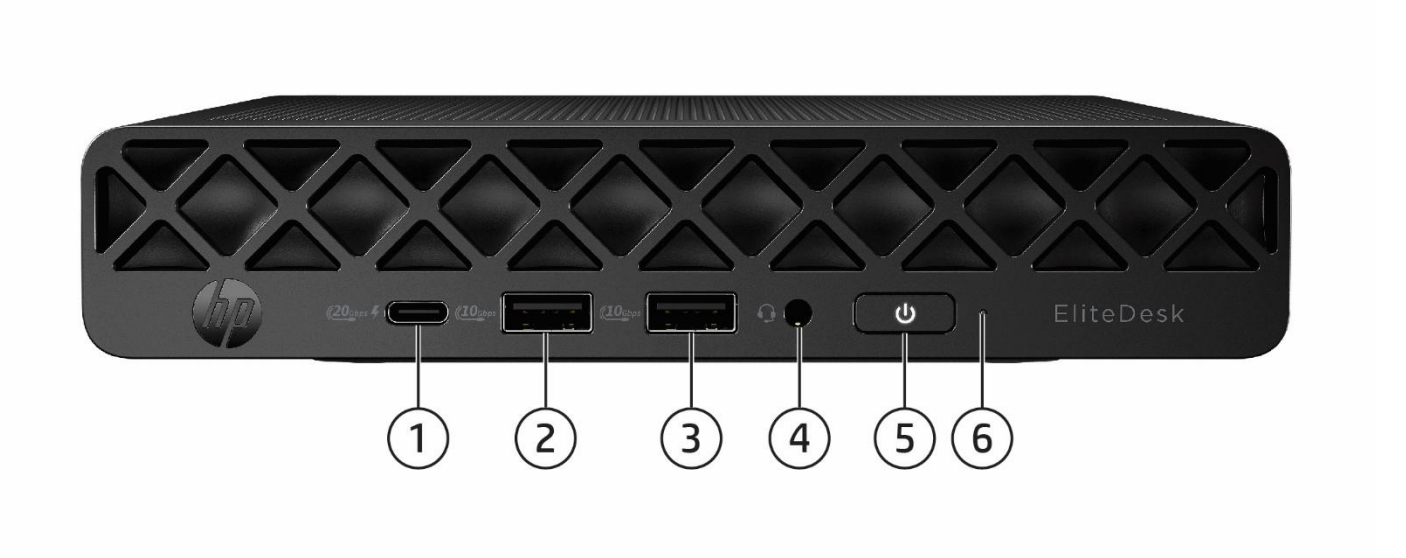

1. Type-C® SuperSpeed USB 20Gbps signaling rate port (charge support up to 5V/3A)
2. Type-A SuperSpeed USB 10Gbps signaling rate port
3. Type-A SuperSpeed USB 10Gbps signaling rate port
4. Combo Audio Jack with CTIA and OMTP headset support
5. Dual-state power button
6. SSD activity light

Overview

HP EliteDesk 8 Mini G1i Desktop AI PC

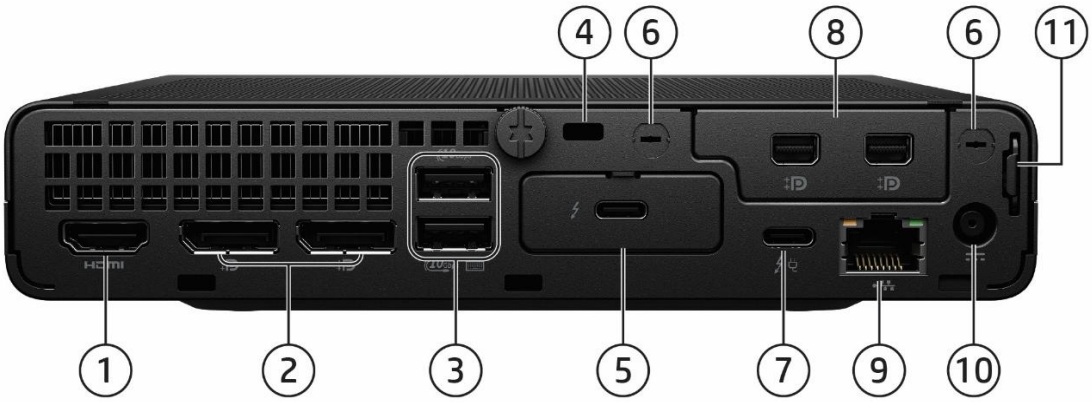

1. HDMI port 2.1TMDS 6Gbps
2. (2) Dual-Mode DisplayPort™ 2.1 HBR3 (DP++)
3. (2) Type-A SuperSpeed USB 10Gbps signaling rate port (Supporting wake from S4/S5 with keyboard/mouse connected and enabled in BIOS)
4. Standard cable lock slot (10 mm)
5. (1) Flex Port 1, choice of:
   - HDMI 2.1
   - VGA
   - DisplayPort™ 2.1
   - Fiber NIC 1Gbps[1]
   - Serial[2]

   - Intel® I226V 2.5 Gigabit Network Connection LOM (non-vPro)
   - Dual Type A SuperSpeed USB 5Gbps signaling rate port
   - Dual USB Type C 20Gbps
   - Thunderbolt 4.0 (shown in the image)
6. External WLAN antenna opening[3]
7. TBT4 with Alt mode and 100W Power in
8. (1) Flex Port 2[3], choice of:
   - Serial
   - HP video port extender (shown in the image)
   - Dual Type-A SuperSpeed USB 5Gbps signaling rate port
   - NVIDIA® GeForce RTX™ 5050 discrete Graphics
9. RJ-45 network connector
10. Power connector
11. Retractable Padlock loop

Not shown

Slots
(1) Internal M.2 2230 connector for WLAN
(3) Internal M.2 SSD storage 2280 connector[4]

Mounting
Support for
- Dual VESA Sleeve V4 Standalone
- Quick Release Bracket
- B200/B300/B500/B550/B560/B600 Mounting bracket
- Integrated Work Center Stand
- HP Single Monitor Arm

1. Fiber NIC 1Gbps cards would not be available in some selected Europe countries and Korea.
2. Sold separately or as an optional feature - Not sold in every region.
3. Must be configured at time of purchase.
4. 3rd SSD must be configured at the time of purchase

NOTE: SPO (Single Power On) feature only available when platform config in 35W CPU with Thunderbolt cable plugged in native Thunderbolt port via selected HP series 7 pro monitors or HP series 5 pro monitors.
NOTE: Thunderbolt flex module does not support SPO (Single Power On) feature.

Overview

HP EliteDesk 8 SFF G1i Desktop AI PC

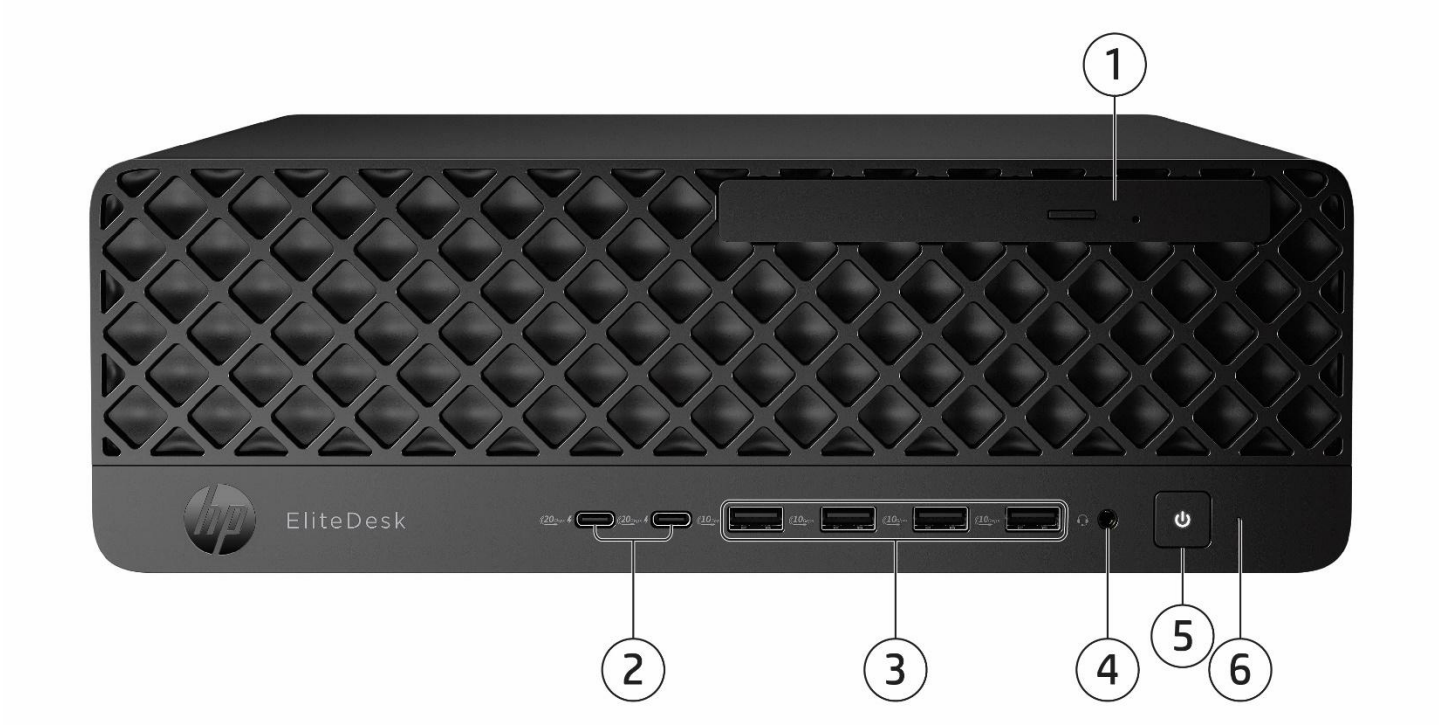

1. Slim optical drive (optional)
2. (2) Type-C® SuperSpeed USB 20Gbps signaling rate port (charge support up to 5V/3A)
3. (4) Type A SuperSpeed USB 10Gbps signaling rate port
4. Combo Audio Jack with CTIA and OMTP headset support
5. Dual-state power button
6. Hard drive activity light

Not shown

(1) PCI Express Gen4 x16

(1) PCI Express Gen4 x4

(4) M.2 (1 as M.2 2230 socket for WLAN/Bluetooth® and 3 as M.2 2280 socket for storage, slot2 toolless)

Overview

HP EliteDesk 8 SFF G1i Desktop AI PC

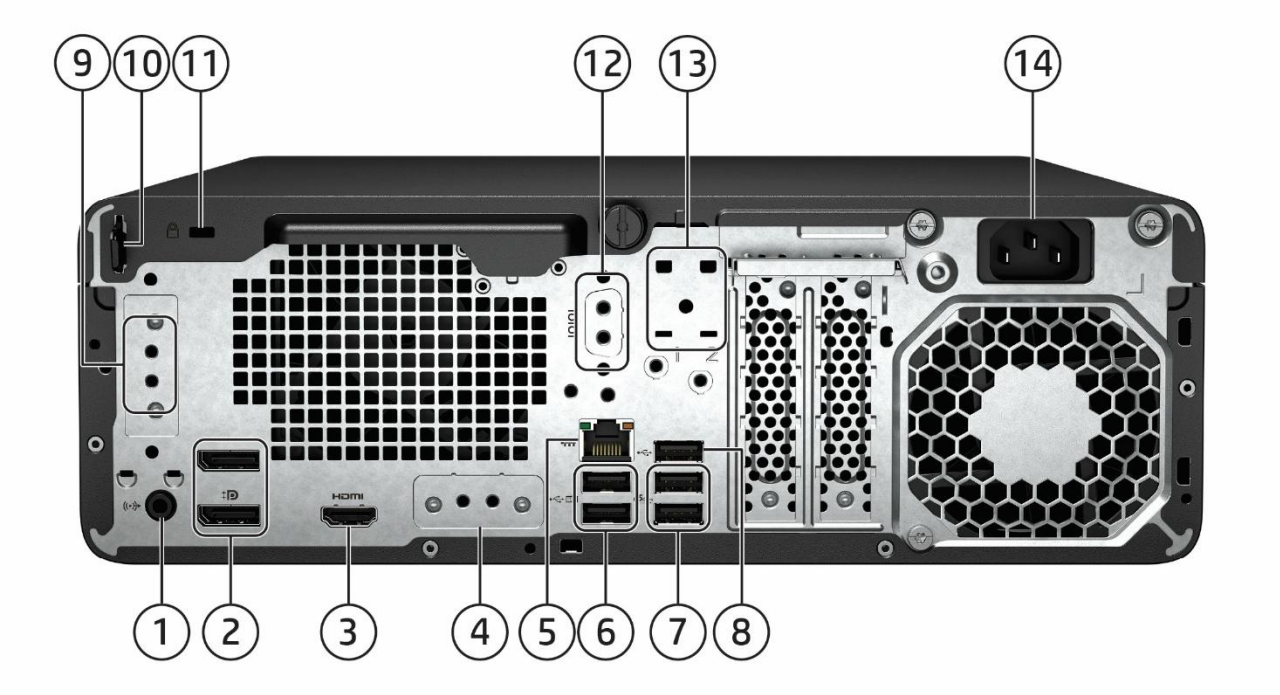

1. Audio line-out jack (supports line-in re-tasking)
2. (2) Dual-Mode DisplayPort™ 2.1 HBR3 (DP++)
3. HDMI port 2.1
4. Flex port, choice of:
   - DisplayPort™ 2.1
   - HDMI 2.1
   - VGA
   - Fiber NIC 1Gbps
   - Thunderbolt™ 4
   - Serial
   - Dual Type-A SuperSpeed USB 5Gbps signaling rate port
   - Dual Type-C SuperSpeed USB 10Gbps signaling rate port
   - USB-C® SuperSpeed 10Gbps signaling rate port (Alt Mode DP 1.4 with 15W output)
5. RJ-45 network connector
6. (2) Type A Hi-Speed USB 480 Mbps signaling rate port with wake from S4/S5
7. (2) Type A SuperSpeed USB 5Gbps signaling rate port
8. (1) Type-A Hi-Speed USB 480Mbps
9. Flex port 2, choice of:
   - Dual Type-A SuperSpeed USB 5Gbps signaling rate port
   - Serial
10. Padlock loop
11. Standard cable lock slot
12. Serial port (optional)
13. Solenoid lock
14. Power cord connector

Not shown

Optional Ports

Optional Parallel port[1]

Optional 4 Serial Port PCIe Card[1]

Bays

(1) 3.5” internal storage drive bay[2]

(1) Slim optical drive bay (ODD or removable storage)[3]

1. Each of the legacy port options would occupy one rear slot.
2. The system does not come with HDD bay when the hard drive/ODD is not configured.
3. For future HDD/ODD installation, the HDD expansion module must be added to support a single 3.5” HDD.

Overview

HP EliteDesk 8 Tower G1i / G1i E Desktop AI PC

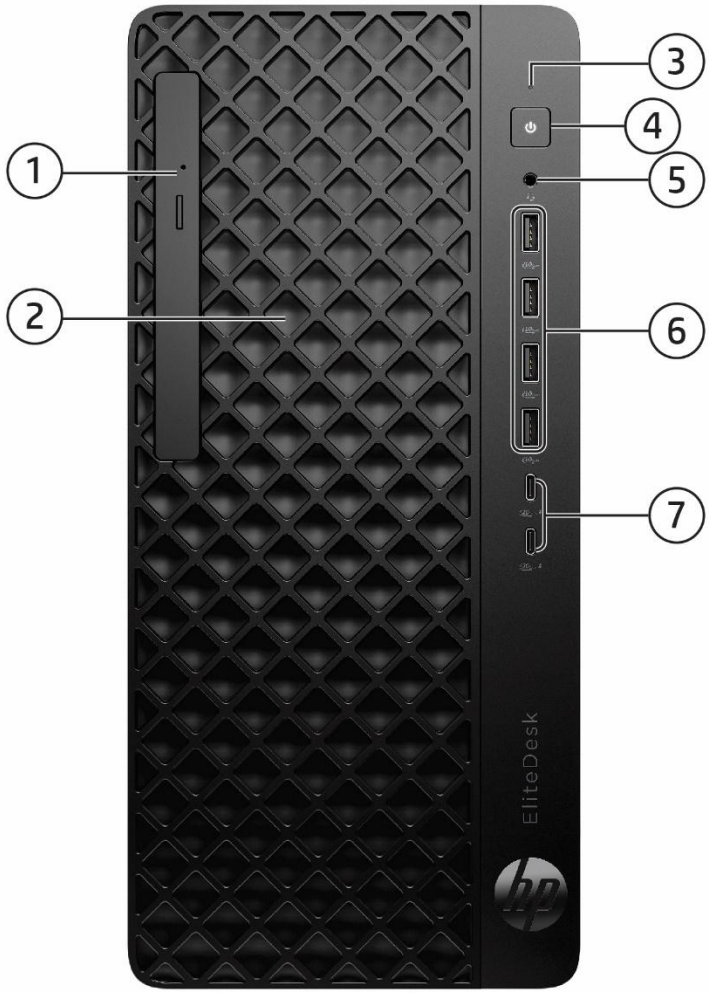

1. Slim optical drive bay (optional)
2. Slim optical bay for M.2 SSD (optional)
3. Hard drive activity light
4. Dual-state power button
5. Combo Audio Jack with CTIA and OMTP headset support
6. (4) Type-A SuperSpeed USB 10Gbps signaling rate port
7. (2) Type-C SuperSpeed USB 20Gps (charge support 15W)

Not shown

(1) PCI Express Gen 5 x16

(2) PCI Express Gen3 x1 (1) PCI Express Gen4 x 16(wired as x4)

(4) M.2 (1 as M.2 2230 socket for WLAN/Bluetooth® and 3 as M.2 2280 socket for storage, slot2 toolless)

Overview

HP EliteDesk 8 Tower G1i / G1i E Desktop AI PC

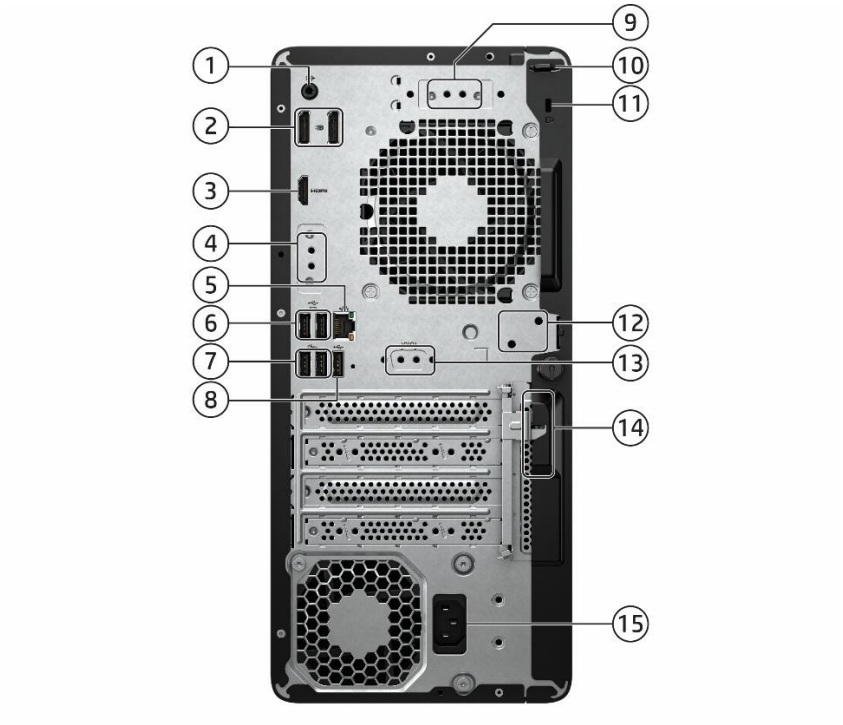

1. Audio line-out jack (supports line-in re-tasking)
2. (2) Dual-Mode DisplayPort™ 2.1 (DP++)
3. HDMI port 2.1
4. Flex port, choice of:
   - DisplayPort™ 2.1
   - HDMI 2.1
   - VGA
   - Fiber NIC 1Gbps
   - Thunderbolt™ 4
   - Dual Type-A SuperSpeed USB 5Gbps signaling rate port.
   - Serial
   - Dual Type-C SuperSpeed USB 10Gbps signaling rate port
   - USB-C® SuperSpeed USB 10Gbps signaling rate port (USB-C® option has alt mode DisplayPort™ 1.4 and 15W output)
5. RJ-45 (network) Jack
6. (2) Type A Hi-Speed USB 480 Mbps signaling rate port with wake from S4/S5
7. (2) Type A SuperSpeed USB 5Gbps signaling rate port
8. (1) Type-A Hi-Speed USB 480Mbps
9. Flex Port 2, choice of:
   - Dual Type-A SuperSpeed USB 5Gbps signaling rate port
   - Serial
10. Padlock loop
11. Standard cable lock slot
12. Solenoid lock
13. Serial port (optional)
14. Integrated keyboard/mouse wire hoop

    Power cord connector

Not shown

Optional ports

Optional Parallel port[1]

Optional 4 Serial Port PCIe Card[1]

Bays

(2) 3.5” internal storage drive bay[2]

(2) Slim optical drive bay (ODD and removable storage)[3]

1. Each of the legacy port options would occupy one rear slot.
2. The system does not come with HDD bay when the hard drive/ODD is not configured.
3. For future HDD/ODD installation, the HDD expansion module must be added to support a single 3.5” HDD.

Overview

HP EliteStudio 8 All-in-One G1i 23.8 / 27-inch Desktop AI PC
Touch/Non-Touch

1. Pull-up webcam (optional)
2. Speakers
3. Type-C® SuperSpeed USB 20Gbps signaling rate port (charge support up to 15W)
4. Combo Audio Jack with CTIA and OMTP headset support
5. Type-A SuperSpeed USB 10Gbps signaling rate port
6. Power Activity Light
7. Power Button

Overview

HP EliteStudio 8 All-in-One G1i 23.8 / 27-inch Desktop AI PC
Touch/Non-Touch

5MP Webcam with High SNR micorphones+ACS Sensor

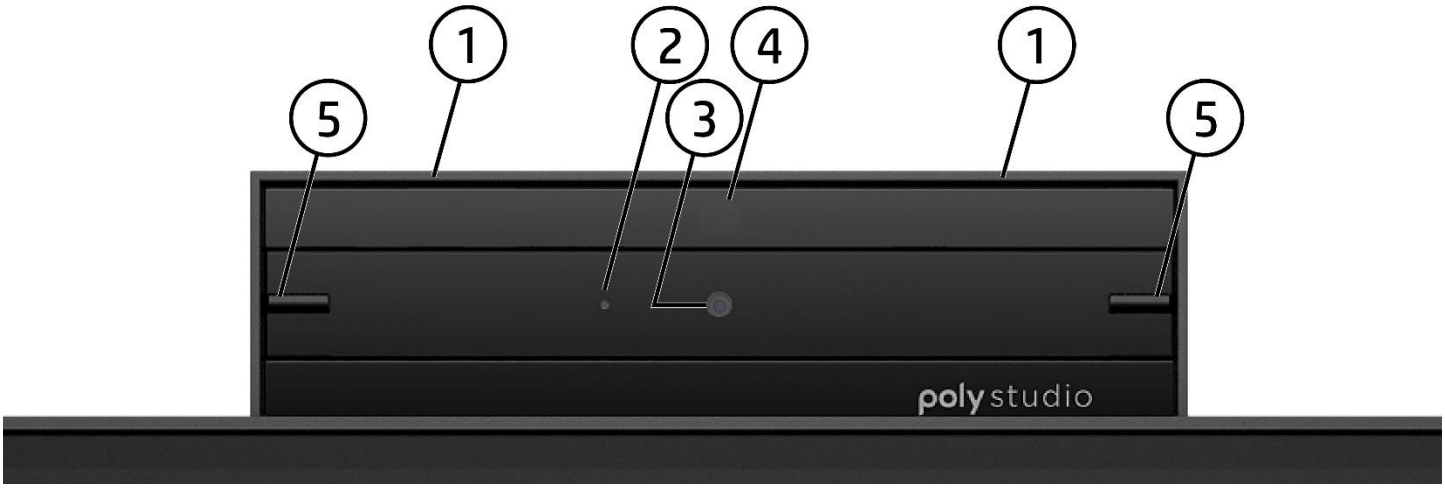

1. Dual Microphones
2. Webcam Light
3. 5MP Webcam
4. Ambient Color Sensor
5. Adjustable Tilt

5MP Webcam + IR Sensor + High SNR micorphones + ACS Sensor

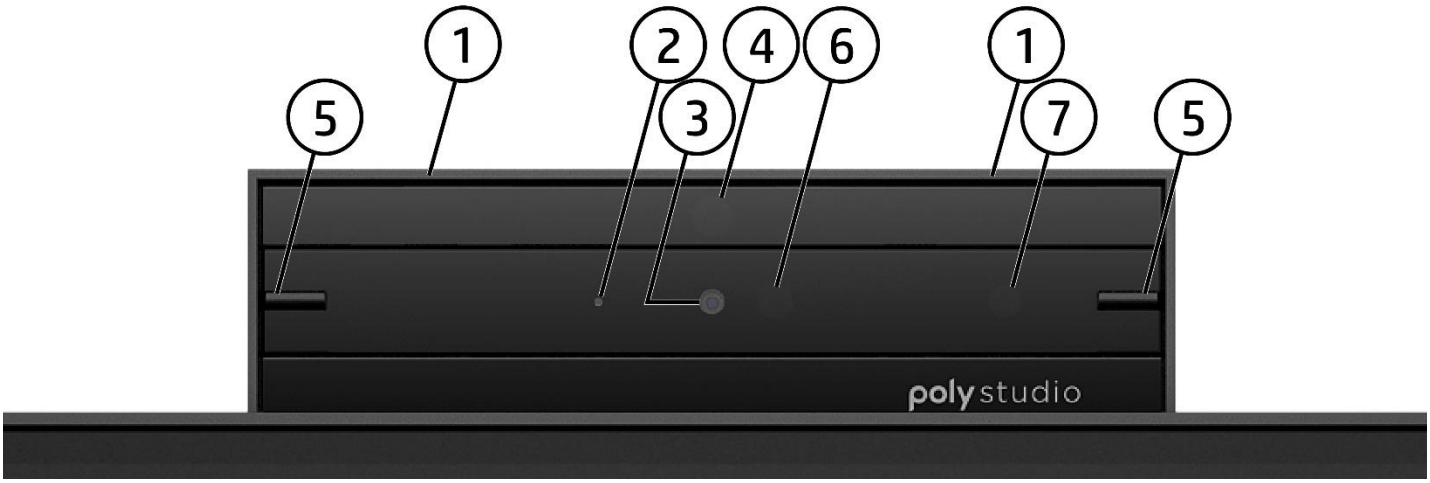

1. Dual Microphones
2. Webcam Light
3. 5MP Webcam
4. Ambient Color Sensor
5. Adjustable Tilt
6. IR Sensor
7. IR Light

Overview

HP EliteStudio 8 All-in-One G1i 23.8 / 27-inch Desktop AI PC
Touch/Non-Touch

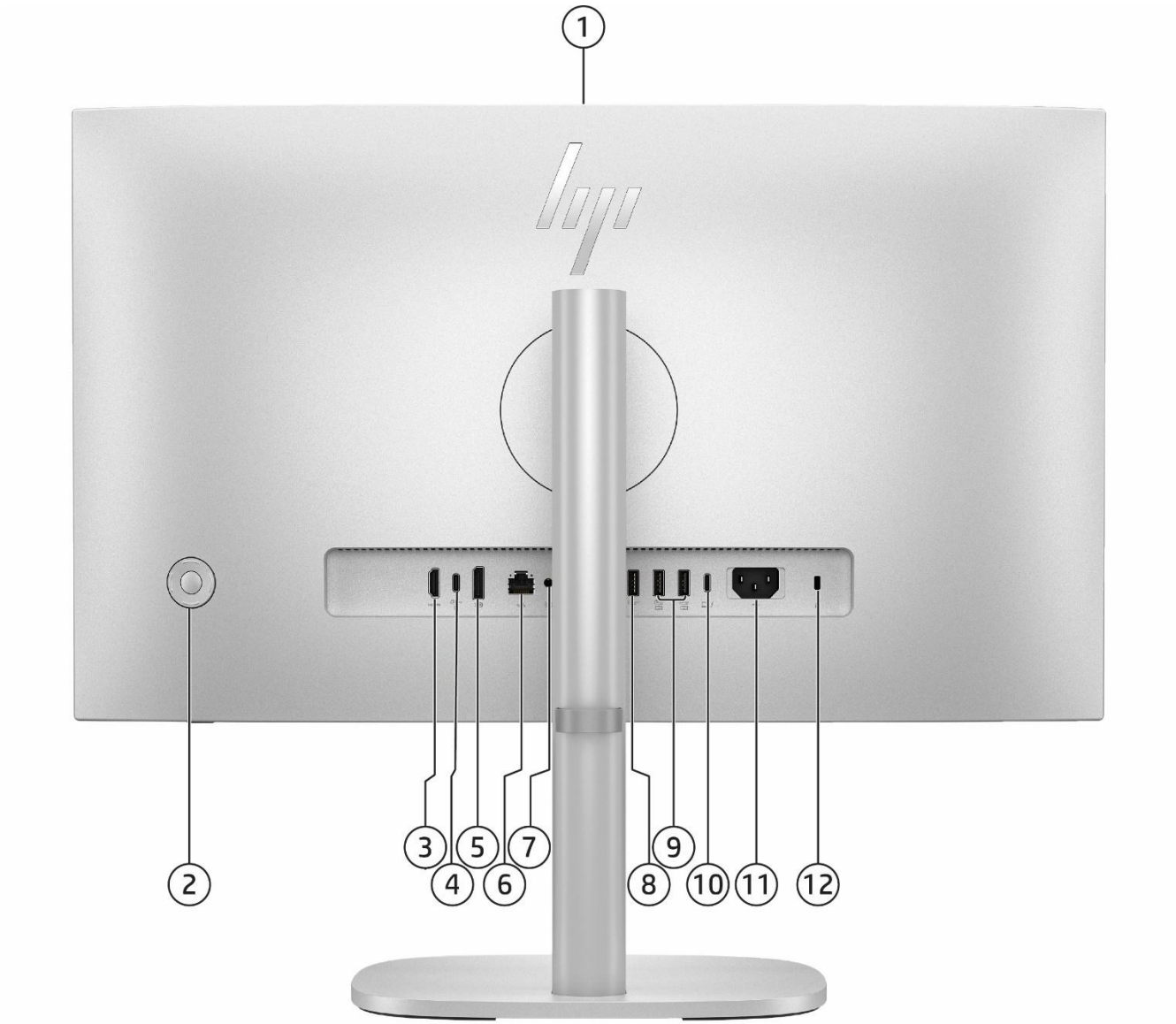

1. Pull-up Camera (Optional)
2. OSD
3. HDMI 2.1 Output
4. USB-C SuperSpeed 10Gbps with DisplayPort Alt Mode
5. DisplayPort 2.1
6. RJ-45 Network Adapter
7. Audio Line Out
8. Type-A SuperSpeed USB 10Gbps signaling rate port
9. (2) Type A SuperSpeed USB 5Gbps signaling rate port
10. Thunderbolt 4 40Gbps with 100W Power Delivery
11. Power cord connector
12. Standard Cable Lock Slot

Features

PRODUCT NAME

HP EliteDesk 8 Mini G1i Desktop AI PC
HP EliteDesk 8 SFF G1i Desktop AI PC
HP EliteDesk 8 Tower G1i Desktop AI PC
HP EliteDesk 8 Tower G1i E Desktop AI PC
HP EliteStudio 8 All-in-One G1i 23.8-inch Desktop AI PC
HP EliteStudio 8 All-in-One G1i 27-inch Desktop AI PC

OPERATING SYSTEM

Preinstalled
Windows 11 Pro[1]
Windows 11 Pro Education[1]
Windows 11 Home - HP recommends Windows 11 Pro for business[1]
Windows 11 Home Single Language - HP recommends Windows 11 Pro for business[1]
Windows 11 Pro (Windows 11 Enterprise or Windows 10 Enterprise available with a Volume Licensing Agreement)[1]
FreeDOS

1. Not all features are available in all editions or versions of Windows. Systems may require upgraded and/or separately purchased hardware, drivers, software or BIOS update to take full advantage of Windows functionality. Windows is automatically updated and enabled. High speed internet and Microsoft account required. ISP fees may apply and additional requirements may apply over time for updates. See http://www.windows.com.

CHIPSET

	Mini	SFF	TWR	AiO
Intel® Q870	X	X	X	X

Features

PROCESSORS

Intel® Core Ultra Processor	Mini	SFF	TWR	AiO
Intel® Core™ Ultra 9-285 Processor with Intel® UHD Graphics 4Xᵉ (2.5GHz, up to 5.6GHz with Intel® Turbo Boost[1] Max Technology and Intel® Thermal Velocity Boost, 36MB L3 Cache, 24 Cores, 24 Threads) 65W, Supports Intel® vPro® Technology[2]	X	X	X	X
Intel® Core™ Ultra 9-285T Processor with Intel® UHD Graphics 4Xᵉ (1.4GHz, up to 5.4GHz with Intel® Turbo Boost[1] Max Technology, 36MB L3 Cache, 24 Cores, 24 Threads) 35W, Supports Intel® vPro® Technology[2]	X			
Intel® Core™ Ultra 7-265 Processor with Intel® UHD Graphics 4Xᵉ (2.4GHz, up to 5.3GHz with Intel® Turbo Boost[1] Max Technology, 30MB L3 Cache, 20 Cores, 20 Threads) 65W, Supports Intel® vPro® Technology[2]	X	X	X	X
Intel® Core™ Ultra 7-265T Processor with Intel® UHD Graphics 4Xᵉ (1.4GHz, up to 5.4GHz with Intel® Turbo Boost[1] Max Technology, 36MB L3 Cache, 24 Cores, 20 Threads) 35W, Supports Intel® vPro® Technology[2]	X			
Intel® Core™ Ultra 5-245 Processor with Intel® UHD Graphics 4Xᵉ (3.5GHz, up to 5.1GHz, 24MB L3 Cache, 14 Cores, 14 Threads) 65W, Supports Intel® vPro® Technology[2]	X	X	X	X
Intel® Core™ Ultra 5-245T Processor with Intel® UHD Graphics 4Xᵉ (2.2GHz, up to 5.1GHz, 24MB L3 Cache, 14 Cores, 14 Threads) 35W, Supports Intel® vPro® Technology[2]	X			
Intel® Core™ Ultra 5-235 Processor with Intel® UHD Graphics 3Xᵉ (3.4GHz, up to 5GHz, 24MB L3 Cache, 14 Cores, 14 Threads) 65W, Supports Intel® vPro® Technology[2]	X	X	X	X
Intel® Core™ Ultra 5-235T Processor with Intel® UHD Graphics 3Xᵉ (2.2GHz, up to 5GHz, 24MB L3 Cache, 14 Cores, 14 Threads) 35W, Supports Intel® vPro® Technology[2]	X			
Intel® Core™ Ultra 5-225 Processor with Intel® UHD Graphics 2Xᵉ (3.3GHz, up to 4.9GHz, 20MB L3 Cache, 10 Cores, 10 Threads) 65W	X	X	X	X
Intel® Core™ Ultra 5-225T Processor with Intel® UHD Graphics 2Xᵉ (2.5GHz, up to 4.9GHz, 20MB L3 Cache, 10 Cores, 10 Threads) 35W	X			

1. Intel® Turbo Boost technology requires a PC with a processor with Intel Turbo Boost capability. Intel Turbo Boost performance varies depending on hardware, software and overall system. See http://www.intel.com/technology/turboboost for more information.
2. Intel vPro® requires Windows 10 Pro 64 bit or higher, a vPro supported processor, vPro enabled chipset, vPro enabled wired LAN and/or Wi-Fi 6E WLAN and TPM 2.0. Some functionality requires additional 3rd party software in order to run. Features of vPro® Essentials and Enterprise vary. See http://intel.com/vpro.

NOTE: All processors are embedded with 13 TOPs NPU.

Features

GRAPHICS

Integrated Intel® Graphics	Mini	SFF	TWR	AiO
Intel® UHD Graphics 4X^{e3}	X	X	X	X
Intel® UHD Graphics 3X^{e3}	X	X	X	X
Intel® UHD Graphics 2X^{e3}	X	X	X	X

Optional Discrete Graphics Solutions	Mini	SFF	TWR	AiO
NVIDIA® GeForce® RTX 5060 Ti 16GB GDDR7 Graphics Card[1]			X	
NVIDIA® GeForce® RTX 5060 8 GB GDDR7 Graphics Card[2]			X	
NVIDIA® GeForce® RTX 5050 8GB GDDR7 Graphics card[7,8]	X			X
NVIDIA® GeForce® RTX 3050 8GB GDDR6 Graphics card[2,6]			X	
NVIDIA® A400 4GB GDDR6 Graphics card[5,6]		X	X	
NVIDIA® A1000 8GB GDDR6 Graphics card[5,6]		X		
Intel® Arc™ A380 6GB GDDR6 Graphics card[6]			X	
AMD Radeon™ RX 6300 2GB GDDR6 Graphics card		X	X	

1. Not available with 280W and 400W power supply
2.Not available with 280W power supply.
3. Support up to 4 displays via native video ports on Desktop Mini with 35W processors. Support up to 6 out of 7 display output via native video ports, 1 optional video port flex IO and HP Video Port Extender flex module on Desktop Mini.
4. X^{e} is Intel LPG Graphics Architecture, one X*e-core* represents 16EU.
5. Not available with 180W power supply.
6. Support up to 8 displays via native video ports, a configurable Flex IO port and selected discrete graphics on TWR & SFF.
7. Support up to 7 displays vai natie video ports, a configurable Flex IO port and selected discrete graphics on Mini.
8. Support up to 5 displays via native video ports, a panel display and selected discrete graphics on Aio.

Adapters and Cables	Mini	SFF	TWR	AiO
HP DisplayPort™ Cable	X	X	X	X
HP DisplayPort™ to DVI-D Adapter		X	X	X
HP DisplayPort™ to VGA Adapter	X	X	X	X
HP USB to Serial Port Adapter	X	X	X	X
HP USB-C® to HDMI Adapter	X	X	X	X
HP USB-C® to DisplayPort™ Adapter G2	X	X	X	X
HP 1.8m HDMI Cable	X	X	X	X
1m Thunderbolt 4™ Cable (100W power delivery)	X			X

Features

STORAGE

NOTE: Starting November 1, 2023, HP PCs with Windows require Windows to be installed on SSD.
HDD can only be configured as additional data drives and not as the boot drive.
NOTE: SATA RAID and NVME RAID can be supported simultaneously when customers configure on their own.

3.5 inch SATA Hard Disk Drives (HDD)	Mini	SFF	TWR	AiO
1TB* 7200RPM SATA HDD		X	X	
2TB* 7200RPM SATA HDD		X	X	

M.2 PCIe NVMe Solid State Drives (SSD)[1]	Mini	SFF	TWR	AiO
256GB M.2 2280 PCIe NVMe SSD	X	X	X	X
512GB M.2 2280 PCIe NVMe SSD	X	X	X	X
1TB M.2 2280 PCIe NVMe SSD	X	X	X	X
512GB M.2 2280 PCIe NVMe Three Layer Cell SSD	X	X	X	X
1TB M.2 2280 PCIe NVMe Three Layer Cell SSD	X	X	X	X
2TB M.2 2280 PCIe NVMe Three Layer Cell SSD	X	X	X	X
512GB M.2 2280 PCIe NVMe Self Encrypted OPAL2 Three Layer Cell SSD[2]	X	X	X	X
256GB M.2 2280 PCIe OPAL2 NVMe SSD	X	X	X	X

1. For hard drives and solid state drives, GB = 1 billion bytes. TB = 1 trillion bytes. Actual formatted capacity is less. Up to 36 GB (for Windows) of system disk is reserved for the system recovery software.
2. Storage DriveLock does not work with Self Encrypting or Optane based storage.

Optical Disc Drives	Mini	SFF	TWR	AiO
HP 9.5mm Slim DVD-ROM Drive[1]		X	X	
HP 9.5mm Slim DVD Writer Drive[1]		X	X	

1. HD-DVD disks cannot be played on this drive. No support for DVD-RAM. Actual speeds may vary. Don't copy copyright-protected materials. Double Layer discs can store more data than single layer discs. Discs burned with this drive may not be compatible with many existing single-layer DVD drives and players.

Features

MEMORY

Memory Type	Mini	SFF*	TWR*	AiO
DDR5-5600 (Transfer rates up to 5600 MT/s), Max 64 GB, 2 SODIMM	X	X		X
DDR5-5600 (Transfer rates up to 5600 MT/s), Max 128 GB, 4 UDIMM		X	X	

***NOTE:** Memory modules support data transfer rates up to 5600 MT/s; system speed should follow Intel's design guideline. Actual data rate is determined by the system configuration.
***NOTE:** System architecture design is 2 DIMMS per channel and the population starts from the furthest memory slot from the processor.
***NOTE:** Symmetric configurations are required for the 2 DIMMs within the same memory channel.
***NOTE:** To achieve optimal memory speed, HP strongly recommends using identical memory modules (e.g., same capacity, same part number and from the same supplier within the same memory channel.
***NOTE:** All memory slots are customer accessible.

Memory Configuration	Mini	SFF	TWR	AiO
8GB (1 x 8GB)	X	X	X	X
16GB (2 x 8GB)	X	X	X	X
32GB (4 x 8GB)		X	X	
12GB (1x12GB)	X			X
16GB (1 x 16GB)	X	X	X	X
32GB (2 x 16GB)	X	X	X	X
64GB (4 x 16GB)		X	X	
24GB (1x24GB)	X			X
32GB (1 x 32GB)	X	X	X	X
64GB (2 x 32GB)	X	X	X	X
128GB (4 x 32GB)		X	X	

NETWORKING/COMMUNICATIONS

Ethernet (RJ-45)	Mini	SFF	TWR	AiO
Intel® I219-LM Integrated Gigabit Network Connection LOM (vPro)	X	X	X	X
Intel I226-T1 2.5GbE Ethernet Network Adapter		X	X	
Intel® I226V 2.5 Gigabit Network Connection LOM	X			

Wireless	Mini	SFF	TWR	AiO
Intel Wi-Fi 7 BE200 +Bluetooth® 5.4 Wireless Card non-vPro	X	X	X	X
Intel Wi-Fi 7 BE200 +Bluetooth® 5.4 Wireless Card vPro	X	X	X	X
Realtek RTL8852CE 802.11ax 2x2 Wi-Fi 6E + Bluetooth® 5.3 Wireless Card (802.11ax 2x2, supporting gigabit data rate)	X	X	X	X

NOTE: Wireless access point and Internet service required and sold separately. Availability of public wireless access points limited. Wi-Fi 7 (802.11BE) functionality requires compatible Windows 11 OS, compatible processor, and separately purchased Wi-Fi 7 router to support backwards compatibility with prior 802.11 specs. Available in countries where Wi-Fi 7 is supported.
NOTE: WiFi-6E might be restricted by local regulation and only available in countries where Wi-Fi 6E is supported. HP will enable countries in the future by upgrading BIOS in default as the technology becomes available in more regions.
NOTE: External Antenna is supported on Desktop Mini to strengthen the quality of networking and only available at the time of purchase.
NOTE: Supports Miracast when configured with Wi-Fi Wireless Card.

KEYBOARDS AND POINTING DEVICES

Keyboards	Mini	SFF	TWR	AiO
HP USB Business Slim v2 Wired SmartCard CCID Keyboard	X	X	X	X
HP 125 v2 AntiMicrobial Wired Keyboard (China Only)	X	X	X	X
HP 175 Wired Keyboard	X	X	X	X
HP 175 Antimicrobial Wired Keyboard[1] (China Only)	X	X	X	X
HP 320K v2 Wired Desktop Keyboard	X	X	X	X
HP 725 Multi-Device Rechargeable Wireless Keyboard	X	X	X	X
HP 125 v2 Wired Keyboard	X	X	X	X
HP 375 Secure Smartcard Keyboard	X	X	X	X

1. Available in China only.

Keyboard and Mouse Combo	Mini	SFF	TWR	AiO
HP 275 Wireless Keyboard and Mouse Combo	X	X	X	X
HP 725 Multi-Device Rechargeable Wireless Keyboard and Mouse Combo	X	X	X	X

NOTE: V2 keyboards contain copilot* shortcut key.
*Copilot in Windows requires Windows 11. Some features require an NPU. Timing of feature delivery and availability varies by market and device. Requires Microsoft account to log in. Where Microsoft in Windows is not available, the Copilot key will lead to the Bing search engine. Use of Recall requires customer authentication using Windows Hello Enhanced Sign in Security (ESS) which requires a fingerprint reader or facial recognition camera and may not be supported on all platforms. See http://aka.ms/WindowsAIFeatures.

Features

Mouse	Mini	SFF	TWR	AiO
HP Wired Desktop 320M Mouse	X	X	X	X
HP Wired 125 Mouse	X	X	X	X
HP Wired 125 Antimicrobial Mouse (China Only)	X	X	X	X
HP Wired 128 Laser Mouse	X	X	X	X
HP 175 Wired Mouse	X	X	X	X
HP 175 Antimicrobial Wired Mouse[1] (China Only)	X	X	X	X
HP 725 Multi-Device Rechargeable Wireless Mouse	X	X	X	X

1. Available in China only.

SECURITY

	Mini	SFF	TWR	AiO
TPM 2.0 endpoint security controller (Infineon SLB9672/Nuvoton NPCT760HABYX). Common Criteria EAL4+ Certified. FIPS 140-2 Level 2 Certified.	X	X	X	X
Solenoid Lock & Intrusion Sensor (optional)		X	X	
Intrusion Sensor for Mini/AiO (integrated in the PCA, can be enabled/disabled through BIOS)	X			X
Support for chassis cable lock devices	X (10 mm barrel or smaller)	X	X	X
Support for chassis padlocks devices	X	X	X	
SATA port disablement (via BIOS)	X	X	X	
Serial, USB enable / disable (via BIOS)	X	X	X	X
Serial, parallel, USB enable / disable (via BIOS)	X	X	X	X
Optional USB Port Disable at factory (user configurable via BIOS)	X	X	X	X
Removable media write/boot control	X	X	X	X
Power-on password (via BIOS)	X	X	X	X
Setup password (via BIOS)	X	X	X	X

PORTS

I/O Ports – Internal Ports	Mini	SFF	TWR	AiO
PCI Express 5.0 x16			1	
PCI Express 4.0 x16		1		
PCI Express 4.0 x4		1		
PCI Express 3.0 x16 (wired as x4)			1	
PCI Express 3.0 x1			2	
SATA 3.0 (6Gbps) port		2	3	
Internal shared 3rd SSD/dGPU connector	1			
M.2 PCIe	(1) M.2 PCIe 3 x1 2230 (for WLAN) (2) M.2 PCIe 4 x 4 2280 (for storage) (1) M.2 PCIe 4x4 2280 (only available with 3rd SSD expansion kit)	(1) M.2 PCIe 3 x1 2230 (for WLAN) (3) M.2 PCIe 4 x4 2280 (for storage)	(1) M.2 PCIe 3 x1 2230 (for WLAN) (3) M.2 PCIe 4 x4 2280 (for storage)	(1) M.2 WLAN+ Bluetooth Combo; (2) M.2 2280 for NVME SSD storage. attached to CPU PCIe Gen 4.0,

NOTE: M.2 SSD attached to CPU is PCIe Gen 4, the other two M.2 are PCIe Gen 3 (AIO).
NOTE: For Mini configured with 3rd M.2 Storage, can't be configured with discrete graphics.
NOTE: For Mini 3rd SSD is only available on selected base units at the time of purchase.
NOTE: PCI slots for TWR are full height and SFF are low profile.

Standard User Accessible Ports	Mini	SFF	TWR	AiO
Type-A Hi-Speed USB 480Mbps signaling rate port		3 (rear)	3(rear)	
Type-A SuperSpeed USB 5 Gbps signaling rate port		2 (rear)	2 (rear)	2 (rear)
Type-A SuperSpeed USB 10 Gbps signaling rate port	2(front) 2 (rear)	4 (front)	4 (front)	1 (rear) 1 (down facing)
Type-C® SuperSpeed USB 10Gbps signaling rate port (USB-C® option has alt mode DisplayPort™ 1.4)				1 (rear)
Type-C® SuperSpeed USB 20Gbps signaling rate port (charge supports up to 15W)	1 (front)	2 (front)	2 (front)	1 (down facing)
Thunderbolt™ 4.0 with Alt Mode DisplayPort™ and 100W Power intake	1 (rear)			1 (rear)

Features

Video[1]	2 DisplayPort™ 2.1 HBR3 1 HDMI 2.1 1 Thunderbot™ 4.0 with Alt Mode DisplayPort™	2 DisplayPort™ 2.1 HBR3 1 HDMI 2.1	2 DisplayPort™ 2.1 HBR3 1 HDMI 2.1	1 DisplayPort™ 2.1 (rear) 1 USB Type-C® with alt mode display (rear) 1 Thunderbot™ 4.0 with Alt Mode DisplayPort™ (Rear) 1 HDMI 2.1
Audio	1 Combo Audio Jack with CTIA and OMTP headset support (front)	1 Universal Audio Jack with CTIA and OMPT headset support (front); 1 Audio-Line-in/Line out (rear)	1 Universal Audio Jack with CTIA and OMPT headset support (front); 1 Audio-Line-in/Line out (rear)	1 CTIA/OMTP UAJ (down facing) 1 Audio Line Out(rear)

1. For actual resolution supported, refer to the Graphics section of this document.

(1) Flexible Port 1, choice of one of the following[1]:	**Mini**	**SFF**	**TWR**	**AiO**
Dual SuperSpeed USB Type-A 5 Gbps signaling rate port	1	1	1	
Dual SuperSpeed USB Type-C 10Gbps signaling rate port with 15W power out	1	1	1	
Type-C® SuperSpeed USB 10Gbps signaling rate port		1	1	
Thunderbolt™ 4.0	1	1	1	
Video	1 DisplayPort™ 2.1 or HDMI 2.1 or VGA	1 DisplayPort™ 2.1 or HDMI 2.1 or VGA	1 DisplayPort™ 2.1 or HDMI 2.1 or VGA	
Serial	1	1	1	
Fiber NIC	1x1 Gbps NIC	1x1 Gbps NIC	1x1 Gbps NIC	
RJ-45 Ethernet	1 x2.5GbE NIC	1[2]	1[2]	

1. Sold separately or as an optional feature.
2. Occupies a PCIe slot on TWR/SFF.
NOTE: Integrated graphics support up to max 4 display signals out of 5 video output ports.
Support up to 6 out of 7 display outputs at a time when configured with 1 optional video port flex IO and 1 HP Video Port Extender.

(1) Flexible Port 2, choice of one of the following[1]:	**Mini**	**SFF**	**TWR**	**AiO**
Dual Type-A SuperSpeed USB 5Gbps signaling rate port	1	1	1	
Serial	1	1	1	
Discrete Graphic	1			
HP Video Port Extender	1			

1.Must be configured at time of purchase

Features

Bays	Mini	SFF	TWR	AiO
Slim Optical Disc Drive (ODD or removable storage, optional)		1	2	
3.5" Internal Storage Drive		1[1]	2[1]	

1.Must be configured at time of purchase

USB SPECIFICATION AND MARKETING NAME MAPPING TABLE

Marketing Name	Technical Terminology
Hi-Speed USB 480Mbps signaling rate	USB 2.0
SuperSpeed USB 5Gbps signaling rate	USB 3.2 Gen 1
SuperSpeed USB 10Gbps signaling rate	USB 3.2 Gen 2
SuperSpeed USB 20Gbps signaling rate	USB 3.2 Gen 2x2

SOFTWARE COMPONENTS AND APPLICATIONS WITH 7

Software
Buy Microsoft Office[1]
Edge Customization
HP Connection Optimizer
HP Desktop Support Utilities
HP Documentation
HP Hotkey Support
HP Notifications HP PC Hardware Diagnostics UEFI
HP PC Hardware Diagnostics Windows
HP Privacy Settings
HP Services Scan[2]
HP Setup Integrated OOBE
HP Smart Support[3]
HP Support Assistant[4]
HSA Fusion for Commercial
HSA Telemetry for Commercial
myHP (SFF & TWR) myHP with Multicamera[5] support (AIO & Mini)
Poly Camera Pro (AIO Only)
Poly Lens

Manageability Features
HP Client Catalog (download))[6]
HP Client Management Script Library (download)
HP Cloud Recovery[7]
HP Connect for Microsoft Endpoint Manager[8]
HP Driver Packs (download)[9]
HP Image Assistant (download)[10]
HP Manageability Integration Kit (download)[11]
HP Patch Assistant (download)[12]

Security Features
HP Protect and Trace
HP Endpoint Security Controller (ESC) Gen5
HP Wolf Security for Business[13] includes:
HP Sure Admin[14]
HP Sure Click[15]
HP Sure Run[16]
HP Sure Sense[17]
HP Sure Recover[18]
HP Sure Start[19]
HP Tamper Lock[20]
HP Secured-Core PC Enable

BIOS
Absolute Persistence Module[21]
HP Bios Recovery
HP BIOS Update via Network
HP BIOSphere[22]
HP Secure Erase[23]
HP DriveLock & Automatic DriveLock
TPM
UEFI Self Certification Level: 2.9

Features

1. Microsoft 365 sold separately and requires Internet access for activation.
2. HP Services Scan automatically collects the telemetry necessary upon initial boot of the product to deliver device-level configuration data and health insights and is available preinstalled on select products, thru HP Factory Configuration Services; or it can be downloaded. For more information about how to enable HP Smart Support or for download, please visit http://www.hp.com/smart-support.
3. HP Smart Support automatically collects the telemetry necessary upon initial boot of the product to deliver device-level configuration data and health insights and is available preinstalled on select products, thru HP Factory Configuration Services; or it can be downloaded. For more information about how to enable HP Smart Support or for download, please visit http://www.hp.com/smart-support.
4. HP Support Assistant is available on Windows. For more information, please visit http://www.support.hp.com/help/hp-support-assistant
5. MyHP with Multicamera support for Mini Desktop PC will only available on 13th processor and beyond.
6. HP Client Catalog not preinstalled, however available for download at (https://www.hp.com/us-en/solutions/client-management-solutions.html).
7. HP Cloud Recovery is available for Z by HP, HP Elite and Pro desktops and laptops PCs with Intel® or AMD processors and requires an open, network connection. Note: You must back up important files, data, photos, videos, etc. before use to avoid loss of data. Detail, please refer to: https://support.hp.com/us-en/document/c05115630.
8. HP Connect for Microsoft Endpoint Manager is available from the Azure Market Place for HP Pro, Elite, Z and Point-of-Sale PCs managed with Microsoft Endpoint Manager. Subscription to Microsoft Endpoint Manager required and sold separately. Network connection required.
9. HP Driver Packs not preinstalled, however available for download at http://www.hp.com/go/clientmanagement.
10. HP Image Assistant not preinstalled, however available for download at (https://ftp.ext.hp.com/pub/caps-softpaq/cmit/HPIA.html)
11. HP Manageability Integration Kit can be downloaded from http://www.hp.com/go/clientmanagement.
12. HP Patch Assistant available on select HP PCs with the HP Manageability Kit that are managed through Microsoft System Center Configuration Manager. HP Manageability Integration Kit can be downloaded from http://www8.hp.com/us/en/ads/clientmanagement/overview.html.
13. HP Wolf Security for Business requires Windows 10 or 11 or higher, includes various HP security features and is available on HP Pro, Elite, RPOS and Workstation products. See product details for included security features.
14. HP Sure Admin requires HP G8 or newer platforms, Windows 10 or higher, HP BIOS, HP Manageability Kit or KMS Service from http://www.hp.com/go/clientmanagement and HP Sure Admin Local Access Authenticator
15. HP Sure Click requires Windows 10 Pro or higher or Enterprise. See https://bit.ly/2PrLT6A_SureClick for complete details.
16. HP Sure Run is available on select HP PCs and requires Windows 10 and higher.
17. HP Sure Sense is available on select HP PCs with Windows 10 Pro, Windows 10 Enterprise, Windows 11 Pro, or Windows 11 Enterprise OS.
18. HP Sure Recover is available on select HP PCs and requires Windows 10 or 11 and an open network connection. You must back up important files, data, photos, videos, etc. before using HP Sure Recover to avoid loss of data. HP Sure Recover Gen6 with Embedded Reimaging is an optional feature on select HP PCs which requires Windows 10 or 11 must be configured at purchase. You must back up important files, data, photos, videos, etc. before use to avoid loss of data.
19. HP Sure Start is available on select HP PCs and requires Windows 10 and higher
20. HP Tamper Lock can be Enabled/disabled by customers or IT administrator with administrator authority.
21. Absolute Persistence firmware module is shipped turned off and can only be activated with the purchase a license subscription and full activation of the software agent. License subscriptions can be purchased for terms ranging multiple years. Service is limited, check with Absolute for availability outside the U.S. Certain conditions apply. For full details visit: https://www.absolute.com/about/legal/agreements/absolute/.
22. HP BIOSphere features may vary depending on the platform and configuration.
23. HP Secure Erase implements the methods outlined in the National Institute of Standards and Technology Special .

UNIT ENVIRONMENT AND OPERATING CONDITIONS

ENERGY STAR® certified models available

ENERGY STAR® certified. EPEAT® registered where applicable. Based on US EPEAT® registration according to IEEE 1680.1-2018 EPEAT®. EPEAT® status varies by country. Visit http://www.epeat.net for more information.
Low halogen (chassis, all internal components and modules)[1]
TAA compliant models available

1. External power supplies, power cords, cables and peripherals are not Low Halogen. Service parts obtained after purchase may not be Low Halogen.

UNIT ENVIRONMENT AND OPERATING CONDITIONS

General Unit Operating Guidelines

- Keep the computer away from excessive moisture, direct moisture and the extremes of heat and cold, to ensure that unit is operated within the specified operating range.
- Leave a 10.2 cm (4 in) clearance on all vented sides of the computer to permit the required airflow.
- Never restrict airflow into the computer by blocking any vents or air intakes.
- Do not stack computers on top of each other or place computers so near each other that they are subject to each other's re-circulated or preheated air.
- Occasionally clean the air vents on the front, back, and any other vented side of the computer. Lint, dust and other foreign matter can block the vents and limit the airflow.
- If the computer is to be operated within a separate enclosure, intake and exhaust ventilation must be provided on the enclosure, and the same operating guidelines listed above will still apply.

Temperature Range	Operating: 50° to 95° F (10° to 35° C)[2] Non-operating: -22° to 149° F (-30° to 65° C)
Relative Humidity	Operating: 10% to 90% (non-condensing at ambient) Non-operating: 5% to 95% (non-condensing at ambient)
Maximum Altitude (unpressurized)	Operating: 5000m Non-operating: 50000ft (15240 m)

2. Operating temperature is de-rated 1.0 deg C per 300 m (1000 ft) to 3000 m (10,000 ft) above sea level, no direct sustained sunlight. Maximum rate of change is 10 deg C/Hr. The upper limit may be limited by the type and number of options installed.

Features

ENVIRONMENTAL & INDUSTRY

HP EliteDesk 8 Mini G1i Desktop AI PC

Eco-Label Certifications & declarations	This product has received or is in the process of being certified to the following approvals and may be labeled with one or more of these marks: • IT ECO declaration • US ENERGY STAR® • US Federal Energy Management Program (FEMP) • EPEAT® Climate+ registered in the United States. See http://www.epeat.net for registration status in your country.* • TCO Certified • China Energy Conservation Program (CECP) • China State Environmental Protection Administration (SEPA) • Taiwan Green Mark • Korea Eco-label • Japan PC Green label • Commission Regulation (EC) No 617/2013 (ErP Lot 3) **NOTE***: Based on US EPEAT® registration according to IEEE 1680.1-2018 EPEAT®. EPEAT® status varies by country. Visit http://www.epeat.net for more information.		
Sustainable Impact Specifications	• At least 25% ocean bound plastic-PET Bottle in the Fan and 5% ocean bound plastic-PET Bottle used in the Speaker[1] • At least 5% OP-EPS in plastic parts of Enclosure • At least 55% of total post-consumer recycled plastic used in the system[2] • 95% recycled plastic used in parts • 20% recycled metal used in parts • 100% recycled Aluminum used in thermal part • 100% Recycled Rare Earth Elements (REE) used in speaker • Outside Box and corrugated cushions are 100% sustainably sourced and recyclable[3] • Molded Paper Pulp Cushion inside box is 100% sustainably sourced and recyclable[4] • Bulk packaging available[5]		
System Configuration	The configuration used for the Energy Consumption and Declared Noise Emissions data for the Desktop model is based on a "Typically Configured Desktop.		
Energy Consumption (in accordance with US ENERGY STAR® test method)	**115VAC, 60Hz**	**230VAC, 50Hz**	**100VAC, 50Hz**
Normal (Short idle)	6.42 W	6.53 W	6.22 W
Normal Operation (Long idle)	N/A	N/A	N/A
Sleep	2.18 W	2.21 W	2.14 W
Off	0.77 W	0.79 W	0.74 W
	NOTE: Energy efficiency data listed is for an ENERGY STAR® certified product if offered within the model family. HP computers marked with the ENERGY STAR® Logo are compliant with the applicable U.S. Environmental Protection Agency (EPA) ENERGY STAR® specifications for computers. If a model family does not offer ENERGY STAR® certified configurations, then energy efficiency data listed is for a typically configured PC featuring a hard disk drive, a high efficiency power supply, and a Microsoft Windows® operating system.		

Features

Heat Dissipation*	**115VAC, 60Hz**	**230VAC, 50Hz**	**100VAC, 50Hz**
Normal Operation (Short idle)	21.9 BTU/hr	22.3 BTU/hr	21.2 BTU/hr
Normal Operation (Long idle)	N/A	N/A	N/A
Sleep	7.4 BTU/hr	7.5 BTU/hr	7.3 BTU/hr
Off	2.6 BTU/hr	2.7 BTU/hr	2.5 BTU/hr
	NOTE: Heat dissipation is calculated based on the measured watts, assuming the service level is attained for one hour.		

Declared Noise Emissions (in accordance with ISO 7779 and ISO 9296)	Sound Power (L_{WAd}, bels)	Sound Pressure (L_{pAm}, decibels)
Typically Configured – Idle	2.7	16
Fixed Disk – Random writes	2.7	16

Longevity and Upgrading	This product can be upgraded, possibly extending its useful life by several years. Upgradeable features and/or components contained in the product may include: Spare parts are available throughout the warranty period and or for up to "5" years after the end of production.
Additional Information	• This product is in compliance with the Restrictions of Hazardous Substances (RoHS) directive - 2011/65/EC. • This HP product is designed to comply with the Waste Electrical and Electronic Equipment (WEEE) Directive – 2002/96/EC. • This product is in compliance with California Proposition 65 (State of California; Safe Drinking Water and Toxic Enforcement Act of 1986). • This product is in compliance with the IEEE 1680 (EPEAT) standard at the Climate+ level, see http://www.epeat.net • Plastics parts weighing over 25 grams used in the product are marked per ISO11469 and ISO1043. • This product is 92.7% recycleable when properly disposed of at end of life.

Packaging Materials -Horizontal design	**External:**	PAPER/Paper	652 g
	Internal:	PAPER/Molded pulp	79 g
		PLASTIC/Polyethylene low density - LDPE	16 g
Packaging Materials -Vertical design	**External:**	PAPER/Corrugated	405 g
	Internal:	PAPER/Molded pulp	74 g
		PLASTIC/Polyethylene low density - LDPE	5 g
	The plastic packaging material contains at least 80.0% recycled content.		
	The corrugated paper packaging materials contain at least 80.0% recycled content.		

RoHS Compliance	HP Inc. complies fully with materials regulations. We were among the first companies to extend the restrictions in the European Union (EU) Restriction of Hazardous Substances (RoHS) Directive to our products worldwide through the HP GSE. HP has contributed to the development of related legislation in Europe, as well as China, India, and Vietnam. We believe the RoHS directive and similar laws play an important role in promoting industry-wide elimination of substances of concern. We have supported the inclusion of additional substances—including PVC, BFRs, and certain phthalates—in future RoHS legislation that pertains to electrical and electronics products. We met our voluntary objective to achieve worldwide compliance with the new EU RoHS requirements for virtually all relevant products by July 2013, and we will continue to extend the scope of the commitment to include further restricted substances as regulations continue to evolve. To obtain a copy of the HP RoHS Compliance Statement, see: HP RoHS position statement.

Material Usage	This product does not contain any of the following substances in excess of regulatory limits (refer to the HP General Specification for the Environment at http://www.hp.com/hpinfo/globalcitizenship/environment/pdf/gse.pdf): • Asbestos • Certain Azo Colorants • Certain Brominated Flame Retardants – may not be used as flame retardants in plastics • Cadmium • Chlorinated Hydrocarbons • Chlorinated Paraffins • Formaldehyde • Halogenated Diphenyl Methanes • Lead carbonates and sulfates • Lead and Lead compounds • Mercuric Oxide Batteries • Nickel – finishes must not be used on the external surface designed to be frequently handled or carried by the user. • Ozone Depleting Substances • Polybrominated Biphenyls (PBBs) • Polybrominated Biphenyl Ethers (PBBEs) • Polybrominated Biphenyl Oxides (PBBOs) • Polychlorinated Biphenyl (PCB) • Polychlorinated Terphenyls (PCT) • Polyvinyl Chloride (PVC) – except for wires and cables, and certain retail packaging has been voluntarily removed from most applications. • Radioactive Substances • Tributyl Tin (TBT), Triphenyl Tin (TPT), Tributyl Tin Oxide (TBTO)
Packaging Usage	HP follows these guidelines to decrease the environmental impact of product packaging: • Design packaging materials for ease of disassembly. • Maximize the use of post-consumer recycled content materials in packaging materials. • Use readily recyclable packaging materials such as paper and corrugated materials. • Reduce size and weight of packages to improve transportation fuel efficiency. • Plastic packaging materials are marked according to ISO 11469 and DIN 6120 standards.
End-of-life Management and Recycling	HP Inc. offers end-of-life HP product return and recycling programs in many geographic areas. To recycle your product, please go to: http://www.hp.com/go/reuse-recycle or contact your nearest HP sales office. Products returned to HP will be recycled, recovered or disposed of in a responsible manner. The EU WEEE directive (2002/95/EC) requires manufacturers to provide treatment information for each product type for use by treatment facilities. This information (product disassembly instructions) is posted on the Hewlett Packard web site at: http://www.hp.com/go/recyclers. These instructions may be used by recyclers and other WEEE treatment facilities as well as HP OEM customers who integrate and re-sell HP equipment. Global Citizenship Report http://www.hp.com/hpinfo/globalcitizenship/gcreport/index.html Eco-label certifications http://www8.hp.com/us/en/hp-information/environment/ecolabels.html ISO 14001 certificates: http://h20195.www2.hp.com/V2/GetDocument.aspx?docname=c04755842 and http://www.hp.com/hpinfo/globalcitizenship/environment/pdf/cert.pdf

footnotes	1. Percentage of ocean-bound plastic & PCR contained in each component varies by product. 2. Recycled plastic content percentage is based on the definition set in the IEEE 1680.1-2018 standard. 3. 100% outer box packaging and corrugated cushions made from sustainably sourced certified and recycled fibers. 4. Fiber cushions made from 100% recycled wood fiber and organic materials. 5. Plastic cushions are made from >90% recycled plastic.

HP EliteDesk 8 SFF G1i Desktop AI PC

Eco-Label Certifications & declarations	This product has received or is in the process of being certified to the following approvals and may be labeled with one or more of these marks: • IT ECO declaration • US ENERGY STAR® • US Federal Energy Management Program (FEMP) • EPEAT® Climate+ registered in the United States. See http://www.epeat.net for registration status in your country*. • TCO Certified • China Energy Conservation Program (CECP) • China State Environmental Protection Administration (SEPA) • Taiwan Green Mark • Korea Eco-label • Japan PC Green label • Commission Regulation (EC) No 617/2013 (ErP Lot 3) **NOTE***: Based on US EPEAT® registration according to IEEE 1680.1-2018 EPEAT®. EPEAT® status varies by country. Visit http://www.epeat.net for more information.
Sustainable Impact Specifications	• At least 25% ocean bound plastic-PET Bottle in the fan and 5% ocean bound plastic-PET used in the speaker • 95% recycled plastic used in parts • 20% recycled metal used in parts • At least 60% of the total post-consumer recycled plastic used in the system • 100% Recycled Rare Earth Elements (REE) in speaker • Outside Box and corrugated cushions are 100% sustainably sourced and recyclable • Molded Paper Pulp Cushion inside box is 100% sustainably sourced and recyclable • Bulk packaging available
System Configuration	The configuration used for the Energy Consumption and Declared Noise Emissions data for the Desktop model is based on a “Typically Configured Desktop.

Energy Consumption (in accordance with US ENERGY STAR® test method)	**115VAC, 60Hz**	**230VAC, 50Hz**	**100VAC, 50Hz**
Normal Operation (Short idle)	5.34 W	5.37 W	5.33 W
Normal Operation (Long idle)	N/A	N/A	N/A
Sleep	2.24 W	2.26 W	2.27 W
Off	0.65 W	0.65 W	0.65 W

Features

	NOTE: Energy efficiency data listed is for an ENERGY STAR® compliant product if offered within the model family. HP computers marked with the ENERGY STAR® Logo are compliant with the applicable U.S. Environmental Protection Agency (EPA) ENERGY STAR® specifications for computers. If a model family does not offer ENERGY STAR® compliant configurations, then energy efficiency data listed is for a typically configured PC featuring a hard disk drive, a high efficiency power supply, and a Microsoft Windows® operating system.

Heat Dissipation*	**115VAC, 60Hz**	**230VAC, 50Hz**	**100VAC, 50Hz**
Normal Operation (Short idle)	18.2 BTU/hr	18.3 BTU/hr	18.2 BTU/hr
Normal Operation (Long idle)	N/A	N/A	N/A
Sleep	7.6 BTU/hr	7.7 BTU/hr	7.7 BTU/hr
Off	2.2 BTU/hr	2.2 BTU/hr	2.2 BTU/hr

	NOTE: Heat dissipation is calculated based on the measured watts, assuming the service level is attained for one hour.

Declared Noise Emissions (in accordance with ISO 7779 and ISO 9296)	Sound Power (L_{WAd}, bels)	Sound Pressure (L_{pAm}, decibels)
Typically Configured – Idle	3.1	19
Fixed Disk–Random writes	3.3	21
Optical Drive – Sequential reads	3.0	19

Longevity and Upgrading	This product can be upgraded, possibly extending its useful life by several years. Upgradeable features and/or components contained in the product may include: Spare parts are available throughout the warranty period and or for up to “5” years after the end of production.
Additional Information	• This product is in compliance with the Restrictions of Hazardous Substances (RoHS) directive - 2011/65/EC. • This HP product is designed to comply with the Waste Electrical and Electronic Equipment (WEEE) Directive – 2002/96/EC. • This product is in compliance with California Proposition 65 (State of California; Safe Drinking Water and Toxic Enforcement Act of 1986). • This product is in compliance with the IEEE 1680 (EPEAT) standard at the Climate+ level, see http://www.epeat.net • Plastics parts weighing over 25 grams used in the product are marked per ISO11469 and ISO1043. • This product is 93.6% recycle-able when properly disposed of at end of life.

Packaging Materials (vary by country)			
	External:	PAPER/Corrugated	424 g
	Internal:	PAPER/Molded Pulp	468 g
		PLASTIC/Polyethylene low density – LDPE	28 g
	The plastic packaging material contains at least 320-0% recycled content.		
	The corrugated paper packaging materials contain at least 35% recycled content.		

RoHS Compliance	HP Inc. complies fully with materials regulations. We were among the first companies to extend the restrictions in the European Union (EU) Restriction of Hazardous Substances (RoHS) Directive to our products worldwide through the HP GSE. HP has contributed to the development of related legislation in Europe, as well as China, India, and Vietnam. We believe the RoHS directive and similar laws play an important role in promoting industry-wide elimination of substances of concern. We have supported the inclusion of additional substances—including PVC, BFRs, and certain phthalates—in future RoHS legislation that pertains to electrical and electronics products. We met our voluntary objective to achieve worldwide compliance with the new EU RoHS requirements for virtually all relevant products by July 2013, and we will continue to extend the scope of the commitment to include further restricted substances as regulations continue to evolve. To obtain a copy of the HP RoHS Compliance Statement, see: HP RoHS position statement.
Material Usage	• This product does not contain any of the following substances in excess of regulatory limits (refer to the HP General Specification for the Environment at http://www.hp.com/hpinfo/globalcitizenship/environment/supplychain/gen_specifications.html): • Asbestos • Certain Azo Colorants • Certain Brominated Flame Retardants – may not be used as flame retardants in plastics • Cadmium • Chlorinated Hydrocarbons • Chlorinated Paraffins • Bis(2-Ethylhexyl) phthalate (DEHP) • Benzyl butyl phthalate (BBP) • Dibutyl phthalate (DBP) • Diisobutyl phthalate (DIBP) • Formaldehyde • Halogenated Diphenyl Methanes • Lead carbonates and sulfates • Lead and Lead compounds • Mercuric Oxide Batteries • Nickel – finishes must not be used on the external surface designed to be frequently handled or carried by the user. • Ozone Depleting Substances • Polybrominated Biphenyls (PBBs) • Polybrominated Biphenyl Ethers (PBBEs) • Polybrominated Biphenyl Oxides (PBBOs) • Polychlorinated Biphenyl (PCB) • Polychlorinated Terphenyls (PCT) • Polyvinyl Chloride (PVC) – except for wires and cables, and certain retail packaging has been voluntarily removed from most applications. • Radioactive Substances • Tributyl Tin (TBT), Triphenyl Tin (TPT), Tributyl Tin Oxide (TBTO)

Packaging Usage	HP follows these guidelines to decrease the environmental impact of product packaging: • Design packaging materials for ease of disassembly. • Maximize the use of post-consumer recycled content materials in packaging materials. • Use ready recyclable packaging materials such as paper and corrugated materials. • Reduce size and weight of packages to improve transportation fuel efficiency. • Plastic packaging materials are marked according to ISO 11469 and DIN 6120 standards.
End-of-life Management and Recycling	HP Inc. offers end-of-life HP product return and recycling programs in many geographic areas. To recycle your product, please go to: http://www.hp.com/go/reuse-recycle or contact your nearest HP sales office. Products returned to HP will be recycled, recovered or disposed of in a responsible manner. The EU WEEE directive (2002/95/EC) requires manufacturers to provide treatment information for each product type for use by treatment facilities. This information (product disassembly instructions) is posted on the Hewlett Packard web site at: http://www.hp.com/go/recyclers. These instructions may be used by recyclers and other WEEE treatment facilities as well as HP OEM customers who integrate and re-sell HP equipment. Global Citizenship Report http://www.hp.com/hpinfo/globalcitizenship/gcreport/index.html Eco-label certifications http://www8.hp.com/us/en/hp-information/environment/ecolabels.html ISO 14001 certificates: http://h20195.www2.hp.com/V2/GetDocument.aspx?docname=c04755842 and http://www.hp.com/hpinfo/globalcitizenship/environment/pdf/cert.pdf
footnotes	• Percentage of ocean-bound plastic and PCR contained in each component varies by product • Recycled plastic content percentage is based on the definition set in the IEEE 1680.1-2018 standard. • 100% outer box packaging and corrugated cushions made from sustainably sourced certified and recycled fibers. • Fiber cushions made from 100% recycled wood fiber and organic materials. • Plastic cushions are made from >90% recycled plastic. • recycled metal is expressed as a percentage of the total weight of the metal according to ISO 14021 definitions for metal parts over 25 grams.

HP EliteDesk 8 Tower G1i/G1i E Desktop AI PC

Eco-Label Certifications & declarations	This product has received or is in the process of being certified to the following approvals and may be labeled with one or more of these marks: • IT ECO declaration • US ENERGY STAR® • US Federal Energy Management Program (FEMP) • EPEAT® Climate+ registered in the United States. See http://www.epeat.net for registration status in your country.* • TCO Certified • China Energy Conservation Program (CECP) • China State Environmental Protection Administration (SEPA) • Taiwan Green Mark • Korea Eco-label • Japan PC Green label • Commission Regulation (EC) No 617/2013 (ErP Lot 3) **NOTE***: Based on US EPEAT® registration according to IEEE 1680.1-2018 EPEAT®. EPEAT® status varies by country. Visit http://www.epeat.net for more information.

Features

Sustainable Impact Specifications	• At least 25% ocean bound plastic-PET Bottle in the fan and 5% ocean bound plastic-PET in the speaker • 95% recycled plastic used in parts • 20% recycled metal used in parts • At least 60% of post-consumer recycled plastic used in system • 100% Recycled Rare Earth Elements (REE) used in speaker • Outside Box and corrugated cushions are 100% sustainably sourced and recyclable • Molded Paper Pulp Cushion inside box is 100% sustainably sourced and recyclable • Bulk packaging available		
System Configuration	The configuration used for the Energy Consumption and Declared Noise Emissions data for the Desktop model is based on a Typically Configured Desktop.		
Energy Consumption (in accordance with US ENERGY STAR® test method)	**115VAC, 60Hz**	**230VAC, 50Hz**	**100VAC, 60Hz**
Normal Operation (Short idle)	6.17 W	6.26 W	6.18 W
Normal Operation (Long idle)	N/A	N/A	N/A
Sleep	2.17 W	2.16 W	2.11 W
Off	0.67 W	0.69 W	0.68 W
	NOTE: Energy efficiency data listed is for an ENERGY STAR® compliant product if offered within the model family. HP computers marked with the ENERGY STAR® Logo are compliant with the applicable U.S. Environmental Protection Agency (EPA) ENERGY STAR® specifications for computers. If a model family does not offer ENERGY STAR® compliant configurations, then energy efficiency data listed is for a typically configured PC featuring a hard disk drive, a high efficiency power supply, and a Microsoft Windows® operating system.		
Heat Dissipation*	**115VAC, 60Hz**	**230VAC, 50Hz**	**100VAC, 60Hz**
Normal Operation (Short idle)	21.0 BTU/hr	21.3 BTU/hr	21.1 BTU/hr
Normal Operation (Long idle)	N/A	N/A	N/A
Sleep	7.4 BTU/hr	7.4 BTU/hr	7.2 BTU/hr
Off	2.3 BTU/hr	2.4 BTU/hr	2.3 BTU/hr
	NOTE: Heat dissipation is calculated based on the measured watts, assuming the service level is attained for one hour.		
Declared Noise Emissions (in accordance with ISO 7779 and ISO 9296)	Sound Power (L_{WAd}, bels)	Sound Pressure (L_{pAm}, decibels)	
Typically Configured – Idle	3.0	21	
Fixed Disk–Random writes	3.0	22	
Optical Drive – Sequential reads	3.0	21	
Longevity and Upgrading	This product can be upgraded, possibly extending its useful life by several years. Upgradeable features and/or components contained in the product may include: Spare parts are available throughout the warranty period and or for up to “5” years after the end of production.		

Features

Additional Information	• This product is in compliance with the Restrictions of Hazardous Substances (RoHS) directive - 2011/65/EC. • This HP product is designed to comply with the Waste Electrical and Electronic Equipment (WEEE) Directive – 2002/96/EC. • This product is in compliance with California Proposition 65 (State of California; Safe Drinking Water and Toxic Enforcement Act of 1986). • This product is in compliance with the IEEE 1680 (EPEAT) standard at the Climate+ level, see http://www.epeat.net • Plastics parts weighing over 25 grams used in the product are marked per ISO11469 and ISO1043. • This product is 93.6% recycle-able when properly disposed of at end of life		
Packaging Materials (vary by country)	**External:**	PAPER/Corrugated	1106 g
	Internal:	PAPER/Molded Pulp	676 g
		OTHER/Other	36 g
	The plastic packaging material contains at least 20-30% recycled content.		
	The corrugated paper packaging materials contain at least 35.0% recycled content.		
RoHS Compliance	HP Inc. complies fully with materials regulations. We were among the first companies to extend the restrictions in the European Union (EU) Restriction of Hazardous Substances (RoHS) Directive to our products worldwide through the HP GSE. HP has contributed to the development of related legislation in Europe, as well as China, India, and Vietnam. We believe the RoHS directive and similar laws play an important role in promoting industry-wide elimination of substances of concern. We have supported the inclusion of additional substances—including PVC, BFRs, and certain phthalates—in future RoHS legislation that pertains to electrical and electronics products. We met our voluntary objective to achieve worldwide compliance with the new EU RoHS requirements for virtually all relevant products by July 2013, and we will continue to extend the scope of the commitment to include further restricted substances as regulations continue to evolve. To obtain a copy of the HP RoHS Compliance Statement, see: HP RoHS position statement.		
Material Usage	This product does not contain any of the following substances in excess of regulatory limits (refer to the HP General Specification for the Environment at http://www.hp.com/hpinfo/globalcitizenship/environment/supplychain/gen_specifications.html): • Asbestos • Certain Azo Colorants • Certain Brominated Flame Retardants – may not be used as flame retardants in plastics • Cadmium • Chlorinated Hydrocarbons • Chlorinated Paraffins • Bis(2-Ethylhexyl) phthalate (DEHP) • Benzyl butyl phthalate (BBP) • Dibutyl phthalate (DBP) • Diisobutyl phthalate (DIBP) • Formaldehyde • Halogenated Diphenyl Methanes • Lead carbonates and sulfates • Lead and Lead compounds • Mercuric Oxide Batteries • Nickel – finishes must not be used on the external surface designed to be frequently handled or carried by the user.		

	• Ozone Depleting Substances • Polybrominated Biphenyls (PBBs) • Polybrominated Biphenyl Ethers (PBBEs) • Polybrominated Biphenyl Oxides (PBBOs) • Polychlorinated Biphenyl (PCB) • Polychlorinated Terphenyls (PCT) • Polyvinyl Chloride (PVC) – except for wires and cables, and certain retail packaging has been voluntarily removed from most applications. • Radioactive Substances • Tributyl Tin (TBT), Triphenyl Tin (TPT), Tributyl Tin Oxide (TBTO)
Packaging Usage	HP follows these guidelines to decrease the environmental impact of product packaging: • Design packaging materials for ease of disassembly. • Maximize the use of post-consumer recycled content materials in packaging materials. • Use readily recyclable packaging materials such as paper and corrugated materials. • Reduce size and weight of packages to improve transportation fuel efficiency. • Plastic packaging materials are marked according to ISO 11469 and DIN 6120 standards.
End-of-life Management and Recycling	HP Inc. offers end-of-life HP product return and recycling programs in many geographic areas. To recycle your product, please go to: http://www.hp.com/go/reuse-recycle or contact your nearest HP sales office. Products returned to HP will be recycled, recovered or disposed of in a responsible manner. The EU WEEE directive (2002/95/EC) requires manufacturers to provide treatment information for each product type for use by treatment facilities. This information (product disassembly instructions) is posted on the Hewlett Packard web site at: http://www.hp.com/go/recyclers. These instructions may be used by recyclers and other WEEE treatment facilities as well as HP OEM customers who integrate and re-sell HP equipment. Global Citizenship Report http://www.hp.com/hpinfo/globalcitizenship/gcreport/index.html Eco-label certifications http://www8.hp.com/us/en/hp-information/environment/ecolabels.html ISO 14001 certificates: http://h20195.www2.hp.com/V2/GetDocument.aspx?docname=c04755842 and http://www.hp.com/hpinfo/globalcitizenship/environment/pdf/cert.pdf
Footnotes	• Percentage of ocean-bound plastic and PCR contained in each component varies by product • Recycled plastic content percentage is based on the definition set in the IEEE 1680.1-2018 standard. • 100% outer box packaging and corrugated cushions made from sustainably sourced certified and recycled fibers. • Fiber cushions made from 100% recycled wood fiber and organic materials. • Plastic cushions are made from >90% recycled plastic. • recycled metal is expressed as a percentage of the total weight of the metal according to ISO 14021 definitions for metal parts over 25 grams.

HP EliteStudio 8 All-in-One G1i 23.8-inch Desktop AI PC

Eco-Label Certifications & declarations	This product has received or is in the process of being certified to the following approvals and may be labeled with one or more of these marks: • IT ECO declaration • US ENERGY STAR® • US Federal Energy Management Program (FEMP) • EPEAT® Climate+ registered in the United States. See http://www.epeat.net for registration status in your country.* • TCO Certified • China Energy Conservation Program (CECP) • China State Environmental Protection Administration (SEPA) • Taiwan Green Mark • Korea Eco-label • Japan PC Green label • Commission Regulation (EC) No 617/2013 (ErP Lot 3) **NOTE***: Based on US EPEAT® registration according to IEEE 1680.1-2018 EPEAT®. EPEAT® status varies by country. Visit http://www.epeat.net for more information.		
Sustainable Impact Specifications	• At least 25% ocean bound plastic-PET Bottle in the Fan and 5% ocean bound plastic-PET Bottle in the Speaker[1] • At least 75% of t post-consumer recycled plastic used in system[2] • 95% recycled plastic used in parts • 20% recycled metal used in parts • 20% recycled glass used in display panels • 100% recycled Aluminum used in thermal part and stand part • 100% Recycled Rear earth element (REE) used in speaker • Outside Box and corrugated cushions are 100% sustainably sourced and recyclable[3] • Molded Paper Pulp Cushion inside box is 100% sustainably sourced and recyclable[4]		
System Configuration	The configuration used for the Energy Consumption and Declared Noise Emissions data for the All-in-One PC model is based on a typically configured PC featuring a hard disk drive, a high efficiency power supply, and a Microsoft Windows® operating system.		
Energy Consumption (in accordance with US ENERGY STAR® test method)	**115VAC, 60Hz**	**230VAC, 50Hz**	**100VAC, 50Hz**
Normal Operation (Short idle)	15.07 W	14.03 W	14.11 W
Normal Operation (Long idle)	1.99 W	2.13 W	2.01 W
Sleep	1.99 W	2.13 W	2.01 W
Off	0.78 W	0.77 W	0.79 W
	NOTE: Energy efficiency data listed is for an ENERGY STAR® compliant product if offered within the model family. HP computers marked with the ENERGY STAR® Logo are compliant with the applicable U.S. Environmental Protection Agency (EPA) ENERGY STAR® specifications for computers. If a model family does not offer ENERGY STAR® compliant configurations, then energy efficiency data listed is for a typically configured PC featuring a hard disk drive, a high efficiency power supply, and a Microsoft Windows® operating system.		

Features

Heat Dissipation*	**115VAC, 60Hz**	**230VAC, 50Hz**	**100VAC, 50Hz**
Normal Operation (Short idle)	51.34 BTU/hr	47.84 BTU/hr	48.12 BTU/hr
Normal Operation (Long idle)	6.79 BTU/hr	7.26 BTU/hr	6.85 BTU/hr
Sleep	6.79 BTU/hr	7.26 BTU/hr	6.85 BTU/hr
Off	2.66 BTU/hr	2.63 BTU/hr	2.69 BTU/hr
	NOTE: Heat dissipation is calculated based on the measured watts, assuming the service level is attained for one hour.		

Declared Noise Emissions (in accordance with ISO 7779 and ISO 9296)	Sound Power (L_{WAd}, bels)	Sound Pressure (L_{pAm}, decibels)
Typically Configured – Idle	2.8	14
Fixed Disk – Random writes	3.1	18

Longevity and Upgrading	This product can be upgraded, possibly extending its useful life by several years. Upgradeable features and/or components contained in the product may include: • 6 USB ports • 2 memory slots • 1 Mini PCIe half-length slot • 1 MXM 3.0 Type A - 35W slot • 1 mSATA slot • 1 2.5" internal bay supporting up to Two 2.5" hard drives (HDD/SSD/SED/SSHD) • 1 5.25" external supporting optical drive Spare parts are available throughout the warranty period and or for up to “5” years after the end of production.
Additional Information	• This product is in compliance with the Restrictions of Hazardous Substances (RoHS) directive - 2011/65/EC. • This HP product is designed to comply with the Waste Electrical and Electronic Equipment (WEEE) Directive – 2002/96/EC. • This product is in compliance with California Proposition 65 (State of California; Safe Drinking Water and Toxic Enforcement Act of 1986). • This product is in compliance with the IEEE 1680 (EPEAT) standard at the Climate+ level, see http://www.epeat.net • Plastics parts weighing over 25 grams used in the product are marked per ISO11469 and ISO1043. • This product is 97.5% recycle-able when properly disposed of at end of life.

Packaging Materials			
	External:	PAPER/Paper	1102.6g
		PAPER/Molded Pulp	1650.5g
	Internal:	LDPE	39.6g
	The plastic packaging material contains at least 80% recycled content.		
	The corrugated paper packaging materials contain at least 80% recycled content.		

Features

RoHS Compliance	HP Inc. complies fully with materials regulations. We were among the first companies to extend the restrictions in the European Union (EU) Restriction of Hazardous Substances (RoHS) Directive to our products worldwide through the HP GSE. HP has contributed to the development of related legislation in Europe, as well as China, India, and Vietnam. We believe the RoHS directive and similar laws play an important role in promoting industry-wide elimination of substances of concern. We have supported the inclusion of additional substances—including PVC, BFRs, and certain phthalates—in future RoHS legislation that pertains to electrical and electronics products. We met our voluntary objective to achieve worldwide compliance with the new EU RoHS requirements for virtually all relevant products by July 2013, and we will continue to extend the scope of the commitment to include further restricted substances as regulations continue to evolve. To obtain a copy of the HP RoHS Compliance Statement, see HP RoHS position statement.
Material Usage	This product does not contain any of the following substances in excess of regulatory limits (refer to the HP General Specification for the Environment at http://www.hp.com/hpinfo/globalcitizenship/environment/supplychain/gen_specifications.html): • Asbestos • Certain Azo Colorants • Certain Brominated Flame Retardants – may not be used as flame retardants in plastics • Cadmium • Chlorinated Hydrocarbons • Chlorinated Paraffins • Bis(2-Ethylhexyl) phthalate (DEHP) • Benzyl butyl phthalate (BBP) • Dibutyl phthalate (DBP) • Diisobutyl phthalate (DIBP) • Formaldehyde • Halogenated Diphenyl Methanes • Lead carbonates and sulfates • Lead and Lead compounds • Mercuric Oxide Batteries • Nickel – finishes must not be used on the external surface designed to be frequently handled or carried by the user. • Ozone Depleting Substances • Polybrominated Biphenyls (PBBs) • Polybrominated Biphenyl Ethers (PBBEs) • Polybrominated Biphenyl Oxides (PBBOs) • Polychlorinated Biphenyl (PCB) • Polychlorinated Terphenyls (PCT) • Polyvinyl Chloride (PVC) – except for wires and cables, and certain retail packaging has been voluntarily removed from most applications. • Radioactive Substances • Tributyl Tin (TBT), Triphenyl Tin (TPT), Tributyl Tin Oxide (TBTO)
Packaging Usage	HP follows these guidelines to decrease the environmental impact of product packaging: • Design packaging materials for ease of disassembly. • Maximize the use of post-consumer recycled content materials in packaging materials. • Use readily recyclable packaging materials such as paper and corrugated materials. • Reduce size and weight of packages to improve transportation fuel efficiency. • Plastic packaging materials are marked according to ISO 11469 and DIN 6120 standards.

End-of-life Management and Recycling	HP Inc. offers end-of-life HP product return and recycling programs in many geographic areas. To recycle your product, please go to: http://www.hp.com/go/reuse-recycle or contact your nearest HP sales office. Products returned to HP will be recycled, recovered or disposed of in a responsible manner. The EU WEEE directive (2002/95/EC) requires manufacturers to provide treatment information for each product type for use by treatment facilities. This information (product disassembly instructions) is posted on the Hewlett Packard web site at: http://www.hp.com/go/recyclers. These instructions may be used by recyclers and other WEEE treatment facilities as well as HP OEM customers who integrate and re-sell HP equipment. Global Citizenship Report http://www.hp.com/hpinfo/globalcitizenship/gcreport/index.html Eco-label certifications http://www8.hp.com/us/en/hp-information/environment/ecolabels.html ISO 14001 certificates: http://www.hp.com/hpinfo/globalcitizenship/environment/pdf/PC_GBU_Product_Design_ISO_14K_Certificate.pdf and http://www.hp.com/hpinfo/globalcitizenship/environment/pdf/cert.pdf
HP, Inc. Corporate Environmental Information	For more information about HP's commitment to the environment: Global Citizenship Report http://www.hp.com/hpinfo/globalcitizenship/gcreport/index.html Eco-label certifications http://www8.hp.com/us/en/hp-information/environment/ecolabels.html ISO 14001 certificates: http://h20195.www2.hp.com/V2/GetDocument.aspx?docname=c04755842 and http://www.hp.com/hpinfo/globalcitizenship/environment/pdf/cert.pdf
footnotes	1. Percentage of ocean-bound plastic & PCR contained in each component varies by product. 2. Recycled plastic content percentage is based on the definition set in the IEEE 1680.1-2018 standard. 3. 100% outer box packaging and corrugated cushions made from sustainably sourced certified and recycled fibers. 4. Fiber cushions made from 100% recycled wood fiber and organic materials. 5. Plastic cushions are made from >90% recycled plastic.

HP EliteStudio 8 All-in-One G1i 27-inch Desktop AI PC

Eco-Label Certifications & declarations	This product has received or is in the process of being certified to the following approvals and may be labeled with one or more of these marks: • IT ECO declaration • US ENERGY STAR® • US Federal Energy Management Program (FEMP) • EPEAT® Climate+ registered in the United States. See http://www.epeat.net for registration status in your country.* • TCO Certified • China Energy Conservation Program (CECP) • China State Environmental Protection Administration (SEPA) • Taiwan Green Mark • Korea Eco-label • Japan PC Green label • Commission Regulation (EC) No 617/2013 (ErP Lot 3) **NOTE***: Based on US EPEAT® registration according to IEEE 1680.1-2018 EPEAT®. EPEAT® status varies by country. Visit http://www.epeat.net for more information.

Features

Sustainable Impact Specifications	• At least 25% ocean bound plastic-PET Bottle in the Fan and 5% ocean bound plastic-PET Bottle used in the Speaker[1] • At least 80% of post-consumer recycled plastic used in system[2] • 95% recycled plastic used in parts • 20% recycled metal used in parts • 20% recycled glass used in display panels • 100% recycled Aluminum used in thermal part and Stand part • 100% Recycled Rear earth element (REE) used in speaker • Outside Box and corrugated cushions are 100% sustainably sourced and recyclable[3] • Molded Paper Pulp Cushion inside box is 100% sustainably sourced and recyclable[4]		
System Configuration	The configuration used for the Energy Consumption and Declared Noise Emissions data for the All-in-One PC model is based on a typically configured PC featuring a hard disk drive, a high efficiency power supply, and a Microsoft Windows® operating system.		
Energy Consumption (in accordance with US ENERGY STAR® test method)	**115VAC, 60Hz**	**230VAC, 50Hz**	**100VAC, 60Hz**
Normal Operation (Short idle)	22.99 W	22.65 W	22.30 W
Normal Operation (Long idle)	2.15 W	1.82 W	2.27 W
Sleep	2.15 W	1.82 W	2.27 W
Off	0.77 W	0.78 W	0.78 W
	Note: Energy efficiency data listed is for an ENERGY STAR® compliant product if offered within the model family. HP computers marked with the ENERGY STAR® Logo are compliant with the applicable U.S. Environmental Protection Agency (EPA) ENERGY STAR® specifications for computers. If a model family does not offer ENERGY STAR® compliant configurations, then energy efficiency data listed is for a typically configured PC featuring a hard disk drive, a high efficiency power supply, and a Microsoft Windows® operating system.		
Heat Dissipation*	**115VAC, 60Hz**	**230VAC, 50Hz**	**100VAC, 60Hz**
Normal Operation (Short idle)	78.40 BTU/hr	77.24 BTU/hr	76.04 BTU/hr
Normal Operation (Long idle)	7.33 BTU/hr	6.21 BTU/hr	7.74 BTU/hr
Sleep	7.33 BTU/hr	6.21 BTU/hr	7.74 BTU/hr
Off	2.63 BTU/hr	2.66 BTU/hr	2.66 BTU/hr
	NOTE: Heat dissipation is calculated based on the measured watts, assuming the service level is attained for one hour.		
Declared Noise Emissions (in accordance with ISO 7779 and ISO 9296)	Sound Power (L_{WAd}, bels)	Sound Pressure (L_{pAm}, decibels)	
Typically Configured – Idle	2.8	14	
Fixed Disk – Random writes	3.0	18	

Longevity and Upgrading	This product can be upgraded, possibly extending its useful life by several years. Upgradeable features and/or components contained in the product may include: • 6 USB ports • 2 memory slots • 1 Mini PCIe half-length slot • 1 MXM 3.0 Type A - 35W slot • 1 mSATA slot • 1 2.5" internal bay supporting up to Two 2.5" hard drives (HDD/SSD/SED/SSHD) • 1 5.25" external supporting optical drive Spare parts are available throughout the warranty period and or for up to “5” years after the end of production.
Additional Information	• This product is in compliance with the Restrictions of Hazardous Substances (RoHS) directive - 2011/65/EC. • This HP product is designed to comply with the Waste Electrical and Electronic Equipment (WEEE) Directive – 2002/96/EC. • This product is in compliance with California Proposition 65 (State of California; Safe Drinking Water and Toxic Enforcement Act of 1986). • This product is in compliance with the IEEE 1680 (EPEAT) standard at the Climate+ level, see http://www.epeat.net • Plastics parts weighing over 25 grams used in the product are marked per ISO11469 and ISO1043. • This product is 97.9% recycle-able when properly disposed of at end of life

Packaging Materials	**External:**	Paper/ CORRUGATED	1339g
		Molded pulp	2139g
	Internal:	LDPE	50g
	The plastic packaging material contains at least xx% recycled content.		
	The corrugated paper packaging materials contain at least xx% recycled content.		

RoHS Compliance	HP Inc. complies fully with materials regulations. We were among the first companies to extend the restrictions in the European Union (EU) Restriction of Hazardous Substances (RoHS) Directive to our products worldwide through the HP GSE. HP has contributed to the development of related legislation in Europe, as well as China, India, and Vietnam. We believe the RoHS directive and similar laws play an important role in promoting industry-wide elimination of substances of concern. We have supported the inclusion of additional substances—including PVC, BFRs, and certain phthalates—in future RoHS legislation that pertains to electrical and electronics products. We met our voluntary objective to achieve worldwide compliance with the new EU RoHS requirements for virtually all relevant products by July 2013, and we will continue to extend the scope of the commitment to include further restricted substances as regulations continue to evolve. To obtain a copy of the HP RoHS Compliance Statement, see: HP RoHS position statement.

Material Usage	This product does not contain any of the following substances in excess of regulatory limits (refer to the HP General Specification for the Environment at http://www.hp.com/hpinfo/globalcitizenship/environment/supplychain/gen_specifications.html): • Asbestos • Certain Azo Colorants • Certain Brominated Flame Retardants – may not be used as flame retardants in plastics • Cadmium • Chlorinated Hydrocarbons • Chlorinated Paraffins • Bis(2-Ethylhexyl) phthalate (DEHP) • Benzyl butyl phthalate (BBP) • Dibutyl phthalate (DBP) • Diisobutyl phthalate (DIBP) • Formaldehyde • Halogenated Diphenyl Methanes • Lead carbonates and sulfates • Lead and Lead compounds • Mercuric Oxide Batteries • Nickel – finishes must not be used on the external surface designed to be frequently handled or carried by the user. • Ozone Depleting Substances • Polybrominated Biphenyls (PBBs) • Polybrominated Biphenyl Ethers (PBBEs) • Polybrominated Biphenyl Oxides (PBBOs) • Polychlorinated Biphenyl (PCB) • Polychlorinated Terphenyls (PCT) • Polyvinyl Chloride (PVC) – except for wires and cables, and certain retail packaging has been voluntarily removed from most applications. • Radioactive Substances • Tributyl Tin (TBT), Triphenyl Tin (TPT), Tributyl Tin Oxide (TBTO)
Packaging Usage	HP follows these guidelines to decrease the environmental impact of product packaging: • Design packaging materials for ease of disassembly. • Maximize the use of post-consumer recycled content materials in packaging materials. • Use readily recyclable packaging materials such as paper and corrugated materials. • Reduce size and weight of packages to improve transportation fuel efficiency. • Plastic packaging materials are marked according to ISO 11469 and DIN 6120 standards.
End-of-life Management and Recycling	HP Inc. offers end-of-life HP product return and recycling programs in many geographic areas. To recycle your product, please go to: http://www.hp.com/go/reuse-recycle or contact your nearest HP sales office. Products returned to HP will be recycled, recovered or disposed of in a responsible manner. The EU WEEE directive (2002/95/EC) requires manufacturers to provide treatment information for each product type for use by treatment facilities. This information (product disassembly instructions) is posted on the Hewlett Packard web site at: http://www.hp.com/go/recyclers. These instructions may be used by recyclers and other WEEE treatment facilities as well as HP OEM customers who integrate and re-sell HP equipment.

Features

HP, Inc. Corporate Environmental Information	For more information about HP's commitment to the environment: Global Citizenship Report http://www.hp.com/hpinfo/globalcitizenship/gcreport/index.html Eco-label certifications http://www8.hp.com/us/en/hp-information/environment/ecolabels.html ISO 14001 certificates: http://h20195.www2.hp.com/V2/GetDocument.aspx?docname=c04755842 and http://www.hp.com/hpinfo/globalcitizenship/environment/pdf/cert.pdf
footnotes	1. Percentage of ocean-bound plastic contained in each component varies by product. 2. Recycled plastic content percentage is based on the definition set in the IEEE 1680.1-2018 standard. 3.100% outer box packaging and corrugated cushions made from sustainably sourced certified and recycled fibers. 4. Fiber cushions made from 100% recycled wood fiber and organic materials. 5. Plastic cushions are made from >90% recycled plastic.

SERVICE AND SUPPORT

On-site Warranty[1]: One-year (1-1-1) limited warranty delivers one year of on-site, next business day[2] service for parts and labor support. Service offers terms up to 5 years by choosing an optional HP Care Pack. To choose the right level of service for your HP product, visit HP Care Pack Central: http://www.hp.com/go/cpc.[3]

1. Terms and conditions may vary by country. Certain restrictions and exclusions apply. Other warranty variations may be offered in your region.
2. On-site service may be provided pursuant to a service contract between HP and an authorized HP third-party provider and is not available in certain countries. Global service response times are based on commercially reasonable best effort and may vary by country.
3. Service levels and response times for HP Care Packs may vary depending on your geographic location. Service starts on date of hardware purchase. Restrictions and limitations apply. For details, visit http://www.hp.com/go/cpc. HP services are governed by the applicable HP terms and conditions of service provided or indicated to Customer at the time of purchase. Customer may have additional statutory rights according to applicable local laws, and such rights are not in any way affected by the HP terms and conditions of service or the HP Limited Warranty provided with your HP Product.

CERTIFICATION AND COMPLIANCE

Energy Efficiency Compliance

ENERGY STAR® certified. EPEAT® registered where applicable. EPEAT ® registration varies by country. See http://www.epeat.net for registration status by country. According to IEEE 1680.1-2018.

PROCESSORS

Intel Core Ultra Processors 200S series

All HP EliteDesk G1i Business PC & EiliteStudio G1i AiO models featuring this technology include processors that are part of the Intel® Stable Image Platform Program (SIPP) designed to ensure the stability promise inherent in the value proposition of the HP Elite series G1i Desktop Business PC.

Intel® Management Engine (ME) v19– An advanced set of remote management features and functionality which provides network administrators the latest and most effective tools to remotely discover, heal, and protect networked client systems regardless of the system's health or power state. AMT includes the following advanced management functions:

- Support for configuration of Intel ME 19.0 capabilities
- No reset after provisioning
- Support for Intel Enterprise Digital Fence
- The Platform Discovery Utility can now discover these additional Intel products:
    - Public Key Infrastructure
- Profile Editor and Profile Editor Plugin Interface
- Required Permissions for Solutions Framework

DISPLAY PANEL SPECIFICATIONS

NOTE: All specifications represent the typical specifications provided by HP's component manufacturers; actual performance may vary either higher or lower. For All in One only Intel® HD Graphics (integrated).

23.8" diagonal IPS widescreen WLED backlit anti-glare LCD (1920 x 1080) Projected Capacitive Touch supports up to 10 touch-points

Support HW low blue light feature

Typo	IPS WLED Backlit LCD
Active area (mm)	527.04 x 296.46
Native resolution (HxV)	1920 x 1080
Refresh rate	75 Hz @ 1920 x 1080
Aspect ratio	16:9
Pixel pitch (HxV)(mm)	0.2745 x 0.2745
Contrast ratio	1000:1
Brightness	300nits
Viewing angle (HxV)	178° x 178°
Backlight lamp life (to half brightness)	30,000 hours minimum
Color support	Up to 16.7 million colors with 8 Bit (6 Bit + FRC)
Color gamut	sRGB 99%
Anti-glare	Yes
Response time	14ms
Default color temperature	Warm (6500K)

23.8" diagonal IPS widescreen WLED backlit anti-glare LCD (1920 x 1080) non-touch

Support HW low blue light feature

Type	IPS WLED Backlit LCD
Active area (mm)	527.04 x 296.46
Native resolution (HxV)	1920 x 1080
Refresh rate	75Hz @ 1920 x 1080
Aspect ratio	16:9
Pixel pitch (HxV)(mm)	0.2745 x 0.2745
Contrast ratio	1000:1
Brightness	250nits
Viewing angle (HxV)	178° x 178°
Backlight lamp life (to half brightness)	30,000 hours minimum
Color support	Up to 16.7 million colors with 8 Bit (6 Bit + FRC)
Color gamut	sRGB99%
Anti-glare	Yes
Response time	14ms
Default color temperature	Warm (6500K)

27.0" diagonal IPS widescreen WLED backlit anti-glare LCD (2560 x 1440) non-touch

Support HW low blue light feature

Type	IPS WLED Backlit LCD
Active area (mm)	596.736 x 335.664
Native resolution (HxV)	2560 x 1440
Refresh rate	75 Hz @ 2560 x 1440
Aspect ratio	16:9
Pixel pitch (HxV)(mm)	0.2331 x 0.2331
Contrast ratio	1000:1
Brightness	350 nits
Viewing angle (HxV)	178° x 178°
Backlight lamp life (to half brightness)	30,000 hours minimum
Color support	Up to 16.7 million colors with 8 bit (True)
Color gamut	sRGB99%
Anti-glare	Yes
Response time	14ms
Default color temperature	Warm (6500K)

27.0" diagonal IPS widescreen WLED backlit LCD (2560 x 1440) Touch

Projected Capacitive Touch supports up to 10 touch-points

Support HW low blue light feature

Type	IPS WLED Backlit LCD
Active area (mm)	596.736 x 335.664
Native resolution (HxV)	2560 x 1440
Refresh rate	75 Hz @ 2560 x 1440
Aspect ratio	16:9
Pixel pitch (HxV)(mm)	0.2331 x 0.2331
Contrast ratio	1000:1
Brightness	350nits*
Viewing angle (HxV)	178° x 178°
Backlight lamp life (to half brightness)	30,000 hours minimum
Color support	Up to 16.7 million colors with 8 bit (True)
Color gamut	sRGB99%
Anti-glare	Yes
Response time	14ms
Default color temperature	Warm (6500K)

GRAPHICS

HP EliteDesk 8 Mini G1i Desktop AI PC

Intel® HD Graphics (integrated)
Up to four simultaneous displays, 4K60Hz display concurrent with:

- Single external display up to 8K60Hz, supported by joining two pipes over single port.
- Up to 4x4K60Hz External display (Out of 4 Native video ports + 1 Flex IO option)

VGA Controller	Integrated
DisplayPort™	Supports up to UHBR20
	Support MST (Multi-Stream Transport), Maximum of 3 displays with Daisy-Chain monitor
	Support VESA DSC 1.2b
	Support HDCP
	Support up to 36 BPP (Bit Pre Pixel)
HDMI	Supports HDMI 2.1 features
	Supports up to 6Gbps TMDS link rates on 3 lanes
	Supports up to 12Gbps FRL link rates on 4 lanes
	Supports HDCP 2.3
	Supports audio over HDMI
	Support up to 36 BBP (Bit Pre Pixel)
VGA (optional)	VGA output
USB-C® DP Alt Mode (optional)	DisplayPort™ over the optional USB-C® module
Memory	The actual amount of maximum graphics memory can be >4GB. System memory is allocated for graphics as needed using Intel's Dynamic Video Memory Technology (DVMT), to provide an optimal balance between graphics and system memory use.
Graphics/Video API Support	HEVC (H.265)/VP9 8k@60 12-bit 420/422/444 Decode
	AV1 8K@60 10-bit 420 Decode
	AVC 4k@60 8bit 420 Decode
	HDR
	Direct3D* 2015 /Dircet3D 12/Direct3D 11.2/Direct/Direct3D11.1/Direct3D 10/Direct2D
	OpenGL* 4.5
	OpenCL* 3.0
	Direct X* 12
Max resolution (Native DP)	DP2.1 (HBR3) 7680 x 4320 @60hz (with DSC)
Max resolution (Native HDMI)	4096 x 2160 @60Hz HMDI 2.1 (TMDS 6Gbps) 4K @60HZ 24bpp
Max resolution (Native Thunderbolt 4)	DP ALT Mode DP2.1 UHBR20 7680 x 4320 @60Hz
Max resolution (option VGA)	2048 x 1536 @60Hz
Max resolution (option DP)	UHBR20: 8K @60Hz compressed, 5K @120Hz compressed

Technical Specifications – Graphics

Max resolution (option HDMI)	HDMI2.1 (FRL 12G bps) 8K60Hz Compressed, 5K @120Hz compressed, 4K @144Hz compressed
Max resolution (optional Thunderbolt 4)	DP ALT Mode DP2.1 UHBR20 7680 x 4320 @60Hz

NVIDIA® GeForce® RTX 5050 8GB GDDR7 Graphics card

DisplayPort™	Supports up to UHBR20
	Support MST (Multi-Stream Transport), Maximum of 3 displays with Daisy-Chain monitor
	Support VESA DSC 1.2a
	Maximum resolution with CVT-RB timing: 8K@240Hz (With DSC)
	16K@60Hz (With DSC)
	Maximum line width per head with DSC is 5120 pixels
	4:4:4 (RGB or YUV) pixel format at 8,10, or 12 bpp is support
	4:2:2 and 4:2:0 pixel formats are not supported
HDMI	Supports HDMI 2.1b features
	TMDS mode :
	Maximum pixel clock :
	4:4:4 or 4:2:2 pixel format:600MHz
	4:2:0 pixel format :1200MHz
	Maximum resolution: 4096x2160x24 bpp @60Hz
	FRL mode :
	Maximum pixel clock:2069MHz
	Maximum resolution:
	6780 x4320 x36 bpp YUV420 or DSC @60Hz

HP EliteDesk 8 SFF G1i Desktop AI PC

Intel® HD Graphics (integrated)
Up to four simultaneous displays, 4K60Hz display concurrent with:
— Single external display up to 8K60Hz, supported by joining two pipes over single port.
— Up to 4x4K60Hz External display (3 Native video ports + 1 Flex IO options).

VGA Controller	Integrated
DisplayPort™	Multimode capable; supports HDCP, Display Port Audio), Native support HBR3 link rates/option DP support to UHBR20 and Multi-Stream Technology for a maximum of 3-displays connected to any output controlled by Intel® Graphics
HDMI (Native / optional)	Supports HDMI 2.1 features (Native HDMI support HDMI TMDS 6G; Option HDMI support HDMI 2.1 FRL12) Supports HDCP 2.3 (Support HDCP 1.4/2.3) Supports audio over HDMI
VGA (optional)	VGA output
USB-C® DP Alt Mode (optional)	DisplayPort™ over the optional USB-C® module (Support DP1.4 HBR3)
Memory	The actual amount of maximum graphics memory can be >4GB. System memory is allocated for graphics as needed using Intel's Dynamic Video Memory Technology (DVMT), to provide an optimal balance between graphics and system memory use.
Maximum Color Depth	Supports up to 36 BPP (Bit Per Pixel)
Graphics/Video API Support	Decode: HEVC (H.265)/VP9 8K60 12-bit 420/422/444*, AV1 8K60 10-bit 420, AVC 4K60 8-bit 420 Encode: HEVC (H.265)/VP9 8K30 10-bit 420/444*, AV1 8K30 10-bit 420 (FF accel), AVC 4K60 8-bit 420 HDR Dolby Vision 420/422 w/ DSC 1.2 DX12 Ultimate
Max. Resolution (VGA Option)	2048 x 1536 @60Hz
Max. Resolution (Native HDMI)	HDMI TMDS 6G: 4096 x 2160 @60Hz
Max. Resolution (Option HDMI)	HDMI2.1 FRL 12G: 8K @60Hz Compressed, 5K @120Hz compressed, 4K @144Hz compressed
Max. Resolution (Native DP)	DP2.1 HBR3: 7680 x 4320 @60Hz (with DSC)
Max. Resolution (Option DP)	DP2.1 UHBR20: 8K @60Hz compressed, 5K@120Hz compressed
Max. Resolution (Option Type C)	DP HBR3: 7680 x 4320 @60Hz (with DSC)
Max resolution (option Thunderbolt 4)	DP ALT Mode DP2.1 UHBR20 7680 x 4320 @60Hz

AMD Radeon™ RX 6300 2GB GDDR6 Graphics card

Engine Clock	Base: 1512 Mhz Boost: 2040 Mhz
Memory Size / Width	2GB / 32bit
Graphic Memory Type / Clock	512Mx32 GDDR6 ,1 pcs / 16Gbps
Max. Resolution (HDMI)	7680 x 4320 @60Hz
Max. Resolution (DP)	7680 x 4320 @120Hz

Technical Specifications – Graphics

Multi Display Support	2 displays
HDCP Compliance	Yes
Rear I/O connectors (bracket)	HDMIx1+ DPx1 (LP)
Cooling (active/passive)	Active
Total power consumption (W)	57W
Form-factor	X:160.2mm/Y:68.9mm/Z: 22.6mm PCB with single slot

NVIDIA® RTX A1000 8GB GRAPHICS

GPU Clocks	Base: 721 Mhz Boost: 1462 Mhz
Memory size / Bus Width	8GB / 128bits
Graphic Memory Type / Clock	8GB GDDR6/6001MHz
Max. Resolution (DP1.4a)	7680 x 4320 x 24bpp @120Hz/60Hz
Multi Display Support	4 displays
HDCP Compliance	Yes
Rear I/O connectors (bracket)	mDPx4
Cooling (active/passive)	Active
Total power consumption (W)	50W
Form Factor	H: 2.7"(68.58mm) x L: 6.4"(162.56mm), single slot

NVIDIA® RTX A400 4GB Graphics

GPU Clocks	Base: 1417 Mhz Boost: 1762 Mhz
Memory size / Bus Width	4GB / 64 bits
Graphic Memory Type / Clock	4GB GDDR6/6001MHz
Max. Resolution (DP1.4a)	7680 x 4320 x 24bpp @120Hz/60Hz
Multi Display Support	4 displays
HDCP Compliance	Yes
Rear I/O connectors (bracket)	mDPx4
Cooling (active/passive)	Active
Total power consumption (W)	50W
Form Factor	H: 2.7"(68.58mm) x L: 6.4"(162.56mm), single slot

HP EliteDesk 8 Tower G1i / G1i E Desktop AI PC

Intel® HD Graphics (integrated)
Up to four simultaneous displays, 4K60Hz display concurrent with:
— Single external display up to 8K60Hz, supported by joining two pipes over single port.
— Up to 4x4K60Hz External display. (3 Native video ports + 1 Flex IO options)

VGA Controller	Integrated
DisplayPort™	Multimode capable; supports HDCP, Display Port Audio), Native support HBR2 link rates/option DP support to HBR3 and Multi-Stream Technology for a maximum of 3-displays connected to any output controlled by Intel® Graphics
HDMI (Native / optional)	Supports HDMI 2.1 features (Native HDMI support HDMI TMDS 6G; Option HDMI support HDMI 2.1 FRL12) Supports HDCP 2.3 (Support HDCP 1.4/2.3) Supports audio over HDMI
VGA (optional)	VGA output
USB-C® DP Alt Mode (optional)	DisplayPort™ over the optional USB-C® module (Support DP1.4 HBR3)
Memory	The actual amount of maximum graphics memory can be >4GB. System memory is allocated for graphics as needed using Intel's Dynamic Video Memory Technology (DVMT), to provide an optimal balance between graphics and system memory use.
Maximum Color Depth	Supports up to 36 BPP (Bit Per Pixel)
Graphics/Video API Support	Decode: HEVC (H.265)/VP9 8K60 12-bit 420/422/444*, AV1 8K60 10-bit 420, AVC 4K60 8-bit 420 Encode: HEVC (H.265)/VP9 8K30 10-bit 420/444*, AV1 8K30 10-bit 420 (FF accel, AVC 4K60 8-bit 420 HDR Dolby Vision 420/422 w/ DSC 1.2 DX12 Ultimate
Max. Resolution (VGA Option)	2048 x 1536@60Hz
Max. Resolution (Native HDMI)	HDMI TMDS 6G: 4096 x 2160 @60Hz
Max. Resolution (Option HDMI)	HDMI2.1 FRL 12G: 8K60Hz Compressed, 5K120Hz compressed, 4K144Hz compressed
Max. Resolution (On board DP)	DP2.1 HBR3: 7680 x 4320 @60Hz (with DSC)
Max. Resolution (Option DP)	DP2.1 UHBR20: 8K60Hz compressed, 5K120Hz compressed
Max. Resolution (Option Type C)	DP HBR3: 7680 x 4320 @60Hz (with DSC)
Max resolution (option Thunderbolt 4)	DP ALT Mode DP2.1 UHBR20 7680 x 4320 @60Hz

NVIDIA® GeForce® RTX 5060 Ti Graphics Card

Engine Clock	Base: 2407 MHz Boost: 2572 MHz
Frame Buffer Size / Width	16GB / 128bit
Graphic Memory Type / Clock	8 pcs of 512Mx32 16Gb GDDR7/28Gps
Max. Resolution (HDMI)	HDMI 2.1b / 7680 × 4320 × 24bpp YUV420 or DSC at 60Hz
Max. Resolution (DP)	DP 2.1a / 7680 × 4320 × 24 bpp at 120 Hz
Multi Display Support	Up to four simultaneous displays with 4K at 144 Hz or two simultaneous displays with 8K at 60 Hz
HDCP Compliance	Yes
Rear I/O connectors (bracket)	HDMIx1+ DPx3
Cooling (active/passive)	Active fansink with 4 pin fan control
Total power consumption (W)	180W
PCB form-factor with bracket	ATX (X:203mm/Y:111.15mm/Z: 44.5mm, 2.5 slot)

NOTE: 16 pins connector requires for RTX5060 Ti with 500W PSU

NVIDIA GeForce RTX 5060 8 GB GDDR7 FH PCIe x16 Graphics

Engine Clock	Base: 2280 MHz Boost: 2497 MHz
Frame Buffer Size / Width	8GB / 128bit
Graphic Memory Type / Clock	512Mx 32 GDDR7 @4pcs / 28Gps
Max. Resolution (HDMI)	4096 x 2160 x 36bpp @120Hz or 7680 x 4320 36bpp DSC @60Hz
Max. Resolution (DP)	3840 x 2160 x 30bpp @120Hz or 7680 x 4320 36bpp @60Hz
Multi Display Support	Up to 4 display
HDCP Compliance	Yes
Rear I/O connectors (bracket)	HDMIx1+ DPx3
Cooling (active/passive)	Active fansink with 4 pin fan control
Total power consumption (W)	145 W
Card dimension	ATX: (X:188mm/Y:111.15mm/Z: 38.0mm)

NOTE: 8 pins connector requires for RTX5060 with 400W PSU or 500W PSU

NVIDIA® GeForce® RTX 3050 8GB GDDR6 Graphics Card

Engine Clock	Base: 1515 Mhz Boost: 1755 Mhz
Frame Buffer Size / Width	8GB/128bit
Graphic Memory Type / Clock	512M x32 GDDR6 @ 4 pcs/14Gbps
Max. Resolution (HDMI)	7680 x 4320 @60Hz
Max. Resolution (DP)	7680 x 4320 @60Hz
Multi Display Support	4 displays
HDCP Compliance	Yes
Rear I/O connectors (bracket)	HDMIx1+ DPx3
Cooling (active/passive)	Active fansink with 4 pin fan control
Total power consumption (W)	120W

Technical Specifications – Graphics

Form-factor	ATX (X:144.7mm/Y:111.15mm/Z: 36.70mm) PCB with ATX dual slot bracket

NOTE: PCIe 2x4 power connector requires for RTX3050 with 400W PSU

NVIDIA® RTX A400 4GB Graphics

GPU Clocks	Base: 1417 Mhz Boost: 1762 Mhz
Memory size / Bus Width	4GB / 64 bits
Graphic Memory Type / Clock	4GB GDDR6/6001MHz
Max. Resolution (DP1.4a)	7680 x 4320 x 24bpp @120Hz/60Hz
Multi Display Support	4 displays
HDCP Compliance	Yes
Rear I/O connectors (bracket)	mDPx4
Cooling (active/passive)	Active
Total power consumption (W)	50W
Form Factor	H: 2.7"(68.58mm) x L: 6.4"(162.56mm), single slot

Intel® Arc™ A380 6GB GDDR6 Graphics card[4]

Engine Clock	2150Mhz
Frame Buffer Size / Width	6GB/96bit
Graphic Memory Type / Clock	GDDR6 ,3 pcs/15.5Gbps
Max. Resolution (HDMI)	4096 x 2160@60Hz
Max. Resolution (DP)	7680 x 4 320@60Hz
Multi Display Support	4 displays
HDCP Compliance	Yes
Rear I/O connectors (bracket)	DP x3 + HDMI x1
Cooling (active/passive)	Active
Total power consumption (W)	75W

AMD Radeon™ RX 6300 2GB GDDR6 Graphics card

Engine Clock	Base: 1512 Mhz Boost: 2040 Mhz
Memory Size/Width	2GB/32bit
Graphic Memory Type/Clock	512M x3 2 GDDR6 ,1 pcs/16Gbps
Max. Resolution (HDMI)	7680 x 4320@60Hz
Max. Resolution (DP)	7680 x 4320@120Hz
Multi Display Support	2 displays
HDCP Compliance	Yes
Rear I/O connectors (bracket)	HDMIx1+ DPx1 (FH)
Cooling (active/passive)	Active
Total power consumption (W)	57W
Form-factor	X:160.2mm/Y:68.9mm/Z: 22.6mm PCB with single slot

HP EliteStudio 8 All-in-One G1i 23.8-inch Desktop AI PC

Intel® UHD Graphics (integrated)	
VGA Controller	Integrated
DisplayPort™ 2.1	Supports up to UHBR20 Support MST (Multi-Stream Transport), Maximum of 3 displays with Daisy-Chain monitor Support VESA DSC 1.2b Support HDCP Support up to 36 BP
USB-C® DP Alt Mode	DisplayPort™ over the optional USB-C® module (Support DP1.4 HBR3)
HDMI (Native)	Supports HDMI 2.1 features (Native HDMI support HDMI TMDS 6G; Option HDMI support HDMI 2.1 FRL12) Supports HDCP 2.3 (Support HDCP 1.4/2.3) Supports audio over HDMI
Memory	The actual amount of maximum graphics memory can be >4GB. System memory is allocated for graphics as needed using Intel's Dynamic Video Memory Technology (DVMT), to provide an optimal balance between graphics and system memory use.
Maximum Color Depth	Supports up to 36 BPP (Bit Per Pixel)
Graphics/Video API Support	Decode: HEVC (H.265)/VP9 8K60 12-bit 420/422/444*, AV1 8K60 10-bit 420, AVC 4K60 8-bit 420 Encode: HEVC (H.265)/VP9 8K30 10-bit 420/444*, AV1 8K30 10-bit 420 (FF accel), AVC 4K60 8-bit 420 HDR Dolby Vision 420/422 w/ DSC 1.2 DX12 Ultimate
Max. Resolution (DP)	UHBR20: 8K60Hz compressed, 5K120Hz compressed
Max. Resolution (Type C)	5120 x 3200@60Hz

HP EliteStudio 8 All-in-One G1i 27-inch Desktop AI PC

Intel® UHD Graphics (integrated)	
VGA Controller	Integrated
DisplayPort™ 2.1	Supports up to UHBR20
	Support MST (Multi-Stream Transport), Maximum of 3 displays with Daisy-Chain monitor
	Support VESA DSC 1.2b
	Support HDCP
	Support up to 36 BP
HDMI (Native)	Supports HDMI 2.1 features (Native HDMI support HDMI TMDS 6G; Option HDMI support HDMI 2.1 FRL12)
	Supports HDCP 2.3 (Support HDCP 1.4/2.3)
	Supports audio over HDMI
USB-C® DP Alt Mode	DisplayPort™ over the optional USB-C® module (Support DP1.4 HBR3)
Memory	The actual amount of maximum graphics memory can be >4GB. System memory is allocated for graphics as needed using Intel's Dynamic Video Memory Technology (DVMT), to provide an optimal balance between graphics and system memory use.
Maximum Color Depth	Supports up to 36 BPP (Bit Per Pixel)
Graphics/Video API Support	Decode: HEVC (H.265)/VP9 8K60 12-bit 420/422/444*, AV1 8K60 10-bit 420, AVC 4K60 8-bit 420 Encode: HEVC (H.265)/VP9 8K30 10-bit 420/444*, AV1 8K30 10-bit 420 (FF accel), AVC 4K60 8-bit 420 HDR Dolby Vision 420/422 w/ DSC 1.2 DX12 Ultimate HEVC (H.265) 10b Enc/Dec HW VP9 10b Dec HW HDR Rec. 2020 DX12
Max. Resolution (DP)	UHBR20: 8K60Hz compressed, 5K120Hz compressed
Max. Resolution (Type C)	5120 x 3200@60Hz

STORAGE

NOTE: Starting November 1, 2023, HP PCs with Windows require Windows to be installed on SSD.
HDD can only be configured as additional data drives and not as the boot drive.

1TB 7200RPM 3.5in SATA HDD

Capacity	1TB
Rotational Speed	7,200 rpm
Interface	SATA 6 Gb/s
Buffer Size	64 MB
Logical Blocks	1,953,525,168
Seek Time	11 ms (Average)
Height	1 in/2.54 cm
Width (nominal)	Media diameter: 3.5 in/8.89 cm Physical size: 4 in/10.2 cm
Operating Temperature	41° to 131° F (5° to 55° C)

NOTE: For storage drives, GB = 1 billion bytes. TB = 1 trillion bytes. Actual formatted capacity is less. Up to 36GB (for Windows) is reserved for system recovery software.

2TB 7200RPM 3.5in SATA HDD

Capacity	2TB
Rotational Speed	7,200 rpm
Interface	SATA 6 Gb/s
Buffer Size	128 MB
Logical Blocks	3,907,050,336
Seek Time	11 ms (Average)
Height	1.028 in/26.11 mm
Width (nominal)	Media diameter: 3.5 in/88.9 mm Physical size: 4 in/102 mm
Operating Temperature	41° to 131° F (5° to 55° C)

NOTE: For storage drives, GB = 1 billion bytes. TB = 1 trillion bytes. Actual formatted capacity is less. Up to 36GB (for Windows) is reserved for system recovery software.

256GB M.2 2280 PCIe NVMe SSD

Capacity	256GB
Interface	PCIE Gen4x4
Minimum Sequential Read	3100 MB/s ±20%
Minimum Sequential Write	1200 MB/s ±20%
Logical Blocks	500,118,192
Features	TRIM; L1.2

NOTE: For storage drives, GB = 1 billion bytes. TB = 1 trillion bytes. Actual formatted capacity is less. Up to 36GB (for Windows) is reserved for system recovery software.

512GB M.2 2280 PCIe NVMe SSD

Capacity	512GB
Interface	PCIE Gen4x4
Minimum Sequential Read	3500 MB/s ±20%
Minimum Sequential Write	1600 MB/s ±20%
Logical Blocks	1,000,215,216
Features	TRIM; L1.2

NOTE: For storage drives, GB = 1 billion bytes. TB = 1 trillion bytes. Actual formatted capacity is less. Up to 36GB (for Windows) is reserved for system recovery software.

1TB M.2 2280 PCIe NVMe SSD

Capacity	1TB
Interface	PCIE Gen4x4
Minimum Sequential Read	3500 MB/s ±20%
Minimum Sequential Write	2700 MB/s ±20%
Logical Blocks	2,000,409,264
Features	TRIM; L1.2

NOTE: For storage drives, GB = 1 billion bytes. TB = 1 trillion bytes. Actual formatted capacity is less. Up to 36GB (for Windows) is reserved for system recovery software.

512GB PCIe Gen5 NVMe™ Value 2280 Solid State Drive

Capacity	512GB
Interface	PCIE Gen5
Minimum Sequential Read	7000 MB/s
Minimum Sequential Write	6000 MB/s
Logical Blocks	1,000,215,216
Features	TRIM; L1.2; Pyrite 2.0

NOTE: For storage drives, GB = 1 billion bytes. TB = 1 trillion bytes. Actual formatted capacity is less. Up to 36GB (for Windows) is reserved for system recovery software.

1TB PCIe Gen5 NVMe™ Value 2280 Solid State Drive

Capacity	1TB
Interface	PCIE Gen5
Minimum Sequential Read	7000 MB/s
Minimum Sequential Write	6000 MB/s
Logical Blocks	2,000,409,264
Features	TRIM; L1.2; Pyrite 2.0

NOTE: For storage drives, GB = 1 billion bytes. TB = 1 trillion bytes. Actual formatted capacity is less. Up to 36GB (for Windows) is reserved for system recovery software.

2TB PCIe Gen5 NVMe™ Value 2280 Solid State Drive

Capacity	2TB
Interface	PCIE Gen5
Minimum Sequential Read	7000 MB/s
Minimum Sequential Write	6000 MB/s
Logical Blocks	4,000,797,360
Features	TRIM; L1.2; Pyrite 2.0

NOTE: For storage drives, GB = 1 billion bytes. TB = 1 trillion bytes. Actual formatted capacity is less. Up to 36GB (for Windows) is reserved for system recovery software.

512GB M.2 2280 PCIe NVMe Three Layer Cell SSD

Capacity	512GB
Interface	PCIE Gen4x4
Minimum Sequential Read	6400 MB/s ±20%
Minimum Sequential Write	3500 MB/s ±20%
Logical Blocks	1,000,215,216
Features	TRIM; L1.2; Pyrite 2.0

NOTE: For storage drives, GB = 1 billion bytes. TB = 1 trillion bytes. Actual formatted capacity is less. Up to 36GB (for Windows) is reserved for system recovery software.

1TB M.2 2280 PCIe NVMe Three Layer Cell SSD

Capacity	1TB
Interface	PCIE Gen4x4
Minimum Sequential Read	6400 MB/s ±20%
Minimum Sequential Write	5000 MB/s ±20%
Logical Blocks	2,000,409,264
Features	TRIM; L1.2; Pyrite 2.0

NOTE: For storage drives, GB = 1 billion bytes. TB = 1 trillion bytes. Actual formatted capacity is less. Up to 36GB (for Windows) is reserved for system recovery software.

2TB M.2 2280 PCIe NVMe Three Layer Cell SSD

Capacity	2TB
Interface	PCIE Gen4x4
Minimum Sequential Read	6400 MB/s ±20%
Minimum Sequential Write	5000 MB/s ±20%
Logical Blocks	4,000,797,360
Features	TRIM; L1.2; Pyrite 2.0

NOTE: For storage drives, GB = 1 billion bytes. TB = 1 trillion bytes. Actual formatted capacity is less. Up to 36GB (for Windows) is reserved for system recovery software.

256GB M.2 2280 PCIe NVMe Self Encrypted OPAL2 Value SSD

Capacity	256GB
Interface	PCIE NVMe
Minimum Sequential Read	3100 MB/s ±20%
Minimum Sequential Write	1200 MB/s ±20%
Logical Blocks	500,118,192
Features	TRIM; L1.2; TCG Opal 2.0

NOTE: For storage drives, GB = 1 billion bytes. TB = 1 trillion bytes. Actual formatted capacity is less. Up to 36GB (for Windows) is reserved for system recovery software.

512GB M.2 2280 PCIe NVMe Self Encrypted OPAL2 Three Layer Cell SSD

Capacity	512GB
Interface	PCIE Gen4x4
Minimum Sequential Read	6400 MB/s ±20%
Minimum Sequential Write	3500 MB/s ±20%
Logical Blocks	1,000,215,216
Features	TRIM; L1.2; TCG Opal 2.0

NOTE: For storage drives, GB = 1 billion bytes. TB = 1 trillion bytes. Actual formatted capacity is less. Up to 36GB (for Windows) is reserved for system recovery software.

OPTICAL DISC DRIVES

HP 9.5mm Slim DVD-ROM Drive

Height	9.5 mm height
Orientation	Either horizontal or vertical
Interface type	SATA/ATAPI
Dimensions (W x H x D)	5.04 x 0.37 x 5.0 in (128 x 9.5 x 127 mm) without bezel
Weight (max)	Up to 0.31 lb (140g) without bezel
Read Speeds	DVD+R/-R/+RW/ -RW/+R DL /-R DL Up to 8X DVD-ROM Up to 8X CD-ROM, CD-R Up to 24X CD-RW Up to 24X
Access time (typical reads, including settling)	Random: DVD-ROM: 170 ms (typical), CD-ROM: 170 ms (typical) Full stroke: DVD-ROM: 320 ms (typical), CD-ROM: 320 ms (typical)
Power	Source Slimline SATA DC power receptacle DC Power Requirement 5 VDC ± 5%-100 mV ripple p-p DC Current 5 VDC (< 1000 mA typical, 1600 mA maximum)
Environmental conditions (operating - non-condensing)	Temperature 41° to 122° F (5° to 50° C) Relative Humidity 10% to 80% Maximum Wet Bulb Temperature 84° F (29° C)

HP 9.5mm Slim DVD Writer Drive

Height	9.5 mm height
Orientation	Either horizontal or vertical
Interface type	SATA/ATAPI
Disc recording capacity	Up to 8.5 GB DL or 4.7 GB standard
Dimensions (W x H x D)	5.04 x 0.37 x 5.0 in (128 x 9.5 x 127 mm) without bezel
Weight (max)	0.31 lb (140 g)
Write Speeds	DVD-R DL - Up to 6X DVD+R - Up to 8X DVD+RW - Up to 8X DVD+R DL - Up to 6X DVD-R - Up to 8X DVD-RW - Up to 6X CD-R - Up to 24X CD-RW - Up to 10X DVD-RW, DVD+RW - Up to 8X
Read Speeds	DVD-R DL, DVD+R DL - Up to 8X DVD+R, DVD-R - Up to 8X DVD-ROM DL, DVD-ROM - Up to 8X CD-ROM, CD-R - Up to 24X CD-RW - Up to 24X
Access time (typical reads, including settling)	Random DVD-ROM: 170 ms (typical), CD-ROM: 170 ms (typical) Full Stroke DVD-ROM: 320 ms (typical), CD-ROM: 320 ms (typical) Stop Time 6 seconds (typical)
Power	Source Slimline SATA DC power receptacle DC Power Requirement 5 VDC ± 5%-100 mV ripple p-p DC Current 5 VDC (< 1000 mA typical, 1600 mA maximum)
Environmental conditions (operating - non-condensing)	Temperature 41° to 122° F (5° to 50° C) Relative Humidity 10% to 80% Maximum Wet Bulb Temperature 84° F (29° C)

NETWORKING AND COMMUNICATIONS

Intel® I219-LM 1 Gigabit Network Connection LOM (vPro)	
Connector	RJ-45
System Interface	PCI (Intel proprietary) + SMBus
Data rates supported	10 Mbit/s operation (10BASE-T; IEEE 802.3i; IEEE 802.3 clauses 13-14) 100 Mbit/s operation (100BASE-TX; IEEE 802.3u; IEEE 802.3 clauses 21-30) 1000 Mbit/s operation (1000BASE-T; IEEE 802.3ab; IEEE 8023 clauses 40) Auto-Negotiation (Automatic Speed Selection) Full Duplex Operation at all Speeds, Half Duplex operation at 10 and 100 Mbit/s
IEEE Compliance	IEEE 802.1p QoS (Quality of Service) Support IEEE 802.1q VLAN support IEEE 802.3x Flow Control (IEEE 802.3 clauses 31-32; configurable) IEEE 802.3az EEE (Energy Efficient Ethernet)
Performance	TCP/IP/UDP Checksum Offload (configurable) Protocol Offload (ARP & NS) Large send offload and Giant send offload Receiving Side Scaling (Hash Mode Only) Jumbo Frame 9K
Power consumption	Cable Disconnetion: 25mW 100Mbps Full Run: 450mW 1000bp Full Run: 1000mW WoL Enable(S3/S4/S5): 50mW WoL Disable(S3/S4/S5): 25mW
Power Management	ACPI compliant – multiple power modes Situation-sensitive features reduce power consumption Advanced link down power saving for reducing link down power consumption
Management Interface	Auto MDI/MDIX Crossover cable detection
IT Manageability	Wake-on-LAN from modern standby or sleep state (Magic Packet and Microsoft Wake-Up Frame); Wake-on-LAN from off (Magic Packet only) PXE 2.1 Remote Boot Statistics Gathering (SNMP MIB II, Ethernet-like MIB, Ethernet MIB (802.3x, clause 30)) Comprehensive diagnostic and configuration software suite Virtual Cable Doctor for Ethernet cable status
Security & Manageability	Intel® vPro™ support with appropriate Intel® chipset components

Intel I226-T1 2.5GbE Ethernet Network Adapter	
Connector	RJ-45
System Interface	PCI (Intel proprietary) + SMBus
Data rates supported	1. 10 Mbit/s operation (10BASE-T; IEEE 802.3i; IEEE 802.3 clauses 13-14) 2. 100 Mbit/s operation (100BASE-TX; IEEE 802.3u; IEEE 802.3 clauses 21-30) 3. 1000 Mbit/s operation (1000BASE-T; IEEE 802.3ab; IEEE 802.3 clauses 40) 4. 2.5 Gbit/s operation(2.5GBASE-T; IEEE 802.3bz Clause 126) 5. Auto-Negotiation (Automatic Speed Selection) Full Duplex Operation at all Speeds, Half Duplex operation at 10 & 100 Mbit/s

Technical Specifications – Networking and Communications

IEEE Compliance	IEEE 802.1p QoS (Quality of Service) Support IEEE 802.1q VLAN support IEEE 802.3x Flow Control (IEEE 802.3 clauses 31-32; configurable) IEEE 802.3az EEE (Energy Efficient Ethernet) IEEE 802.3i 10BASE-T IEEE 802.3u 100BASE-TX IEEE 802.3ab 1000BAE-T IEEE 802.3bz 2.5GBASE-T
Performance	TCP/IP/UDP Checksum Offload (configurable) Protocol Offload (ARP & NS) Large send offload and Giant send offload Receiving Side Scaling (Hash Mode Only) Jumbo Frame 9K
Power consumption	Cable Disconnection: 25mW 100Mbps Full Run: 450mW 1000Mbp Full Run: 1000mW 2500Mbp Full Run: 4500mW WoL Enable(S3/S4/S5): 50mW WoL Disable(S3/S4/S5): 25mW
Power Management	ACPI compliant – multiple power modes Situation-sensitive features reduce power consumption Advanced link down power saving for reducing link down power consumption
Management Interface	Auto MDI/MDIX Crossover cable detection
IT Manageability	Wake-on-LAN from modern standby or sleep state (Magic Packet and Microsoft Wake-Up Frame); Wake-on-LAN from off (Magic Packet only) PXE 2.1 Remote Boot Statistics Gathering (SNMP MIB II, Ethernet-like MIB, Ethernet MIB (802.3x, clause 30)) Comprehensive diagnostic and configuration software suite Virtual Cable Doctor for Ethernet cable status

Intel® I226-V 2.5 Gigabit Network Connection LOM (non-vPro)	
Connector	RJ-45
System Interface	PCI (Intel proprietary) + SMBus
Data rates supported	1. 10 Mbit/s operation (10BASE-T; IEEE 802.3i; IEEE 802.3 clauses 13-14) 2. 100 Mbit/s operation (100BASE-TX; IEEE 802.3u; IEEE 802.3 clauses 21-30) 3. 1000 Mbit/s operation (1000BASE-T; IEEE 802.3ab; IEEE 802.3 clauses 40) 4. 2.5 Gbit/s operation (2.5GBASE-T; IEEE 802.3bz Clause 126) 5. Auto-Negotiation (Automatic Speed Selection) Full Duplex Operation at all Speeds, Half Duplex operation at 10& 100 Mbit/s
IEEE Compliance	IEEE 802.1p QoS (Quality of Service) Support IEEE 802.1q VLAN support IEEE 802.3x Flow Control (IEEE 802.3 clauses 31-32; configurable) IEEE 802.3az EEE (Energy Efficient Ethernet) IEEE 802.3i 10BASE-T IEEE 802.3u 100BASE-TX IEEE 802.3ab 1000BAE-T IEEE 802.3bz 2.5GBASE-T
Performance	TCP/IP/UDP Checksum Offload (configurable) Protocol Offload (ARP & NS) Large send offload and Giant send offload Receiving Side Scaling (Hash Mode Only) Jumbo Frame 9K

Technical Specifications – Networking and Communications

Power consumption	Cable Disconnection: 25mW 100Mbps Full Run: 450mW 1000Mbp Full Run: 1000mW 2500Mbp Full Run: 4500mW WoL Enable(S3/S4/S5): 50mW WoL Disable(S3/S4/S5): 25mW
Power Management	ACPI compliant – multiple power modes Situation-sensitive features reduce power consumption Advanced link down power saving for reducing link down power consumption
Management Interface	Auto MDI/MDIX Crossover cable detection
IT Manageability	Wake-on-LAN from modern standby or sleep state (Magic Packet and Microsoft Wake-Up Frame); Wake-on-LAN from off (Magic Packet only) PXE 2.1 Remote Boot Statistics Gathering (SNMP MIB II, Ethernet-like MIB, Ethernet MIB (802.3x, clause 30)) Comprehensive diagnostic and configuration software suite Virtual Cable Doctor for Ethernet cable status
Security & Manageability	Intel® non-vPro™ support with appropriate Intel® chipset components

Intel BE200 Wi-Fi 7 +Bluetooth® 5.4 Wireless Card M.2 320MHz PCIe World-wide WLAN vPro[1]	
Wireless LAN Standards	IEEE 802.11a IEEE 802.11b IEEE 802.11g IEEE 802.11n IEEE 802.11ac IEEE 802.11ax IEEE 802.11be IEEE 802.11d IEEE 802.11e IEEE 802.11h IEEE 802.11i IEEE 802.11k IEEE 802.11r IEEE 802.11v
Interoperability	Wi-Fi certified
Frequency Band	802.11b/g/n/ax/be • 2.402 – 2.482 GHz 802.11a/n/ac/ax/be • 4.9 – 4.95 GHz (Japan) • 5.15 – 5.25 GHz • 5.25 – 5.35 GHz • 5.47 – 5.725 GHz • 5.825 – 5.850 GHz • 5.955 – 6.415 GHz • 6.435 – 6.515 GHz • 6.535 – 6.875 GHz • 6.895 – 7.115 GHz

Technical Specifications – Networking and Communications

Data Rates	• 802.11b: 1, 2, 5.5, 11 Mbps • 802.11g: 6, 9, 12, 18, 24, 36, 48, 54 Mbps • 802.11a: 6, 9, 12, 18, 24, 36, 48, 54 Mbps • 802.11n: max 300Mbps • 802.11ac: 1733Mbps • 802.11ax: max 2.4Gbps • 802.11be: max 5.76Gbps
Modulation	Direct Sequence Spread Spectrum OFDM, BPSK, QPSK, CCK, 16-QAM, 64-QAM, 256-QAM, 1024QAM, 4096QAM
Security[2]	• IEEE and WiFi compliant 64 / 128 bit WEP encryption for a/b/g mode only • AES-CCMP: 128 bit in hardware • 802.1x authentication • WPA, WPA2: 802.1x. WPA-PSK, WPA2-PSK, TKIP, and AES. • WPA2 certification • WPA3 certification • IEEE 802.11i • WAPI
Network Architecture Models	Ad-hoc (Peer to Peer) Infrastructure (Access Point Required)
Roaming	IEEE 802.11 compliant roaming between access points
Output Power[3]	• 802.11b, 1Mbps: +17dBm minimum • 802.11g, 6Mpbs: +16dBm minimum • 802.11a, 6Mbps: +17dBm minimum • 802.11n, MCS7(HT20): +14dBm minimum • 802.11n, MCS7(HT40): +13.5dBm minimu • 802.11ac MCS9(VHT20): 13.5dBm minimum • 802.11ac MCS9(VHT40): +13.5dBm minimum • 802.11ac MCS9(VHT80): +12.5dBm minimum • 802.11ac MCS9(VHT160): +10.5dBm minimum • 802.11ax MCS11(HE20)(6GHz): +11.5dBm minimum • 802.11ax MCS11(HE40)(6GHz): +7.5dBm minimum • 802.11ax MCS11(HE80)(6GHz): +7.5dBm minimum • 802.11ax MCS11(HE160)(6GHz): +7.5dBm minimum • 802.11be MCS13(EHT20)(6GHz): 11.5dBm • 802.11be MCS13(EHT40)(6GHz): 7.5dBm • 802.11be MCS13(EHT80)(6GHz): 7.5dBm • 802.11be MCS13(EHT160)(6GHz): 6.5dBm • 802.11be MCS13(EHT320)(6GHz): 4.5dBm
Power Consumption	• Transmit mode 3.1 W • Receive mode 1.8 W • Idle mode (PSP) 180 mW (WLAN Associated) • Idle mode 50 mW (WLAN unassociated) • Connected Standby 10mW • Radio disabled 8 mW
Power Management	ACPI and PCI Express compliant power management 802.11 compliant power saving mode

Technical Specifications – Networking and Communications

Receiver Sensitivity[4]	•802.11b, 1Mbps: -93.5dBm maximum •802.11b, 11Mbps: -85dBm maximum • 802.11a/g, 6Mbps: -90.5dBm maximum • 802.11a/g, 54Mbps: -72.5dBm maximum • 802.11n, MCS0(HT20): -90dBm maximum • 802.11n, MCS7(HT20): -71.5dBm maximum • 802.11n, MCS0(HT40): -88.5dBm maximum • 802.11n, MCS7(HT40): -68.5dBm maximum • 802.11ac, MCS9(VHT20): -88.5dBm maximum • 802.11ac, MCS9(VHT40): -65.5dBm maximum • 802.11ac, MCS9(VHT80): -60.5dBm maximum • 802.11ac, MCS9(VHT160): -58.5dBm maximum • 802.11ax, MCS11(HE20)(6GHz): -59.5dBm maximum • 802.11ax, MCS11(HE40)(6GHz): -56.5dBm maximum • 802.11ax, MCS11(HE80)(6GHz): -53.5dBm maximum • 802.11ax, MCS11(HE160)(6GHz): -51.5dBm maximum • 802.11be, MCS13(EHT20)(6GHz): -55.5dBm maximum • 802.11be, MCS13(EHT40)(6GHz): -53.5dBm maximum • 802.11be, MCS13(EHT80)(6GHz): -51.5dBm maximum • 802.11be, MCS13(EHT160)(6GHz): -48.5dBm maximum • 802.11be, MCS13(EHT320)(6GHz): -45.5dBm maximum
Antenna type	High efficiency antenna with spatial diversity Two embedded tri-band 2.4/5/6 GHz antennas are provided to the card to support WLAN MIMO communications and Bluetooth communications
Form Factor	PCI-Express M.2 MiniCard
Dimensions	1. Type 2230: 2.3 x 22.0 x 30.0 mm 2. Type 1216: 1.67 x 12.0 x 16.0 mm
Weight	1. Type 2230: 2.8g 2. Type 1216: 1.3g
Operating Voltage	3.3v +/- 9%
Temperature	Operating: 14° to 158° F (–10° to 70° C) Non-operating: –40° to 176° F (–40° to 80° C)
Humidity	Operating: 10% to 90% (non-condensing) Non-operating: 5% to 95% (non-condensing)
Altitude	Operating: 0 to 10,000 ft (3,048 m) Non-operating: 0 to 50,000 ft (15,240 m)
LED Activity	LED Amber – Radio OFF; LED OFF – Radio ON
HP Integrated Module with Bluetooth® 4.0/4.1/4.2/5.0/5.1/5.2/5.3/5.4 Wireless Card Technology	
Bluetooth® Specification	4.0/4.1/4.2/5.0/5.1/5.2/5.3/5.4 Wireless Card Compliant
Frequency Band	2402 to 2480 MHz
Number of Available Channels	Legacy: 0~79 (1 MHz/CH) BLE: 0~39 (2 MHz/CH)
Data Rates and Throughput	Legacy: 3 Mbps data rate; throughput up to 2.17 Mbps BLE: 1 Mbps data rate; throughput up to 0.2 Mbps Legacy: Synchronous Connection Oriented links up to 3, 64 kbps, voice channels Legacy: Asynchronous Connection Less links 2178.1 kbps/177.1 kbps asymmetric (3-DH5) or 864 kbps symmetric (3-EV5)
Transmit Power	The Bluetooth component shall operate as a Class I Bluetooth device with a maximum transmit power of +15.5 dBm for BR and +13dBm for EDR.

Technical Specifications – Networking and Communications

Power Consumption	Peak (Tx): 330 mW Peak (Rx): 230 mW Selective Suspend: 17 mW
Bluetooth® Software Supported Link Topology	1.Microsoft Windows Bluetooth Software 2.Linux/Chrome OS Bluetooth Software.
Power Management	ACPI and PCI Express compliant power management 802.11 compliant power saving mode
Certifications	FCC (47 CFR) Part 15C/E, Section 15.247, 15.249, 15.407 ETSI 300 328, ETSI 301 893, ETSI 303 687
Bluetooth® Profiles Supported	Bluetooth 4.1-ESR 5/6/7 Compliance LE Link Layer Ping LE Dual Mode LE Link Layer LE Low Duty Cycle Directed Advertising LE L2CAP Connection Oriented Channels Train Nudging & Interlaced Scan Bluetooth 4.2 ESR08 Compliance LE Secure Connection- Basic/Full LE Privacy 1.2 –Link Layer Privacy LE Privacy 1.2 –Extended Scanner Filter Policies LE Data Packet Length Extension FAX Profile (FAX) Basic Imaging Profile (BIP)2 Headset Profile (HSP) Hands Free Profile (HFP) Advanced Audio Distribution Profile (A2DP) Bluetooth 5.2 ESR9/10 Compliance LE Advertisement Extensions Channel Selection Algo Limited High Duty Cycle Non-Connectable Advertising 2Mbps LE LE Long Range Bluetooth 5.3 Host to Controller Encryption Key Control Enahancements Compliance to the latest Errata Section 12.3 of Bluetooth 5.3 specification

1. Wi-Fi 7 requires a Wi-Fi 7 router, sold separately, to function in the 6GHz band. Availability of public wireless access points limited. Wi-Fi 7 is backwards compatible with prior 802.11 specs. And available in countries where Wi-Fi 7 is supported. Wi-Fi 7 is designed to support gigabit data rate when transferring files between two devices connected to the same router. Requires a wireless router, sold separately, that supports 80MHz and higher channels.
2. Check latest software/driver release for updates on supported security features.
3. The FCC has declared as of September 1, 2014 products that utilize passive scanning on channel 12/13 and are capable of transmitting must fully comply with requirements of 15.247 or otherwise disable those channels.
4. Receiver sensitivity is measured at a packet error rate of 8% for 802.11b (CKK modulation) and a packet error rate of 10% for 802.11a/g (OFDM modulation).

Technical Specifications – Networking and Communications

Intel BE200 Wi-Fi 7 +Bluetooth® 5.4 Wireless Card M.2 320MHz PCIe World-wide WLAN non-vPro[1]	
Wireless LAN Standards	IEEE 802.11a IEEE 802.11b IEEE 802.11g IEEE 802.11n IEEE 802.11ac IEEE 802.11ax IEEE 802.11be IEEE 802.11d IEEE 802.11e IEEE 802.11h IEEE 802.11i IEEE 802.11k IEEE 802.11r IEEE 802.11v
Interoperability	Wi-Fi certified
Frequency Band	802.11b/g/n/ax/be • 2.402 – 2.482 GHz 802.11a/n/ac/ax/be • 4.9 – 4.95 GHz (Japan) • 5.15 – 5.25 GHz • 5.25 – 5.35 GHz • 5.47 – 5.725 GHz • 5.825 – 5.850 GHz • 5.955 – 6.415 GHz • 6.435 – 6.515 GHz • 6.535 – 6.875 GHz • 6.895 – 7.115 GHz
Data Rates	• 802.11b: 1, 2, 5.5, 11 Mbps • 802.11g: 6, 9, 12, 18, 24, 36, 48, 54 Mbps • 802.11a: 6, 9, 12, 18, 24, 36, 48, 54 Mbps • 802.11n: max 300Mbps • 802.11ac: 1733Mbps • 802.11ax: max 2.4Gbps • 802.11be: max 5.76Gbps
Modulation	Direct Sequence Spread Spectrum OFDM, BPSK, QPSK, CCK, 16-QAM, 64-QAM, 256-QAM, 1024QAM, 4096QAM
Security[2]	• IEEE and WiFi compliant 64 / 128 bit WEP encryption for a/b/g mode only • AES-CCMP: 128 bitIn hardware • 802.1x authentication • WPA, WPA2: 802.1x. WPA-PSK, WPA2-PSK, TKIP, and AES. • WPA2 certification • WPA3 certification • IEEE 802.11i • WAPI
Network Architecture Models	Ad-hoc (Peer to Peer) Infrastructure (Access Point Required)
Roaming	IEEE 802.11 compliant roaming between access points

Technical Specifications – Networking and Communications

Output Power[3]	• 802.11b, 1Mbps: +17dBm minimum • 802.11g, 6Mpbs: +16dBm minimum • 802.11a, 6Mbps: +17dBm minimum • 802.11n, MCS7(HT20): +14dBm minimum • 802.11n, MCS7(HT40): +13.5dBm minimu • 802.11ac MCS9(VHT20): 13.5dBm minimum • 802.11ac MCS9(VHT40): +13.5dBm minimum • 802.11ac MCS9(VHT80): +12.5dBm minimum • 802.11ac MCS9(VHT160): +10.5dBm minimum • 802.11ax MCS11(HE20)(6GHz): +11.5dBm minimum • 802.11ax MCS11(HE40)(6GHz): +7.5dBm minimum • 802.11ax MCS11(HE80)(6GHz): +7.5dBm minimum • 802.11ax MCS11(HE160)(6GHz): +7.5dBm minimum • 802.11be MCS13(EHT20)(6GHz): 11.5dBm • 802.11be MCS13(EHT40)(6GHz): 7.5dBm • 802.11be MCS13(EHT80)(6GHz): 7.5dBm • 802.11be MCS13(EHT160)(6GHz): 6.5dBm • 802.11be MCS13(EHT320)(6GHz): 4.5dBm
Power Consumption	• Transmit mode 3.1 W • Receive mode 1.8 W • Idle mode (PSP) 180 mW (WLAN Associated) • Idle mode 50 mW (WLAN unassociated) • Connected Standby 10mW • Radio disabled 8 mW
Power Management	ACPI and PCI Express compliant power management 802.11 compliant power saving mode
Receiver Sensitivity[4]	•802.11b, 1Mbps: -93.5dBm maximum •802.11b, 11Mbps: -85dBm maximum • 802.11a/g, 6Mbps: -90.5dBm maximum • 802.11a/g, 54Mbps: -72.5dBm maximum • 802.11n, MCS0(HT20): -90dBm maximum • 802.11n, MCS7(HT20): -71.5dBm maximum • 802.11n, MCS0(HT40): -88.5dBm maximum • 802.11n, MCS7(HT40): -68.5dBm maximum • 802.11ac, MCS9(VHT20): -88.5dBm maximum • 802.11ac, MCS9(VHT40): -65.5dBm maximum • 802.11ac, MCS9(VHT80): -60.5dBm maximum • 802.11ac, MCS9(VHT160): -58.5dBm maximum • 802.11ax, MCS11(HE20)(6GHz): -59.5dBm maximum • 802.11ax, MCS11(HE40)(6GHz): -56.5dBm maximum • 802.11ax, MCS11(HE80)(6GHz): -53.5dBm maximum • 802.11ax, MCS11(HE160)(6GHz): -51.5dBm maximum • 802.11be, MCS13(EHT20)(6GHz): -55.5dBm maximum • 802.11be, MCS13(EHT40)(6GHz): -53.5dBm maximum • 802.11be, MCS13(EHT80)(6GHz): -51.5dBm maximum • 802.11be, MCS13(EHT160)(6GHz): -48.5dBm maximum • 802.11be, MCS13(EHT320)(6GHz): -45.5dBm maximum
Antenna type	High efficiency antenna with spatial diversity Two embedded tri-band 2.4/5/6 GHz antennas are provided to the card to support WLAN MIMO communications and Bluetooth communications
Form Factor	PCI-Express M.2 MiniCard
Dimensions	1. Type 2230: 2.3 x 22.0 x 30.0 mm 2. Type 1216: 1.67 x 12.0 x 16.0 mm

Technical Specifications – Networking and Communications

Weight	1. Type 2230: 2.8g 2. Type 1216: 1.3g
Operating Voltage	3.3v +/- 9%
Temperature	Operating: 14° to 158° F (–10° to 70° C) Non-operating: –40° to 176° F (–40° to 80° C)
Humidity	Operating: 10% to 90% (non-condensing) Non-operating: 5% to 95% (non-condensing)
Altitude	Operating: 0 to 10,000 ft (3,048 m) Non-operating: 0 to 50,000 ft (15,240 m)
LED Activity	LED Amber – Radio OFF; LED OFF – Radio ON
HP Integrated Module with Bluetooth® 4.0/4.1/4.2/5.0/5.1/5.2/5.3/5.4 Wireless Card Technology	
Bluetooth® Specification	4.0/4.1/4.2/5.0/5.1/5.2/5.3/5.4 Wireless Card Compliant
Frequency Band	2402 to 2480 MHz
Number of Available Channels	Legacy: 0~79 (1 MHz/CH) BLE: 0~39 (2 MHz/CH)
Data Rates and Throughput	Legacy: 3 Mbps data rate; throughput up to 2.17 Mbps BLE: 1 Mbps data rate; throughput up to 0.2 Mbps Legacy: Synchronous Connection Oriented links up to 3, 64 kbps, voice channels Legacy: Asynchronous Connection Less links 2178.1 kbps/177.1 kbps asymmetric (3-DH5) or 864 kbps symmetric (3-EV5)
Transmit Power	The Bluetooth component shall operate as a ClassI Bluetooth device with a maximum transmit power of +15.5 dBm for BR and +13dBm for EDR.
Power Consumption	Peak (Tx): 330 mW Peak (Rx): 230 mW Selective Suspend: 17 mW
Bluetooth® Software Supported Link Topology	1. Microsoft Windows Bluetooth Software 2. Linux/Chrome OS Bluetooth Software.
Power Management	ACPI and PCI Express compliant power management 802.11 compliant power saving mode
Certifications	FCC (47 CFR) Part 15C/E, Section 15.247, 15.249, 15.407 ETSI 300 328, ETSI 301 893, ETSI 303 687

Technical Specifications – Networking and Communications

Bluetooth® Profiles Supported	Bluetooth 4.1-ESR 5/6/7 Compliance LE Link Layer Ping LE Dual Mode LE Link Layer LE Low Duty Cycle Directed Advertising LE L2CAP Connection Oriented Channels rain Nudging &Interlaced Scan Bluetooth 4.2 ESR08 Compliance E Secure Connection- Basic/Full E Privacy 1.2 –Link Layer Privacy LE Privacy 1.2 –Extended Scanner Filter Policies LE Data Packet Length Extension FAX Profile (FAX) Basic Imaging Profile (BIP)2 Headset Profile (HSP) Hands Free Profile (HFP) Advanced Audio Distribution Profile (A2DP) Bluetooth 5.2 ESR9/10 Compliance LE Advertisement Extensions Channel Selection Algo Limited High Duty Cycle Non-Connectable Advertising Mbps LE LE Long Range Bluetooth 5.3 Host to Controller Encryption Key Control Enahancements Compliance to the latest Errata Section 12.3 of Bluetooth 5.3 specification

1. Wi-Fi 7 requires a Wi-Fi 7 router, sold separately, to function in the 6GHz band. Availability of public wireless access points limited. Wi-Fi 7Is backwards compatible with prior 802.11 specs. And available in countries where Wi-Fi 7Is supported. Wi-Fi 7Is designed to support gigabit data rate when transferring files between two devices connected to the same router. Requires a wireless router, sold separately, that supports 80MHz and higher channels.
2. Check latest software/driver release for updates on supported security features.
3. The FCC has declared as of September 1, 2014 products that utilize passive scanning on channel 12/13 and are capable of transmitting must fully comply with requirements of 15.247 or otherwise disable those channels.
4. Receiver sensitivity is measured at a packet error rate of 8% for 802.11b (CKK modulation) and a packet error rate of 10% for 802.11a/g (OFDM modulation).

Realtek RTL8852CE 802.11ax 2x2 Wi-Fi 6E + Bluetooth® 5.3 Wireless Card[1]
(802.11ax 2x2, supporting gigabit data rate)

Wireless LAN Standards	IEEE 802.11a IEEE 802.11b IEEE 802.11g IEEE 802.11n IEEE 802.11ac IEEE 802.11ax IEEE 802.11d IEEE 802.11e IEEE 802.11h IEEE 802.11i IEEE 802.11k
Interoperability	Wi-Fi certified
Frequency Band	802.11b/g/n/ax • 2.402 – 2.482 GHz 802.11a/n/ac/ax • 5.15 – 5.25 GHz • 5.25 – 5.35 GHz • 5.47 – 5.725 GHz • 5.825 – 5.850 GHz • 5.955 – 6.415 GHz • 6.435 – 6.515 GHz • 6.535 – 6.875 GHz • 6.895 – 7.115 GHz
Data Rates	• 802.11b: 1, 2, 5.5, 11 Mbps • 802.11g: 6, 9, 12, 18, 24, 36, 48, 54 Mbps • 802.11a: 6, 9, 12, 18, 24, 36, 48, 54 Mbps • 802.11n: MCS 0 ~ MCS 15, (20MHz, and 40MHz) • 802.11ac: MCS0 ~ MCS9, (20MHz, 40MHz, ,80MHz & 160MHz) • 802.11ax: MCS0 ~ MCS11, (20MHz, 40MHz, ,80MHz & 160MHz)
Modulation	Direct Sequence Spread Spectrum OFDM, BPSK, QPSK, CCK, 16-QAM, 64-QAM, 256-QAM, 1024QAM
Security[2]	•IEEE and WiFi certified 64 / 128 bit WEP encryption for a/b/g mode only • AES-CCMP: 128 bit in hardware • 802.1x authentication • WPA, WPA2: 802.1x. WPA-PSK, WPA2-PSK, TKIP, and AES. • WPA2 certification • WPA3 (personal) certification • IEEE 802.11i • WAPI • EAP
Network Architecture Models	Ad-hoc (Peer to Peer) Infrastructure (Access Point Required)
Roaming	IEEE 802.11 compliant roaming between access points
Output Power[3]	• 802.11b: +17dBm minimum • 802.11g: +16dBm minimum • 802.11a: +17dBm minimum

Technical Specifications – Networking and Communications

	• 802.11n HT20(2.4GHz): +14dBm minimum • 802.11n HT40(2.4GHz): +13dBm minimum • 802.11n HT20(5GHz): +14dBm minimum • 802.11n HT40(5GHz): +13dBm minimum • 802.11ac VHT80(5GHz): +10dBm minimum • 802.11ac VHT160(5GHz): +10dBm minimum • 802.11ax HE40(2.4GHz): +12dBm minimum • 802.11ax HE80(5GHz): +10dBm minimum • 802.11ax HE160(5GHz): +10dBm minimum • 802.11ax HE80(6GHz): +10dBm minimum • 802.11ax HE160(6GHz): +10dBm minimum
Power Consumption	•Transmit mode:2.5 W •Receive mode:2 W •Idle mode (PSP) 180 mW (WLAN Associated) •Idle mode: 50 mW (WLAN unassociated) •Connected Standby/Modern Standby: 10mW •Radio disabled: 8 mW
Power Management	ACPI and PCI Express compliant power management 802.11 compliant power saving mode
Receiver Sensitivity[4]	802.11b, 1Mbps: -93.5dBm maximum 802.11b, 11Mbps: -84dBm maximum 802.11a/g, 6Mbps: -86dBm maximum 802.11a/g, 54Mbps: -72dBm maximum 802.11n, MCS07: -67dBm maximum 802.11n, MCS15: -64dBm maximum 802.11ac, MCS0(VHT80): -84dBm maximum 802.11ac, MCS9(VHT80): -59dBm maximum 802.11ac, MCS9(VHT160): -58.5dBm maximum •802.11ax, MCS11(HE40): -57dBm maximum •802.11ax, MCS11(HE80): -54dBm maximum •802.11ax, MCS11(HE160): -53.5dBm maximum
Antenna type	High efficiency antenna with spatial diversity Two embedded tri-band 2.4/5/6 GHz antennas are provided to the card to support WLAN MIMO communications and Bluetooth communications
Form Factor	PCI-Express M.2 MiniCard
Dimensions	1. Type 2230: 2.3 x 22.0 x 30.0 mm
Weight	1. Type 2230: 2.8g
Operating Voltage	3.3v +/- 9%
Temperature	Operating: 14° to 158° F (–10° to 70° C) Non-operating: –40° to 176° F (–40° to 80° C)
Humidity	Operating: 10% to 60% (non-condensing) Non-operating: 5% to 95% (non-condensing)
Altitude	Operating: 0 to 10,000 ft (3,048 m) Non-operating: 0 to 50,000 ft (15,240 m)
LED Activity	N/A

Technical Specifications – Networking and Communications

HP Integrated Module with Bluetooth® 4.0/4.1/4.2/5.0/5.1/5.2/5.3 Wireless Card Technology	
Bluetooth Specification	4.0/4.1/4.2/5.0/5.1/5.2/5.3 Wireless Card Compliant
Frequency Band	2402 to 2480 MHz
Number of Available Channels	Legacy: 0~79 (1 MHz/CH) BLE: 0~39 (2 MHz/CH)
Data Rates and Throughput	Legacy: 3 Mbps data rate; throughput up to 2.17 Mbps BLE: 1 Mbps data rate; throughput up to 0.2 Mbps Legacy: Synchronous Connection Oriented links up to 3, 64 kbps, voice channels Legacy: Asynchronous Connection Less links 2178.1 kbps/177.1 kbps asymmetric (3-DH5) or 864 kbps symmetric (3-EV5)
Transmit Power	The Bluetooth component shall operate as a Class II Bluetooth device with a maximum transmit power of + 4 dBm for BR and EDR.
Power Consumption	Peak (Tx): 330 mW Peak (Rx): 230 mW Selective Suspend: 17 mW
Bluetooth® Software Supported Link Topology	Microsoft Windows Bluetooth Software
Power Management	Microsoft Windows ACPI, and USB Bus Support
Certifications	FCC (47 CFR) Part 15C/E, Section 15.247, 15.249, 15.407 ETSI 300 328, ETSI 301 893, ETSI 303 687
Bluetooth® Profiles Supported	Bluetooth 4.1-ESR 5/6/7 Compliance LE Link Layer Ping LE Dual Mode LE Link Layer LE Low Duty Cycle Directed Advertising LE L2CAP Connection Oriented Channels Train Nudging & Interlaced Scan Bluetooth 4.2 ESR08 Compliance LE Secure Connection- Basic/Full LE Privacy 1.2 –Link Layer Privacy LE Privacy 1.2 –Extended Scanner Filter Policies LE Data Packet Length Extension FAX Profile (FAX) Basic Imaging Profile (BIP)2 Headset Profile (HSP) Hands Free Profile (HFP) Advanced Audio Distribution Profile (A2DP) Bluetooth 5.2 ESR9/10 Compliance LE Advertisement Extensions Channel Selection Algo Limited High Duty Cycle Non-Connectable Advertising 2Mbps LE LE Long Range Windows Bluetooth profiles support Bluetooth 5.3 Periodic Advertisement interval Encryption key size control enhancements

1. Wi-Fi 6E requires a Wi-Fi 6E router, sold separately, to function in the 6GHz band. Availability of public wireless access points limited. Wi-Fi 6E is backwards compatible with prior 802.11 specs. And available in countries where Wi-Fi 6E is supported. Wi-Fi 6E is designed to support gigabit data rate when transferring files between two devices connected to the same router. Requires a wireless router, sold separately, that supports 80MHz and higher channels.
2. Check latest software/driver release for updates on supported security features.
3. The FCC has declared as of September 1, 2014 products that utilize passive scanning on channel 12/13 and are capable of transmitting must fully comply with requirements of 15.247 or otherwise disable those channels.
4. Receiver sensitivity is measured at a packet error rate of 8% for 802.11b (CKK modulation) and a packet error rate of 10% for 802.11a/g (OFDM modulation).

HP Flex 1GbE Fiber LC Single Port	
Connector	Fiber
Cabling	I GbE over Category OM1 (or better) up to 100m
Controller	Microchip LAN7801
Data Rates Supported	100/1000 Mbps
Compliance	IEE 802.1q priority enconding/tagging (QoS, CoS) IEE 802.1q VLAN tagging IEE 802.3x flow control
Bus Architecture	USB
Power requirement	Requires 3.3V (Integrated regulators for code Vdc)
Boot ROM support	Yes
Network transfer mode	Full-duplex; Half duplex
Network transfer rate	100BASE-X (Half-duplex) 100Mbps 1000BASE-X (Half-duplex) 1000Mbps 1000BASE-X (Full-duplex) 2000Mbps
Operating temperature	32° to 95° F (0° to 35°C)
calvin	1.5 x 1.7 x 0.75 In (3.84 x 4.3 x 1.9 cm)
Operating System Driver Support	Windows 11 64-Bit Linux®

I/O DEVICES

HP USB Business Slim v2 Wired SmartCard CCID Keyboard		
Physical Characteristics	Keys	104, 105, 107, 109 layout (depending upon country)
	Dimensions (LxWxH)	17.34 x 5.68 x 0.78 in (440.6 x 144.5 x 1.98 cm)
	Weight	1.32 lb (598g)
Electrical	Operating voltage	5 VDC, +/-5%
	Power consumption	100mA (All LED on)
	System Interface	USB Type A plug connector
	ESD	Contact Discharge: 8 KV Air Discharge: 12.5 KV
	EMI - RFI	Conforms to FCC rules for a Class B computing device
Mechanical	Keycaps	Low-profile design
	Switch actuation	60±10g nominal peak force with tactile feedback
	Switch life	10 million keystrokes (Life tester)
	Switch type	Contamination-resistant switch membrane
	Key-leveling mechanisms	For all double-wide and greater-length keys
	Cable length	6 ft (1.8 m)
Environmental	Acoustics	43-dBA maximum sound pressure level
	Operating temperature	50° to 122° F (10° to 50° C)
	Non-operating temperature	-22° to 140° F (-30° to 60° C)
	Operating humidity	10% to 90% (non-condensing at ambient)
	Non-operating humidity	20% to 80% (non-condensing at ambient)
	Operating shock	40 g, six surfaces
	Non-operating shock	80 g, six surfaces
	Operating vibration	2-g peak acceleration
	Non-operating vibration	4-g peak acceleration
	Drop (out of box)	26 in (66 cm) on carpet, six-drop sequence
	Drop (in box)	30 in (76.2 cm) on concrete, 16-drop sequence
SmartCard Function	Support	All ISO 7816 smart cards Support Extended APDU
	Interface	Reads from and writes to all ISO7816-1, 2, 3, 4 memory and microprocessor smart cards (T=0, T=1)
	Chipset	IDENTIV CLOUD 2190 F
	Standard APIs supported	PC/SC, EMV2000, CT-API
	Power	USB Port
		Short circuit detection (protects smart card and reader)
		Power supply compliant with ISO7816 and EMV (5V, 60 mA)
		Supports 3-V and 5-V cards

	Power consumption	100-mA maximum draw	
	Communication	From card	9600 bps to 330,000 bps
		From computer	12 Mbps (USB transfer speed)
	Landing mechanism	Contact device	Friction contact
		Card insertions rating	Up to 100,000 insertion cycles
	Interface modes	CCID protocol	
	Reader performance interface	USB connection	
	Electro-magnetic standards	Europe	2004/108/EC
		USA	USAFCC part 15
Approvals	CE Marking, TUV, EAC, FCC, cULus/CSAus, ICES, RCM, VCCI, KCC, BSMI		
Ergonomic compliance	ISO 9241-4, TUVGS		

HP 125 v2 AntiMicrobial Wired Keyboard (China only)		
Physical Characteristics	Keys	104/105/107/109 layout (depending upon country)
	Dimensions (LxWxH)	436 x 138 x20.7 mm
	Weight	471g
Electrical	Operating voltage	5V +- 5%
	Power consumption	50mA
	System Interface	USB Type A plug connector
	ESD	Contact Discharge: 8 KV Air Discharge: 12.5 KV
	EMI - RFI	Conforms to FCC rules for a Class B computing device
Mechanical	Keycaps	Low-profile design
	Switch actuation	55±10g nominal peak force with tactile feedback
	Switch life	10 million keystrokes (Life tester)
	Switch type	Contamination-resistant switch membrane
	Key-leveling mechanisms	For all double-wide and greater-length keys
	Cable length	1.8 m
Environmental	Acoustics	43-dBA maximum sound pressure level
	Operating temperature	50° to 122° F (10° to 50° C)
	Non-operating temperature	-4° to 149° F (-20° to 65° C)
	Operating humidity	10% to 95% (non-condensing at ambient)
	Non-operating humidity	0% to 95% (non-condensing at ambient)
	Operating shock	40 g, six surfaces
	Non-operating shock	80 g, six surfaces
	Operating vibration	2-g peak acceleration
	Non-operating vibration	4-g peak acceleration
	Drop (out of box)	26 in (66 cm) on carpet, six-drop sequence

Technical Specifications – Input/Output Devices

	Drop (in box)	30 in (76.2 cm) on concrete, 16-drop sequence
Approvals	UL, cUL, FCC, CE, TUV GS, VCCI, BSMI, RCM, KCC, USB-IF, WHQL, EN/IEC 60601-1	
Ergonomic compliance	ANSI HFS 100, ISO 9241-4, and TUVGS	

Technical Specifications – Input/Output Devices

HP 175 Wired Keyboard		
Physical Characteristics	Keys	110keys (US);111(UK);113(JP, BR)
	Dimensions (LxWxH)	428.83x117.37x19.1 (mm) ;16.88 × 4.62 × 0.75 (in)
	Weight	435 (g) ;0.96 (lb)
Electrical	Operating voltage	4.75~5.25V
	Power consumption	100mA
	System Interface	USB
	ESD	Contact Discharge: 8 KV Air Discharge: 15 KV
	Cable length	6 ft (1.8 M)
	EMI - RFI	Conforms to FCC rules for a Class B computing device
Mechanical	Key Structure (Switch type and feeling) (Plunger)	Plunger, Key travel: 2.5mm +/-0.2mm at 120gf, low profile key travel
	Key actuation	60±8g nominal peak force with tactile feedback
	Key life	10 million keystrokes (Life tester)
Environmental	Operating temperature	50° to 122° F (10° to 50° C)
	Non-operating temperature	-32° to 140° F (-40° to 60° C)
	Operating humidity	10% to 90% (non-condensing at ambient)
	Non-operating humidity	20% to 80% (non-condensing at ambient)
	Drop (out of box)	6 faces, 76cm, rigid surface
	Drop (in box)	6 faces, 1 corner and 3 edges on rigid surface, drop Height: 91cm
Approvals	UL, FCC, CE Mark, TUV GS, VCCI, BSMI, RCM, KCC, EAC, BIS	

HP 175 Antimicrobial Wired Keyboard		
Physical Characteristics	Keys	110 keys (US); 111 (UK); 113 (JP, BR)
	Dimensions (LxWxH)	428.83 x 117.37 x 19.1 mm; 16.88 x 4.62 x 0.75 in
	Weight	435 g; 0.96 lb
Electrical	Operating voltage	4.75~5.25V
	Power consumption	100mA
	System Interface	USB
	ESD	Contact Discharge: 8 KV Air Discharge: 15 KV
	Cable length	6 ft (1.8 M)
	EMI - RFI	Conforms to FCC rules for a Class B computing device
Mechanical	Key Structure (Switch type and feeling) (Plunger)	Plunger, Key travel: 2.5mm +/-0.2mm at 120gf, low profile key travel
	Key actuation	60±8g nominal peak force with tactile feedback
	Key life	10 million keystrokes (Life tester)
Environmental	Operating temperature	50° to 122° F (10° to 50° C)
	Non-operating temperature	-32° to 140° F (-40° to 60° C)
	Operating humidity	10% to 90% (non-condensing at ambient)
	Non-operating humidity	20% to 80% (non-condensing at ambient)
	Drop (out of box)	6 faces, 76cm, rigid surface
	Drop (in box)	6 faces, 1 corner and 3 edges on rigid surface, drop Height: 91cm
Approvals	UL, FCC, CE Mark, TUV GS, VCCI, BSMI, RCM, KCC, EAC, BIS	

Technical Specifications – Input/Output Devices

HP 275 Wireless Keyboard		
Physical Characteristics	Keys	107keys (US); 108keys (UK); 110 keys (JP, BR)
	Dimensions (LxWxH)	428.83 x 117.37 x 19.1 (mm); 16.88 x 4.62 x 0.75 (in)
	Weight	416 (g); 0.92 (lb)
Electrical	Operating voltage	2.2V~3.3V(BATTERY)
	Power consumption	30mA
	System Interface	2.4GHz Wireless
	ESD	Contact Discharge: 8 KV Air Discharge: 15 KV
	EMI - RFI	Conforms to FCC rules for a Class B computing device
Mechanical	Key Structure (Switch type and feeling) (Plunger)	Plunger, Key travel: 2.5mm +/-0.2mm at 120gf, low profile key travel
	Key actuation	60±8g nominal peak force with tactile feedback
	Key life	10 million keystrokes (Life tester)
Environmental	Operating temperature	50° to 122° F (10° to 50° C)
	Non-operating temperature	-32° to 140° F (-40° to 60° C)
	Operating humidity	10% to 90% (non-condensing at ambient)
	Non-operating humidity	20% to 80% (non-condensing at ambient)
	Drop (out of box)	6 faces, 76cm, rigid surface
	Drop (in box)	6 faces, 1 corner and 3 edges on rigid surface, drop Height: 91cm
Approvals	CB; FCC; IC; UL; ENCOM; ANATEL; SUBTEL; RCM; WPC; BIS; CONATEL; TRA; CE; TUV GS; ICASA; SRRC; DJID; TELEC; VCCI; KCC; SIRIM; NTC; IMDA; NCC; BSMI; NBTC	

HP 320K v2 Wired Desktop Keyboard		
Physical Characteristics	Keys	104, 105, 107,109 layouts
	Dimensions(LxWxH)	18.86*4.55*0.66 in (426.2 x 110.9 x 16.7 mm)
	Weight	1.00 lb(452g)
Electrical	Operating voltage	5 VDC, +/-5%
	Power consumption	50 mA Max (All LED on)
	System Interface	USB Port
	ESD	Contact Discharge: 8 KV Air Discharge: 15 KV (Class B)
	EMI - RFI	European Standard EN 55022: 2006+A1: 2007, Class B. FCC/CFR 47: Part 15 Class B
Mechanical	Keycaps	2.0mm +/-0.2mm at 120gf Key travel
Environmental	Operating temperature	10° C to 90° C
	Non-operating temperature	-30° C to 95° C
	Operating humidity	N/A
	Non-operating humidity	10% to 90% (non-condensing at ambient)
	Operating shock	N/A

	Non-operating shock	i. Half-Sine Shock – End-Use Handling, Non-Operational Sample size: 5pcs. Condition: Sample power off. Axis: X, Y, Z axis (all 6 faces) – sample normal mode of operation. Number of shocks: 1 shock/face. Pulse duration: < 3 ms Velocity change: 50lps (inch-per-second)- 65lps desired. ii. Trapezoidal Shock- Transportation Environment, Non-Operational Sample size: 5pcs. Condition: Sample power off. Orientation: All six faces: Front, Rear, Left, Right, Bottom, and Top. Configuration: As intended for shipment Number of shocks: 1 shock/face. Minimum faired acceleration: 30G's. Test also at 40 and 50G's to find margin. Velocity change: 266lps (inch-per-second) for product mass (m) 20<m<40lb		
	Operating vibration	**Frequency (Hz)**	**Slope (dB/oct)**	**PSD (g^2/Hz)**
		5-350	0	0.0001
		350-500	-6	-
		500	-	0.00005
		(~0.21G_{nms})		
		Total Test time: 10 minutes		
	Non-operating vibration	**Frequency (Hz)**	**Slope (dB/oct)**	**PSD (g^2/Hz)**
		5.100	0	0.015
		100-137	-6	-
		137-350	0	0.008
		350-500	-6	-
		500	-	0.0039
	Drop (out of box)	76cm on carpet, six-drop sequence		
	Drop (in box)	10 times drop including 6 faces, one corner and 3 edges on rigid surface. Drop Height: 91cm		
Approvals	CB, CE, FCC, ICES, EAC, NOM-NYCE SCT, RCM, BIS, VCCI, KC, BSMI			
Ergonomic compliance	TUVGS			

Technical Specifications – Input/Output Devices

HP 725 Multi-Device Rechargeable Wireless Keyboard		
Physical Characteristics	Keys	US-109 Keys POD-110 Keys JP-114 Keys LA-110 Keys
	Dimensions (LxWxH)	420.47 x 120.7 x 17.66(mm); 16.56 x 4.75 x 0.7(in)
	Weight	1.1lb; 499g
Electrical	Operating voltage	2.5V~3.8V
	Power consumption	2.4G Active=0.833mA Idle=0.065mA Sleep=0.03mA Power off=0.006mA BLE Active=0.414mA Idle=0.048 Sleep=0.03mA Power off=0.006mA
	System Interface	2.4GHz Wireless +Bluetooth 5.3
	ESD	4kV, Contact Discharge 8kV, Air Discharge
	EMI - RFI	-3dB
Mechanical	Key Structure (Switch type and feeling) (Plunger, Scissor, Mechanical)	Scissor, 2.0mm ± 0.3mm low profile key travel
	Key actuation	Contact Point: 1.1±0.4mm
	Key life	10 million keystrokes (Life tester)
	Key structure type	Scissor
	Key-leveling mechanisms	balance bar
Environmental	Operating temperature	-29°C ~ 60°C
	Non-operating temperature	-20°C ~ 65°C
	Operating humidity	N/A
	Non-operating humidity	0-95%RH
	Operating shock	40G, 2ms, 1 impact on the ± X, ± Y, and + Z axes, with a total of 6 impacts
	Non-operating shock	240G, 2ms, 1 impact on the ± X, ± Y, and + Z axes, with a total of 6 impacts
	Operating vibration	N/A
	Non-operating vibration	Frequency: 5-55-5 (Hz), Amplitude: 2mm, Vibration direction: X, Y, Z, three axes in total, Cycle time: 3 minutes/CYCLE, Number of cycles: 10 times, Test time: 30 minutes/axis, total 90 minutes
	Drop (out of box)	6 faces & 4 corners, 76cm
	Drop (in box)	1 corner, 3 edge, 6 flat
Approvals	CB; FCC; IC; RCM; WPC; NTC; IMDA; BSMI; NCC; SRRC; SIRIM; TRA; EAC; ICASA; UKCA; KCC; TUV; RATEL; IFETEL; BIS; MOICT; iCTqatar; RoHS; Subtel; NKRZI	

Technical Specifications – Input/Output Devices

HP Wired Desktop 320M Mouse		
Physical Characteristics	Keys	Left/right key
	Dimensions (LxWxH)	4.09 x2.50 x 1.40 in (103.8x 63.4 x 35.5 mm)
	Weight	0.16 lb (72g)
Electrical	Operating voltage	5 VDC, +/-0.25V
	Power consumption	100 mA Max
	System Interface	USB Port
	ESD	Contact Discharge: 8 KV Air Discharge: 15 KV (Class B)
	EMI - RFI	European Standard EN 55022: 2006+A1: 2007, Class B. FCC/CFR 47: Part 15 Class B
Mechanical	Keycaps	0.3mm key travel
	Key actuation	75±20g
	Key life	1million cycles
	Key structure type	Tact Switch
	Key-leveling mechanisms	N/A
Environmental	Operating temperature	10° to 90° C
	Non-operating temperature	-30° C to 95° C
	Operating humidity	N/A
	Non-operating humidity	10% to 90% (non-condensing at ambient)
	Operating shock	N/A
	Non-operating shock	i. Half-Sine Shock – End-Use Handling, Non-Operational Sample size: 5pcs. Condition: Sample power off. Axis: X, Y, Z axis (all 6 faces) – sample normal mode of operation. Number of shocks: 1 shock/face. Pulse duration: < 3 ms Velocity change: 50lps (inch-per-second)- 65lps desired. ii. Trapezoidal Shock- Transportation Environment, Non-Operational Sample size: 5pcs. Condition: Sample power off. Orientation: All six faces: Front, Rear, Left, Right, Bottom, and Top. Configuration: As intended for shipment Number of shocks: 1 shock/face. Minimum faired acceleration: 30G's. Test also at 40 and 50G's to find margin. Velocity change: 266lps (inch-per-second) for product mass (m) 20<m<40lb

	Operating vibration	**Frequency (Hz)**	**Slope (dB/oct)**	**PSD (g^2/Hz)**
		5-350	0	0.0001
		350-500	-6	-
		500	-	0.00005
		(~0.21G_{nms})		
		Total Test time: 10 minutes		
	Non-operating vibration	**Frequency (Hz)**	**Slope (dB/oct)**	**PSD (g^2/Hz)**
		5.100	0	0.015
		100-137	-6	-
		137-350	0	0.008
		350-500	-6	-
		500	-	0.0039
	Drop (out of box)	76cm on carpet, six-drop sequence		
	Drop (in box)	N/A		
Approvals	CB, CE, FCC, cULus, ICES, EAC, NOM-NYCE SCT, RCM, VCCI, KC, BSMI			
Ergonomic compliance	TUVGS			

HP 375 Secure Smartcard USB Keyboard		
Physical Characteristics	Keys	107, 108, 110, 111 layout (depending upon country)
	Dimensions (LxWxH)	16.88 x 4.61 x 0.75 in (428.8 x 117.1 x 19 mm)
	Weight	1.02lb (462g)
Electrical	Operating voltage	5 VDC, +/-5%
	Power consumption	100mA (All LED on)
	System Interface	USB Type A plug connector
	ESD	Contact Discharge: 8 KV Air Discharge: 15 KV
	EMI - RFI	Conforms to FCC rules for a Class B computing device
Mechanical	Keycaps	Low-profile design
	Switch actuation	60±10g nominal peak force with tactile feedback
	Switch life	10 million keystrokes (Life tester)
	Switch type	Contamination-resistant switch membrane
	Key-leveling mechanisms	For all double-wide and greater-length keys
	Cable length	6 ft (1.8 m)
Environmental	Acoustics	Regular Key: < 43 dBA; Space bar: < 45 dBA
	Operating temperature	50° to 104° F (10° to 40° C)
	Non-operating temperature	-22° to 140° F (-30° to 60° C)
	Operating humidity	10% to 90% (non-condensing at ambient)

Technical Specifications – Input/Output Devices

	Non-operating humidity	20% to 80% (non-condensing at ambient)	
	Operating shock	40 g, six surfaces	
	Non-operating shock	80 g, six surfaces	
	Operating vibration	2-g peak acceleration	
	Non-operating vibration	4-g peak acceleration	
	Drop (out of box)	26 in (66 cm) on carpet, six-drop sequence	
	Drop (in box)	30 in (76.2 cm) on concrete, 16-drop sequence	
Smartcard reader	Support	All ISO 7816 smart cards Support Extended APDU	
	Interface	Fully compliant with EMV L1, ISO 7816-1,2,3,4, memory cards read/write, Synchronous/Asynchronous Protocols T=0 and T=1. Programmable smart card clock from 1MHz to 12MHz.	
	Chipset	Hirsch CLOUD 2190F	
	Standard API's supported	PC/SC, EMV2000, CT-API	
	Power	USB bus Support step up/down DCDC converter Class A: 5V 60mA Class B: 3V 60mA Class C 1.8V 35mA	
	Power consumption	Max 100mA	
	Communication	From Card	9,600bps to 330,000bps
		From Computer	12Mpbs(USB full speed)
	Landing mechanism	Contact device	Friction contact
		Card insertion rating	Up to 100,000 insertion cycles
	Interface modes	CCID protocol	
	Reader performance Interface	USB connection	
	Electro-Magnetic standards	Europe	2004/108/EC
		USA	USAFCC part 15
Approvals	CE Marking, TUV-GS, EAC, FCC, cULus, ICES, RCM, VCCI, KCC, BSMI, India BIS, Ukraine		
Ergonomic compliance	ISO 9241-410		

HP USB 125 Antimicrobial (China only) / 128 Laser Mouse		
Dimensions (HxLxW)	112 x 63 x 36.2 mm	
Weight	85 g	
Environmental	Operating temperature	50° to 122° F (10° to 50° C)
	Non-operating temperature	-22° to 140° F (-30° to 60° C)
	Operating humidity	10% to 90% (non-condensing at ambient)
	Non-operating humidity	20% to 80% (non-condensing at ambient)
	Operating shock	40 g, six surfaces
	Non-operating shock	80 g, six surfaces
	Operating vibration	2-g peak acceleration
	Non-operating vibration	4-g peak acceleration
Electrical	Operating voltage	5 VDC, +/-5%
	Power consumption (typical)	100mA
	Resolution	1,200 DPI
	Sensor	Optical/ Laser USB mouse sensor
	Tracking speed	30 inch/sec (max)
	Tracking acceleration	8G(max), 1G=9.8m/s2
Mechanical	Connector	USB
	Cable length	6 ft (1.8 m)
	Color	Jack Black
Regulatory approvals	Compliant	UL, FCC, CE Mark, TUV GS, VCCI, BSMI, RCM, KCC, EAC

HP 175 Wired Mouse		
Dimensions (LxWxH)	123x65x39 (mm); 4.84x2.56x1.54 (in)	
Weight	80 (g);0.18 (lb)	
Environmental	Operating temperature	50° to 122° F (10° to 50° C)
	Non-operating temperature	-32° to 140° F (-40° to 60° C)
	Operating humidity	10% to 90% (non-condensing at ambient)
	Non-operating humidity	20% to 80% (non-condensing at ambient)
	Drop (out of box)	6 faces, 76cm, rigid surface
	Drop (in box)	6 faces, 1 corner and 3 edges on rigid surface, drop Height: 91cm
Electrical	Operating voltage	4.75~5.25V
	Power consumption (typical)	100mA
	Resolution	1,200 DPI
	Sensor	Optical USB mouse sensor
	System Interface	USB
	Cable length	6 ft (1.8 M)
Regulatory approvals	Compliant	UL, FCC, CE Mark, TUV GS, VCCI, BSMI, RCM, KCC, EAC

Technical Specifications – Input/Output Devices

HP 175 Antimicrobial Wired Mouse		
Dimensions (LxWxH)	123 x 65 x 39 (mm); 4.84 x 2.56 x 1.54 (in)	
Weight	80 (g);0.18 (lb)	
Environmental	Operating temperature	50° to 122° F (10° to 50° C)
	Non-operating temperature	-32° to 140° F (-40° to 60° C)
	Operating humidity	10% to 90% (non-condensing at ambient)
	Non-operating humidity	20% to 80% (non-condensing at ambient)
	Drop (out of box)	6 faces, 76cm, rigid surface
	Drop (in box)	6 faces, 1 corner and 3 edges on rigid surface, drop Height: 91cm
Electrical	Operating voltage	4.75~5.25V
	Power consumption (typical)	100mA
	Resolution	1,200 DPI
	Sensor	Optical USB mouse sensor
	System Interface	USB
	Cable length	6 ft (1.8 M)

HP 275 Wireless Mouse		
Dimensions (LxWxH)	123x65x39 (mm); 4.84x2.56x1.54 (in)	
Weight	73 (g);0.161 (lb) (no Battery）	
Environmental	Operating temperature	50° to 122° F (10° to 50° C)
	Non-operating temperature	-32° to 140° F (-40° to 60° C)
	Operating humidity	10% to 90% (non-condensing at ambient)
	Non-operating humidity	20% to 80% (non-condensing at ambient)
	Drop (out of box)	6 faces, 76cm, rigid surface
	Drop (in box)	6 faces, 1 corner and 3 edges on rigid surface, drop Height: 91cm
Electrical	Operating voltage	1.5VDC
	Power consumption (typical)	30mA
	Resolution	1,200 DPI
	Sensor	Optical mouse sensor
	System Interface	2.4GHz Wireless
	Cable length	NA
Regulatory approvals	Compliant	CB; FCC; IC; UL; ENCOM; ANATEL; SUBTEL; RCM; WPC; CONATEL; TRA; CE; TUV GS; ICASA; SRRC; DJID; TELEC; VCCI; KCC; SIRIM; NTC; IMDA; NCC; BSMI; NBTC

Technical Specifications – Input/Output Devices

HP 725 Multi-Device Rechargeable Wireless Mouse		
Dimensions (HxLxW)	114.89 x 73.26 x 39.86 (mm); 4.52 x 2.88 x 1.57 (in)	
Weight	90.1(g); 0.2(lb)	
Environmental	Operating temperature	-29°C ~ 60°C
	Non-operating temperature	-20°C ~ 65°C
	Operating humidity	N/A
	Non-operating humidity	0-95%RH
	Operating shock	40G, 2ms, 1 impact on the ± X, ± Y, and + Z axes, with a total of 6 impacts
	Non-operating shock	240G, 2ms, 1 impact on the ± X, ± Y, and + Z axes, with a total of 6 impacts
	Operating vibration	N/A
	Non-operating vibration	Frequency: 5-55-5 (Hz), Amplitude: 2mm, Vibration direction: X, Y, Z, three axes in total, Cycle time: 3 minutes/CYCLE, Number of cycles: 10 times, Test time: 30 minutes/axis, total 90 minutes
Electrical	Operating voltage	2.5V~3.8V
	Power consumption (typical)	2.4G Active=1.126mA Idle=0.108mA Sleep=0.042mA Power off=0.007mA BLE Active=1.057mA Idle=0.102mA Sleep=0.044mA Power off=0.005mA
	Resolution	1,200 DPI (Default) Range: 800->1200 (default)->1600->2400->3600->4000 DPI Adjustable by HPX (or HPAC) from 800 to 4000, every 50 dpi per step
	Sensor	PAW3220DB
	Tracking speed (Report rate)	125Hz
	Tracking acceleration	2.4GHz Wireless and Bluetooth
Mechanical	Color	Black
Regulatory approvals	Compliant	CB; FCC; IC; RCM; WPC; NTC; IMDA; BSMI; NCC; SRRC; SIRIM; TRA; EAC; ICASA; UKCA; KCC; TUV; RATEL; IFETEL; BIS; MOICT; iCTqatar; RoHS; Subtel; NKRZI

AUDIO/MULTIMEDIA

HP EliteDesk 8 Mini G1i Desktop AI PC

Type	Integrated
HD Stereo Codec	Realtek ALC3252
Audio I/O Ports	combo audio jack with CTIA and OMTP headset support
Internal Speaker Amplifier	2W class D mono amplifier for the internal speaker only. External speakers must be powered
Multi-streaming Capable	Playback multi-streaming can be enabled in the audio control panel to allow independent audio streams to be sent to/from the front and rear jacks or integrated speaker.
Sampling	Independent sampling rates for DAC's and ADC's; supports resolutions from 16 to 24-bit; 44.1 kHz to 192 kHz for DAC and 44.1 kHz to 192 kHz for ADC
Wavetable Syntheses	Yes - Uses OS soft wavetable
Analog Audio	Yes
# of Channels on Line-Out	Stereo (Left & Right channels)
Internal Speaker	Yes

HP EliteDesk 8 SFF G1i Desktop AI PC

Type	Integrated
HD Stereo Codec	Realtek ALC 3252
Audio I/O Ports	Front: Headset connector supports a CTIA and OMTP style headset and is re-taskable as a Line-in, Line-out, Microphone-in or Headphone-out port Rear: Line-out, Line-in*, 3.5mm and support stereo and retasking
Internal Speaker Amplifier	2W class D mono amplifier for the internal speaker only. External speakers must be powered
Multi-streaming Capable	Playback multi-streaming can be enabled in the audio control panel to allow independent audio streams to be sent to/from the front and rear jacks or integrated speaker.
Sampling	Independent sampling rates for DAC's and ADC's; supports resolutions from 16 to 24-bit; 44.1 kHz to 192 kHz for DAC and 44.1 kHz to 96 kHz for ADC
Wavetable Syntheses	Yes – Uses OS soft wavetable
Analog Audio	Yes
# of Channels on Line-Out	Stereo (Left & Right channels)
Internal Speaker	Yes

***NOTE:** System default is line-out. Line-in / Line-out can be adjusted through the audio setting

Technical Specifications – Audio/Multimedia

HP Elite Tower 800/880 G1i Desktop PC

Type	Integrated
HD Stereo Codec	Realtek ALC 3252
Audio I/O Ports	Front: Headset connector supports a CTIA and OMTP style headset and is re-taskable as a Line-in, Line-out, Microphone-in or Headphone-out port Rear: Line-out, Line-in*, 3.5mm and support stereo and retasking
Internal Speaker Amplifier	2W class D mono amplifier for the internal speaker only. External speakers must be powered
Multi-streaming Capable	Playback multi-streaming can be enabled in the audio control panel to allow independent audio streams to be sent to/from the front and rear jacks or integrated speaker.
Sampling	Independent sampling rates for DAC's and ADC's; supports resolutions from 16 to 24-bit; 44.1 kHz to 192 kHz for DAC and 44.1 kHz to 192 kHz for ADC
Wavetable Syntheses	Yes - Uses OS soft wavetable
Analog Audio	Yes
# of Channels on Line-Out	Stereo (Left & Right channels)

***NOTE:** System default is line-out. Line-in / Line-out can be adjusted through the audio setting

HP EliteStudio 8 All-in-One G1i 23.8 / 27-inch Desktop AI PC

Type	Integrated
HD Stereo Codec	Realtek ALC3274
Audio I/O Ports	Down facing headset connector supports a CTIA/OMTP style headset and is re-taskable as a Line-in, Line-out, Microphone-in or Headphone-out port All ports are 3.5mm and support stereo
Internal Speaker Amplifier	5W per channel class D stereo amplifier for the internal speakers only
Multi-streaming Capable	Playback multi-streaming can be enabled in the audio control panel to allow independent audio streams to be sent to/from the front and rear jacks or integrated speakers.
Sampling	Independent sampling rates for DAC's and ADC's; supports resolutions from 16 to 24-bit; 44.1 kHz to 192 kHz for DAC and 44.1 kHz to 192 kHz for ADC
Wavetable Syntheses	Yes - Uses OS soft wavetable
Analog Audio	Yes
# of Channels on Line-Out	Stereo (Left & Right channels)
Internal Speaker	Yes - Stereo

Technical Specifications – Integrated Webcam and Microphone

INTEGRATED WEBCAM AND MICROPHONE

Integrated Webcam and Microphone
Optional integrated 5 MP Webcam + Color Light Sensor with integrated dual array digital microphones;
Optional integrated 5 MP Webcam + IR Sensor + ISP + Color Light Sensor with integrated dual array digital microphones (Supports Windows Hello and human presence detection))

POWER

HP EliteDesk 8 Mini G1i Desktop AI PC

Unit Environment and Operating Conditions

Temperature Range	Operating: 5°C ~35°C Non-Operating: -40°C ~66°C
Relative Humidity	Operating 5% to 90% relative humidity at max inlet temperature Non-Operating 5% to 90% relative humidity at max inlet temperature
Maximum Altitude (unpressurized)	Operating: 5000m Non-operating: 50,000 ft. (15240 m)

HP EliteDesk 8 SFF G1i Desktop AI PC

Unit Environment and Operating Conditions

Temperature Range	Operating: 5°C ~35°C Non-Operating: -40°C ~66°C
Relative Humidity	Operating 5% to 90% relative humidity at max inlet temperature Non-Operating 5% to 90% relative humidity at max inlet temperature
Maximum Altitude (unpressurized)	Operating: 5000m Non-operating: 50,000 ft. (15240 m)

HP EliteDesk 8 Tower G1i / G1i E Desktop AI PC

Unit Environment and Operating Conditions

Temperature Range	Operating: 5°C ~35°C Non-Operating: -40°C ~66°C
Relative Humidity	Operating 5% to 90% relative humidity at max inlet temperature Non-Operating 5% to 90% relative humidity at max inlet temperature
Maximum Altitude (unpressurized)	Operating: 5000m Non-operating: 50,000 ft. (15240 m)

HP EliteStudio 8 All-in-One G1i 23.8 / 27-inch Desktop AI PC

Unit Environment and Operating Conditions

Temperature Range	Operating: 5°C ~45°C Non-Operating: -40°C ~66°C
Relative Humidity	Operating 5% to 90% relative humidity at max inlet temperature Non-Operating 5% to 90% relative humidity at max inlet temperature
Maximum Altitude (unpressurized)	Operating: 5000m Non-operating: 50,000 ft. (15240 m)

Technical Specifications – Power

	Mini	SFF	TWR	AiO
External Power Supplies[1]	90W EPS, active PFC, 88% average efficiency at 115V & 89% at 230Vac 100W EPS Type-C[2], active PFC, 88% average Efficiency at 115V & 89% at 230Vac 120W EPS, active PFC, 88% average efficiency at 115V & 89% at 230Vac 150W EPS, active PFC, 88% efficiency in 115Vac / 89% efficiency in 230Vac 180W EPS, active PFC, 88% average efficiency at 115V & 89% at 230Vac	N/A	N/A	N/A
Internal Power Supply	N/A	**280W active PFC** **Efficiency at 115Vac** 80PLUS Platinum certified 90/92/89% efficient at 20/50/100% load **Efficiency at 230Vac** 91/93/90% at 20/50/100% load Which meet 80PLUS Platinum **180W active PFC** **Efficiency at 115Vac** 80PLUS Gold certified 87/90/87% efficient at 20/50/100% load **Efficiency at 230Vac** 90/92/89% at 20/50/100% load Which meet 80PLUS Gold	**500W/280W/400W active PFC** **Efficiency at 115Vac** 80PLUS Platinum certified 90/92/89% efficient at 20/50/100% load **Efficiency at 230Vac** 91/93/90% at 20/50/100% load Which meet 80PLUS Platinum	**280W active PFC ,** **Efficiency at 115Vac** 80PLUS Platinum certified 90/92/89% efficient at 20/50/100% load **Efficiency at 230Vac** 90/92/89% at 20/50/100% load Which meet 80PLUS Platinum
Operating Voltage Range	90Vac~264Vac	90Vac~264Vac	90Vac~264Vac	90Vac~264Vac
Rated Voltage Range	100Vac~240Vac	100Vac~240Vac	100Vac~240Vac	100Vac~240Vac
Rated Line Frequency	50HZ~60HZ	50HZ~60HZ	50HZ~60HZ	50HZ~60HZ
Operating Line Frequency	47HZ~63HZ	47HZ~63HZ	47HZ~63HZ	47HZ~63HZ
Rated Input Current with Energy Efficient* Power Supply	90W≦1.7A 100W≦1.6A 120W≦1.7A 150W≦2.5A 180W≦2.5A	280W Platinum≦3.3A 180W Gold ≦2.3A	400W Platinum≦5.2A 280W Platinum≦3.3A 500W Platinum≦6A	280W≦3.2A

Technical Specifications – Power

DC Output	+19.5V	+12V	+12V	+20V

1. External power supplies, power cords, cables and peripherals are not low halogen. Service parts obtained after purchase may not be low halogen.
2. The 100W USB Type-C power adapter is not certified for medical use. For medical environments, customers should use the conventional (barrel type) power adapter.

	Mini	**SFF**	**TWR**	**AiO**
Current Leakage (NFPA 99: 2012)	Less than 40 microamps of leakage current at 250 Vac with the ground wire disconnected, as required for Non-patient Electrical Appliances and Equipment used in a patient care facility or that contact patients in normal use. Per section 10.3.5.1. Less than 40 microamps of leakage current at 250 Vac with the ground wire intact with normal polarity, as required for Non-patient Electrical Appliances and Equipment used in a patient care facility or that contact patients in normal use. Per section 10.3.5.1.	Less than 500 microamps of leakage current at 264 Vac with the ground wire disconnected, as required for Non-patient Electrical Appliances and Equipment used in a patient care facility or that contact patients in normal use. Per section 10.3.5.1. Less than 100 microamps of leakage current at 264 Vac with the ground wire intact with normal polarity, as required for Non-patient Electrical Appliances and Equipment used in a patient care facility or that contact patients in normal use. Per section 10.3.5.1.	Less than 500 microamps of leakage current at 264 Vac with the ground wire disconnected, as required for Non-patient Electrical Appliances and Equipment used in a patient care facility or that contact patients in normal use. Per section 10.3.5.1. Less than 100 microamps of leakage current at 264 Vac with the ground wire intact with normal polarity, as required for Non-patient Electrical Appliances and Equipment used in a patient care facility or that contact patients in normal use. Per section 10.3.5.1.	Less than 500 microamps of leakage current at 264 Vac with the ground wire disconnected, as required for Non-patient Electrical Appliances and Equipment used in a patient care facility or that contact patients in normal use. Per section 10.3.5.1. Less than 100 microamps of leakage current at 264 Vac with the ground wire intact with normal polarity, as required for Non-patient Electrical Appliances and Equipment used in a patient care facility or that contact patients in normal use. Per section 10.3.5.1.
Power Supply Fan	N/A	70 mm variable speed	70 mm variable speed	N/A
Power cord length	6.0 ft. (1.83 m)[1]	6.0 ft. (1.83 m)[2]	6.0 ft. (1.83 m)[2]	6.0 ft. (1.83 m)[1,2]
External Power Adapter	External power	Internal power	Internal power supply	Internal power supply
Dimensions	90W: 127 x 51 x 30 mm 100W: 136 x 60 x 22 mm 120W: 138 x 68.5 x 25.4 mm 150W: 148 x 75.5 x 25.4 mm 180W: 165.5 x 75.9 x 25.4 mm	165 x 95 x 73 mm	165 x 95 x 73 mm	90 x 130 x 26 mm
Total Cord Length	1 m, 6.0 ft. (1.83 m)	6.0 ft. (1.83 m)	6.0 ft. (1.83 m)	6.0 ft. (1.83 m)

1. Power cord length will be varied from different type of cords start from 1.8m.
2. The length of India power cord is 2.0m

Technical Specifications – Power

The power supply shall comply with harmonic input current requirements as detailed in EN61000-3-2 and JEIDA MITI standards.
The harmonic input current requirements must be met under the following operating conditions:
Load Requirements: 50% and 100%
Input Voltage: 230Vac/50Hz.
For active power factor correction the power factor at 50% &100% loads shall be greater than 0.9 over the entire nominal input voltage range (100-127VAC and 200-240VAC).

Condition	Standard Efficiency	82/85/82%	85/88/85%	87/90/87%	90/92/89%	Input Voltage
10% of Rated Load	-	75%	81%	84%	86%	115Vac/60HZ
20% of Rated Load	-	82%	85%	87%	90%	115Vac/60HZ
50% of Rated Load	-	85%	88%	90%	92%	115Vac/60HZ
	PF>0.9	PF>0.9	PF>0.9	PF>0.9	PF>0.95	115Vac/60HZ
100% of Rated Load	70%	82%	85%	87%	89%	115Vac/60HZ
	PF>0.9	PF>0.9	PF>0.9	PF>0.9	PF>0.9	230Vac/50HZ

WEIGHTS & DIMENSIONS

	Mini	SFF	TWR	AiO
Chassis (WxDxH)	6.97 x 7.13 x 1.35 in (177 x 181 x 34 mm)	11.95 x 12.13 x 3.94 in (303.5 x 308 x 100 mm)	6.1 x 12.13 x 13.27 in (155 x 308 x 337 mm)	See the table below.
System Volume	66.86 cu in (1.09 L)	570.57 cu in (9.35 L)	982 cu in (16.1 L)	
Standard System Weight	2.97 lb (1.35 kg)	10.4 lb (4.7 kg)	13.7 lb (6.22 kg)	
Heavy Configuration Weight	N/A	11.5 lb (5.21 kg)	15.6 lb (7.09 kg)	
Stand Dimensions (WxDxH)	117 x 160 x 20 mm	151.7 x 199.8 x 38.2mm	N/A	
Packaging (WxDxH)	Packaging 1: 18.9 x 4.1 x 9.4 in (481 x105 x 240 mm) Packaging 2[1]: 19.6 x 5.2 x 9.3 in (498 x x132 x 235 mm)	7.87 x 19.65 x 15.51 in (200 x 499 x 394 mm) **MPP:**7.87 x 19.65 x 15.51 in (200 x 499 x 394 mm)	15.75 x 19.65 x 11.30 in (400 x 499 x 287 mm) **MPP:**15.75 x 19.65 x 11.30 in (400 x 499 x 287 mm)	
Shipping Weight	2.95 kg (6.49 lb)	13.04 lb (5.92 kg) **MPP:** 13.74 lb (6.24 kg)	18.46 lb (8.38 kg) **MPP**: 19.34 lb (8.78kg)	
Multipack Packaging	20.28 x16.54 x 25 in (515 x 420 x 636 mm)	8 units per pack 32 units per pallet 1200 x 1000 x 1317 mm (include the pallet)	5-units per pack 20 per pallet 1200 x 1000 x 1310 mm (including pallet)	
Palletization Profile (Molded Pulp)	Palletization 1: 22-units per layer 8 layers max 176 units per pallet 46.14 x 37.87 x 81.5 in (1172 x 962 x 2070 mm) (including pallet) Palletization 2: 10-units per layer 10 to 19 layers max depending on details of freight 100 or 190 units per pallet depending on details of freight 46.26 x 39.21 x 103.74 in, (1175 x 996 x 2635 mm) (including pallet)	6 units per layer 12 layers max 72 units per pallet 1200 x 1000 x 2494 mm (include the pallet)	6-units per layer 8 layesr max 48 per pallet 1200 x 1000 x 2416 mm (including pallet)	

Technical Specifications – Weights and Dimensions

1. Only available on selected US, Brazil & Japan SKU (HP EliteDesk 8 Mini G1i Desktop AI PC).
2. Actual weight depends on configuration.
3. Packaging material used will vary by country.
4. TWR/SFF system weight uses 1 HDD + 1 ODD + 1 DIMM configuration.
5. The palletization is for single pack.
6. Palletization options depend on the factories.

STANDS AND DIMENSIONS

HP EliteStudio8 G1i 23.8” AIO Adjustable Height Stand

(Landscape Mode)

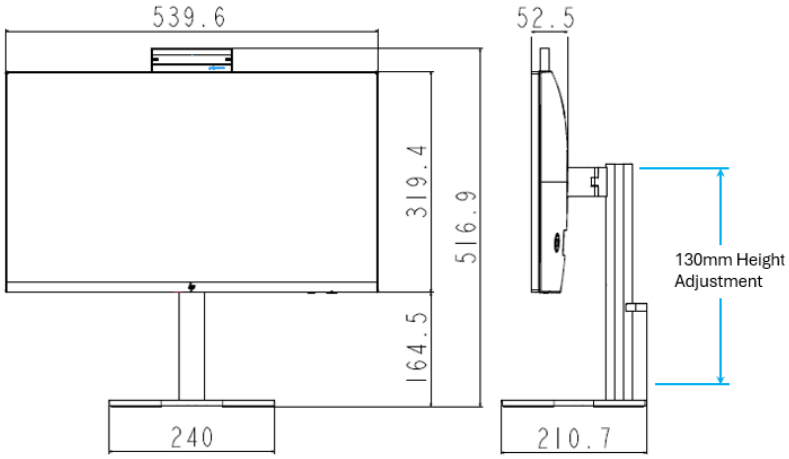

(Portrait Mode)

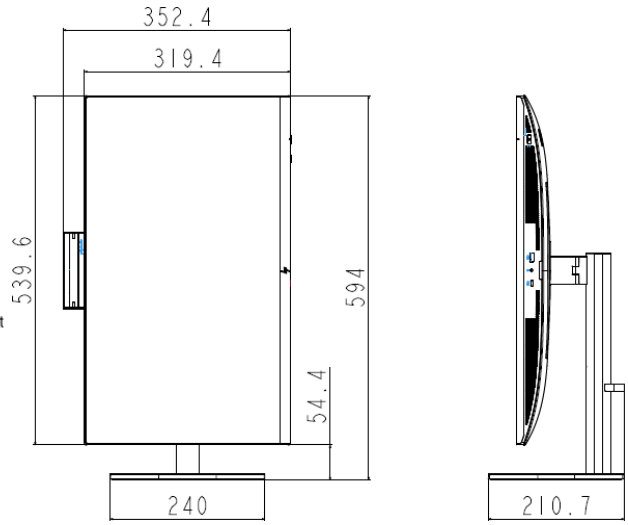

HP EliteStudio8 G1i 23.8” AIO Articulating Stand

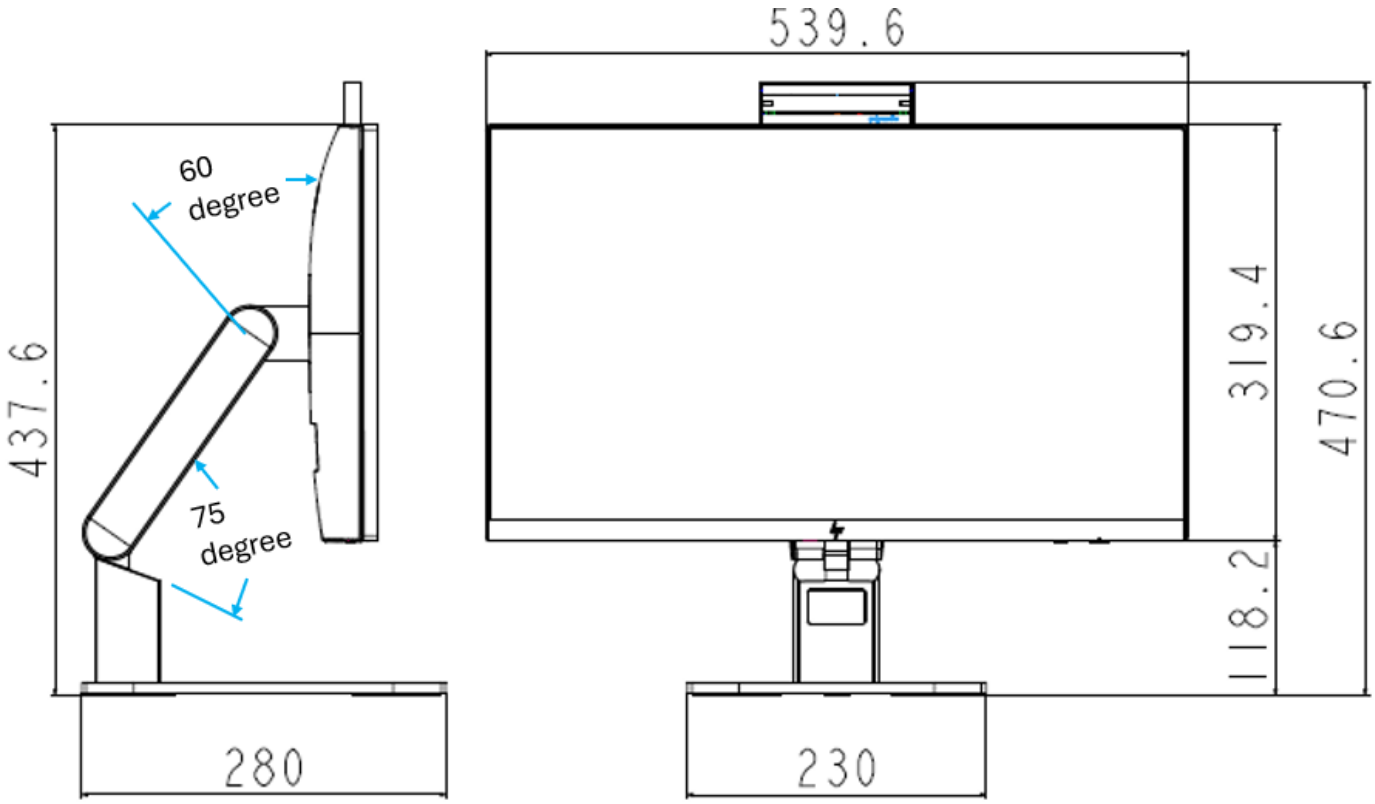

HP EliteStudio8 G1i 27" AIO Adjustable Height Stand

(Landscape Mode)

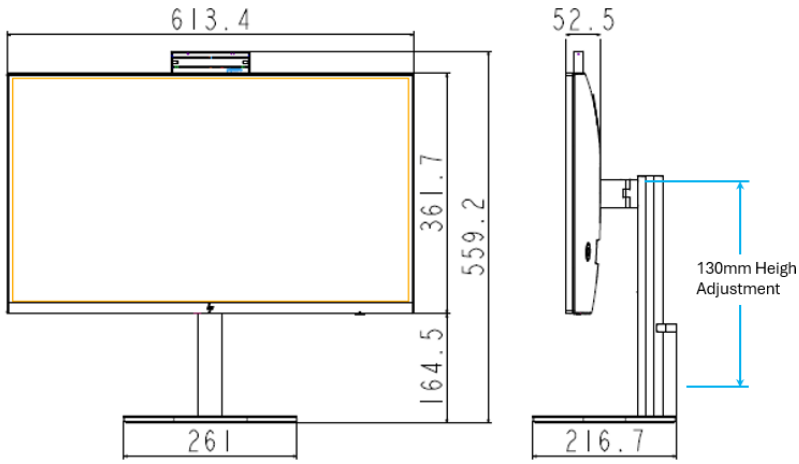

(Portrait Mode)

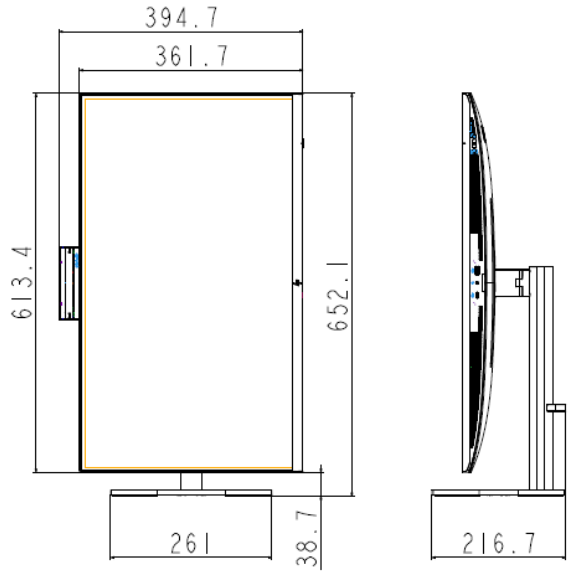

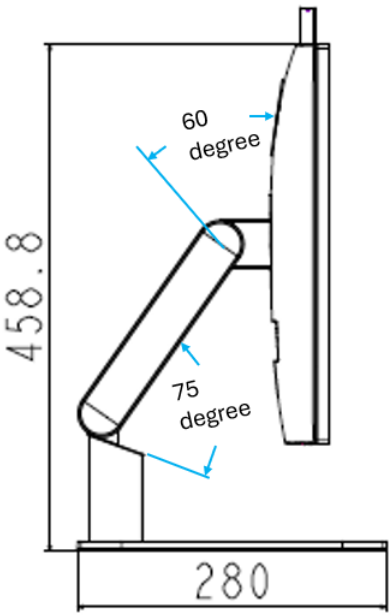

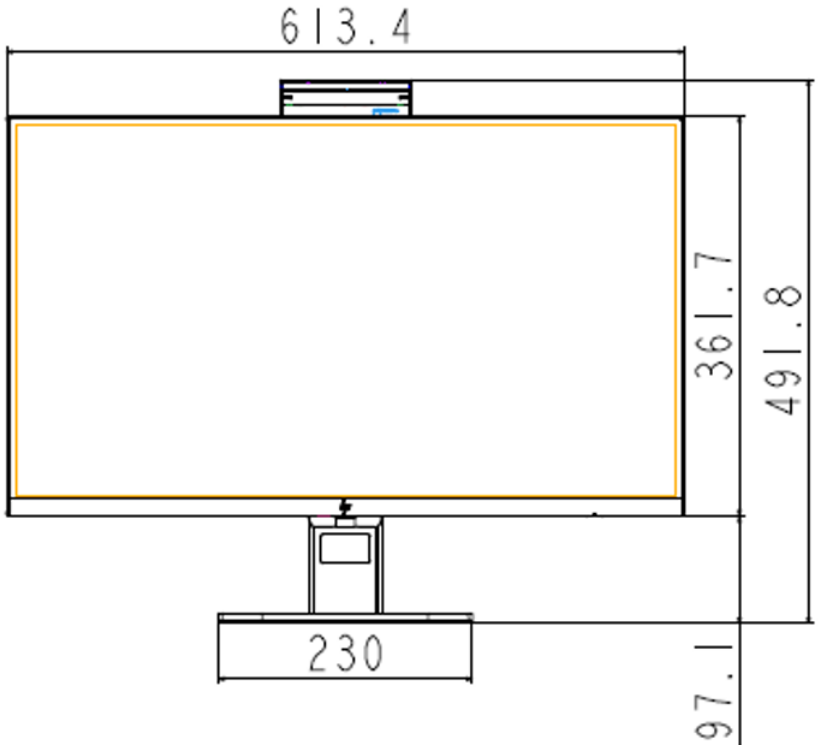

HP EliteStudio8 G1i 23.8“ AIO with VESA Plate

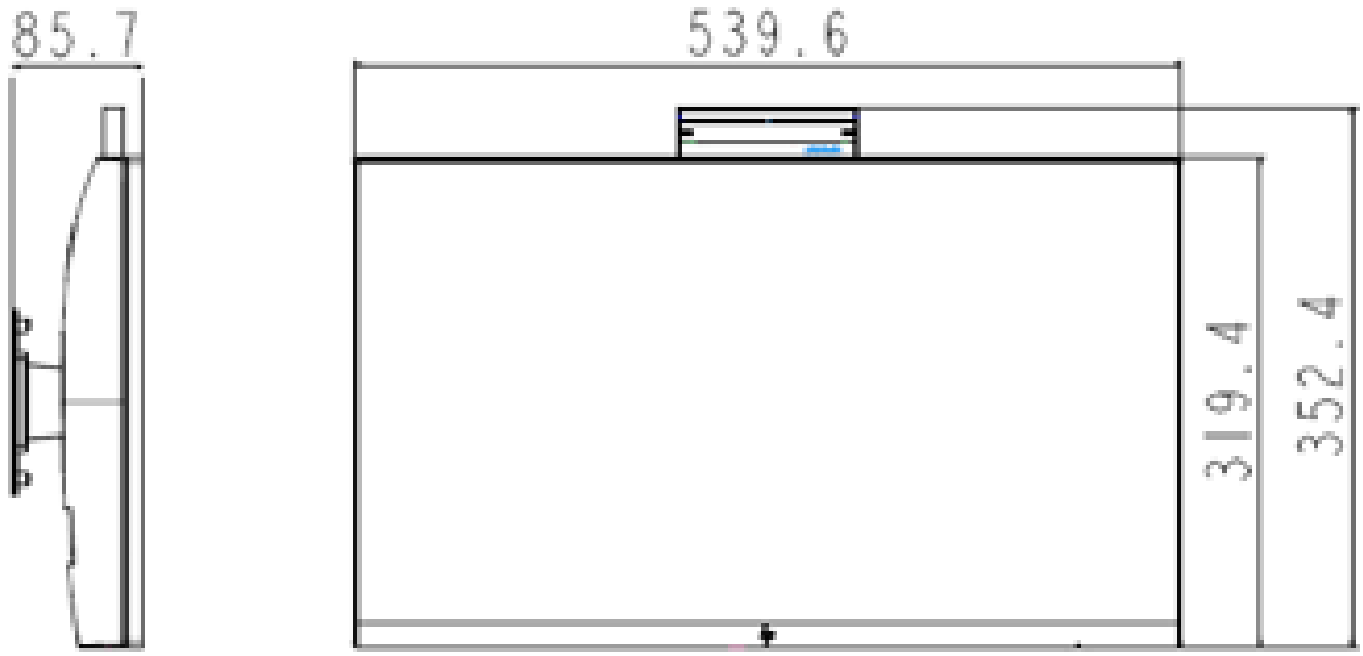

HP EliteStudio8 G1i 27“ AIO with VESA Plate

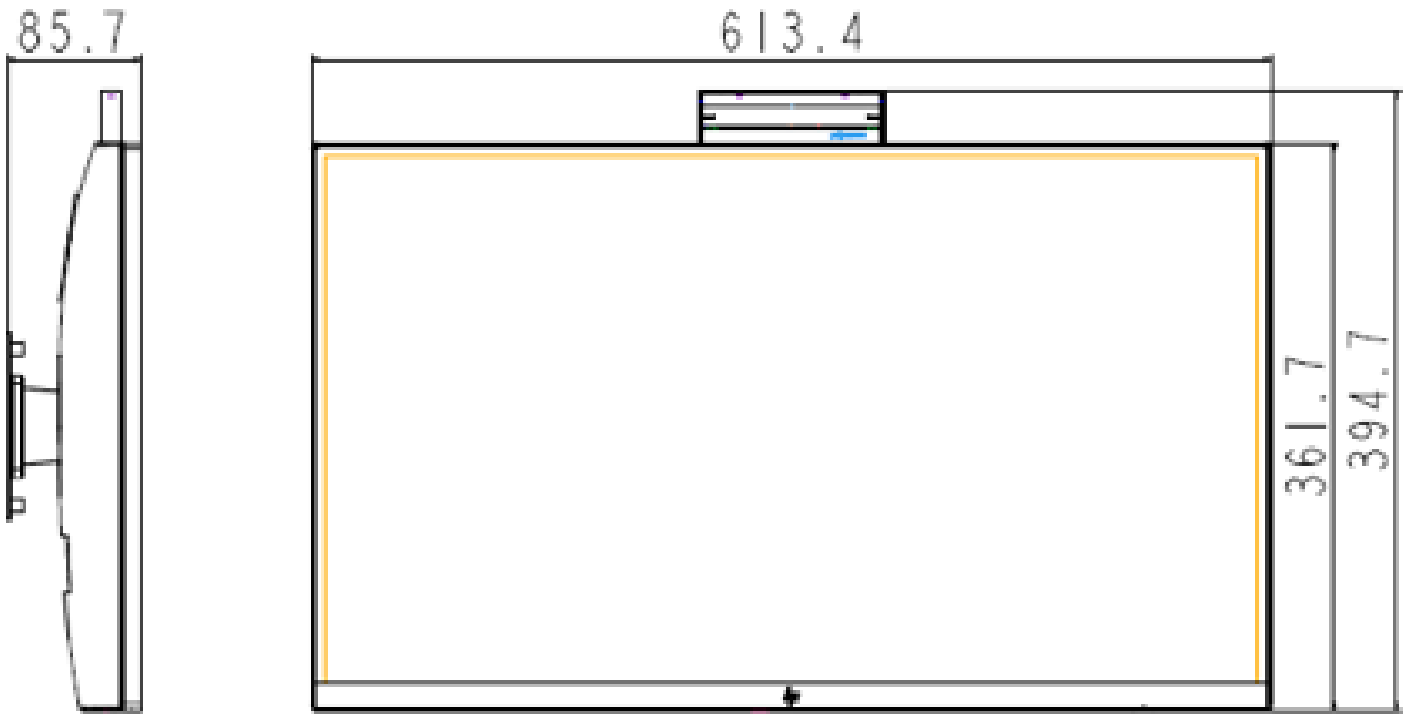

Technical Specifications – Stands and Dimensions

Adjustable Height Stand:	Height - Vertical/Landscape Adjustment	130mm (±3 mm)
	Pivot Function	Landscape/Portrait pivot direction Counter clockwise
	Tilt Angle	[-5°] to [+20°] in landscape and portrait
	Rotation (Swivel)	90° [Clockwise 45°, Counter clockwise 45°]
Articulating stand:	Rotation Lift angle range Landscape	75° [-20°] to [+55°]
	Pivot Function	No/Landscape only
	Tilt Angle (Display)	Backward: 60° Forward: 0°
	Rotation (swivel)	No swivel

ALL-IN-ONE WEIGHTS AND DIMENSIONS

HP EliteStudio 8 All-in-One G1i 23.8-inch Desktop AI PC

		Without Stand (VESA Cover Plate)		Articulating Stand		Adjustable Height Stand	
		cm/kg	**inch/lb**	**cm/kg**	**inch/lb**	**cm/kg**	**inch/lb**
Product (Landscape orientation)	**Width**	539.6	21.2	539.6	21.2	539.6	21.2
	Length/Depth	85.7	3.4	210.7	8.3	280	11.0
	Height (include Webcam pop up)	352.4	13.9	516.9	20.4	470.6	18.5
Product (Portrait orientation)	**Width**	352.4	13.9	352.4	13.9	N/A	N/A
	Length/Depth	85.7	3.4	210.7	8.3	N/A	N/A
	Height (include Webcam pop up)	539.6	21.2	594	23.4	N/A	N/A
	Weight	7.13	15.7	8.54	18.8	10.45	23.0
Package	**Width**	198	7.8	198	7.8	198	7.8
	Length/Depth	750	29.5	750	29.5	750	29.5
	Height	480	18.9	480	18.9	480	18.9
	Weight	11.88	26.2	13.29	29.3	15.20	33.5
Palletization for Sea/Rail	**Width**	1000	39.4	1000	39.4	1000	39.4
	Length/Depth	1200	47.2	1200	47.2	1200	47.2
	Height	2060	81.1	2060	81.1	2060	81.1
	Weight	347.14	765.3	386.62	852.4	440.1	970.3
	Qty / Layer	7		7		7	
	Layers	4		4		4	
Qty / Pallet via Sea/Rail		28		28		28	
Qty / Pallet via Air		21		21		21	

NOTE: Packaging material used will vary by country.
Package weight is based on EPE package.
Actual system weight will depend on the system configuration.

Technical Specifications – All-in-One Weights and Dimensions

HP EliteStudio 8 All-in-One G1i 27-inch Desktop AI PC

		Without Stand (VESA Cover Plate)		Articulating Stand		Adjustable Height Stand	
		cm/kg	inch/lb	cm/kg	inch/lb	cm/kg	inch/lb
Product (Landscape orientation)	Width	613.4	24.1	613.4	24.1	613.4	24.1
	Length/Depth	85.7	3.4	216.7	8.5	280	11.0
	Height (include Webcam pop up)	394.7	15.5	559.2	22.0	491.8	19.4
Product (Portrait orientation)	Width	394.7	15.5	394.7	15.5	N/A	N/A
	Length/Depth	85.7	3.4	216.7	8.5	N/A	N/A
	Height (include Webcam pop up)	613.4	24.1	652.1	25.7	N/A	N/A
	Weight	8.5	18.7	10.07	22.2	11.83	26.1
Package	Width	228	9.0	228	9.0	228	9.0
	Length/Depth	740	29.1	740	29.1	740	29.1
	Height	480	18.9	480	18.9	480	18.9
	Weight	13.72	30.2	15.32	33.8	17.12	37.7
Palletization for Sea/Rail	Width	1000	39.4	1000	39.4	1000	39.4
	Length/Depth	1200	47.2	1200	47.2	1200	47.2
	Height	2060	81.1	2060	81.1	2060	81.1
	Weight	343.78	757.9	382.18	842.6	425.38	937.8
	Qty / Layer	6		6		6	
	Layers	4		4		4	
Qty / Pallet via Sea/Rail		28		24		24	
Qty / Pallet via Air		21		18		18	

NOTE: Packaging material used will vary by country.
Package weight is based on EPE package.
Actual system weight will depend on the system configuration.

MISCELLANEOUS FEATURES

Management Features

- Advanced Configuration and Power Management interface (ACPI). Allows the system to wake from a low power mode. Controls system power consumption, making it possible to place individual cards and peripherals in a low-power or powered-off state without affecting other elements of the system.
- Intel® Wired for Management support; industry wide initiative to make Intel® architecture based PCs, servers and mobile computers more inherently manageable out-of-the-box and over the network
- Dual State Power Button; acts as both an on/off button and a suspend-to-sleep button

Serviceability Features

- Dual colored power LED on front of computer to indicate either normal or fault condition
- Diagnostic LED Explanation Table:
  - Power LED will blink red 2 to 5 times, then blink white 2 or more times, then repeat (with beep tones for each blink initially):
    - 2 red + 2 white User must provide file for BIOS recovery (USB storage typically)
    - 2 red + 3 white User must enter a key sequence to proceed with recovery by policy
    - 2 red + 4 white BIOS recovery is in progress
    - 3 red + 2 white Memory could not be initialized
    - 3 red + 3 white Graphics adaptor could not be found
    - 3 red + 4 white Power supply failure / not connected
    - 3 red + 5 white Processor not installed
    - 3 red + 6 white Current processor does not support an enabled feature
    - 4 red + 2 white Processor has exceeded its temperature threshold / system thermal shutdown
    - 4 red + 3 white System internal temperature has exceeded its threshold
    - 5 red + 2 white System controller firmware is not valid
    - 5 red + 3 white System controller detected BIOS is not executing
    - 5 red + 4 white BIOS could not complete initialization / PCA failure
    - 5 red + 5 white System controller rebooted the system after a health or recovery timer triggered
- HP PC Hardware Diagnostics UEFI:
  - This utility enables hardware level testing outside the operating system on many components. The diagnostics can be invoked by pressing F2 at POST, and is available as a download from HP Support
- System/Emergency ROM
- Flash ROM
- CMOS Battery
- Holder for easy replacement
- 1 Aux Power LED on System PCA
- Processor ILM Socket for easy Upgrade
- Over-Temp Warning on Screen (Requires IM Agents)
- DIMM Connectors for easy Upgrade
- Clear CMOS Button
- NIC LEDs (integrated) (Green & Amber)
- Dual Color Power bottom LED – To indicate Normal Operations and Fault Conditions
- Tool-less Hood Removal
- Front power switch
- System memory can be upgraded without removing the system board or any internal components
- Tool-less Hard Drive, CD & Diskette Removal (For MT, SFF, and DM only)
- Blue Pull Tabs, and Quick Release Latches for easy identification

Technical Specifications – Miscellaneous features

Additional Features	Description
Tower Orientation	Product can be oriented as either a desktop (horizontal) or a tower (vertical) for Tower, SFF, and Mini only. SFF/Mini requires optional stand.
Drive Lock	Implementation of the industry standard ATA Security feature set. When enabled, it prevents software access to user data on the drive until one or two user-defined passwords are provided.
Boot Sectors Protection	MBR and GPT sectors of the hard drive are critical to booting the operating system. By saving the MBR or GPT data (depending on the how the OS was installed), the BIOS will be able to monitor for changes and allow the user to override them with the backup copy at boot-up.
Drive Protection System	DPS Access through F10 Setup during Boot (for SATA hard drive only)
	A diagnostic hard drive self- test. it scans critical physical components and every sector of the hard drive for physical faults and then reports any faults to the user
	Running independently of the operating system, it can be accessed through a Windows-based diagnostics utility or through the computer's setup procedure. It produces an evaluation on whether the hard drive is the source of the problem and needs to be replaced
	The system expands on the Self-Monitoring, Analysis, and Reporting Technology (SMART), a continuously running systems diagnostic that alerts the user to certain types of failures
SMART Technology (Self-Monitoring, Analysis and Reporting Technology)	Allows hard drives to monitor their own health and to raise flags if imminent failures were predicted
SMART I - Drive Failure Prediction	Predicts failures before they occur. Tracks fault prediction and failure indication parameters such as re-allocated sector count, spin retry count, calibration retry count
SMART II - Off-Line Data Collection	By avoiding actual hard drive failures, SMART hard drives act as "insurance" against unplanned user downtime and potential data loss from hard drive failure
SMART III – Off-Line Read Scanning with Defect Reallocation	IOEDC: I/O Error Detection Circuitry
SMART IV – End-to-End CRC for hard drives	Detects errors in Read/Write buffers on HDD cache RAM

AFTER MARKET OPTIONS

Graphics Solutions	Mini	SFF	TWR	AiO	Part Number
NVIDIA RTX A400 4GB Graphics		X	X		AV8J3AA
NVIDIA RTX A1000 8 GB Graphics		X			AV8J4AA
AMD Radeon RX 6300 2GB GDDR6 DP+HDMI FH			X		7Y6P7AA
AMD Radeon RX 6300 2GB GDDR6 DP+HDMI LP		X			803S9AA
Intel Arc A380 6GB GDDR6 FH PCIe x16 3DP+HDMI			X		9Q6G0AA
HP DisplayPort to HDMI True 4k Adapter	X	X	X	X	2JA63AA
HP DisplayPort Cable Kit		X	X	X	VN567AA
HP HDMI Standard Cable Kit	X	X	X	X	T6F94AA
HP HDMI to VGA Adapter	X	X	X	X	H4F02AA
HP DisplayPort to VGA Adapter	X	X	X	X	F7W97AA
HP DisplayPort to DVI-D Adapter	X	X	X	X	F7W96AA
HP USB-C to DisplayPort Adapter G2	X	X	X	X	8Y8Y1AA
HP USB-C to HDMI 2.0 Adapter	X	X	X	X	1WC36AA
HP USB-C to USB 3.0 Adapter	X	X	X	X	N2Z63AA
HP Single Mini Display Port Adapter to Display Port Adapter		X	X		2MY05AA

Desktop Mini Accessories	Mini	SFF	TWR	AiO	Part Number
HP Desktop Mini 90W Power Supply Kit	X				L4R65AA
HP Desktop Mini v4+ VESA Sleeve	X (95W and discrete GPU skus not supported)				99T54AA
HP Desktop Mini v4+ VESA Sleeve with Power Supply Holder	X (Discrete GPU skus not supported)				99T55AA
HP 150W Elite Mini EPS Holder*	X				657R3AA
HP B200 PC Mounting Bracket	X				762T5AA
HP B250 PC Mounting Bracket	X				8RA46AA
HP B300 PC Mounting Bracket	X				2DW53AA
HP B300 PC Mounting Bracket with Power Supply Holder	X (Discrete GPU skus and 150W/180W adapter not supported)				7DB37AA
HP B550 PC Mounting Bracket	X				16U00AA

HP B560 PC Mounting Bracket	X				763U8AA
HP Desktop Mini Vertical Chassis Stand	X				763U8AA
HP Quick Release Bracket 2	X			X	6KD15AA
HP Desktop Mini 65w Power Supply Kit*	X				L2X04AA

NOTE*: Compatible with HP B300 PC Mounting Bracket (2DW53AA) and HP Desktop Mini v4+ VESA Sleeve (99T54AA)

AIO Accessories	**Mini**	**SFF**	**TWR**	**AiO**	**Part Number**
HP EliteStudio 8 G1i 27 Adjustable Height Stand*				X	B6BT7AA
HP EliteStudio 8 G1i 23.8 Adjustable Height Stand**				X	B6BT6AA
HP EliteStudio 8 G1i Articulating Stand				X	B6BT9AA
HP All-in-One G1i VESA Plate				X	B6BT8AA

***NOTE:** Support 870 AIO only
****NOTE:** Support 840 AIO only

Data Storage Drives	**Mini**	**SFF**	**TWR**	**AiO**	**Part Number**
HP PCIe Gen 4 NVME TLC M.2 512GB SSD	X	X	X	X	406L8AA
HP PCIe Gen 4 NVME TLC M.2 1TB SSD	X	X	X	X	406L7AA
HP 1TB 7200rpm SATA 3.5” Hard Drive		X	X		QK555AA
HP G1i TWR 3.5in HDD Carrier			X		BJ3M6AA
HP G1i TWR 3.5in HDD Exp			X		BJ3M8AA
HP Small Form Factor 3.5in G1i HDD Expansion Module		X			BJ3M7AA

Input Devices	**Mini**	**SFF**	**TWR**	**AiO**	**Part Number**
HP 125 G2 Wired Keyboard	X	X	X	X	AY2Y7AA
HP 125 Wired Mouse	X	X	X	X	265A9UT
HP 128 Laser Wired Mouse	X	X	X	X	265D9AA
HP 320K G2 Wired USB Keyboard	X	X	X	X	9SR37UT
HP Wired Desktop 320M Mouse	X	X	X	X	9VA80AA
HP Wired Desktop 320MK Mouse and Keyboard G2	X	X	X	X	9SR36UT
HP Business Slim v2 Smart Card USB Keyboard	X	X	X		A71J9AA
HP 655 Wireless Keyboard and Mouse Combo G2	X	X	X	X	4R009UT
HP 455 G2 Programmable WRLS USB Keyboard	X	X	X	X	B08ZDAA
HP 405 Multi-Device Wired Backlit Keyboard	X	X	X	X	7N7B9UT
HP 725 Multi-Device Rechargeable Wireless Keyboard	X	X	X	X	9T5B2AA
HP 725 Multi-Device Rechargeable Wireless Keyboard and Mouse Combo	X	X	X	X	9T5B0UT
HP 515 Ultra-Fast Rechargeable Wireless Mouse	X	X	X	X	9C2F7AA
HP 475 Dual-Mode Keyboard	X	X	X	X	7N7B9AA
HP 685 Comfort Dual-Mode Keyboard	X	X	X	X	8T6L9UT
HP 685 Comfort Dual-Mode Keyboard and Mouse Combo	X	X	X	X	8T6L7UT

HP 685 Comfort Dual-Mode Mouse	X	X	X	X	8T6M0UT

System Memory	Mini	SFF	TWR	AiO	Part Number
HP 8GB DDR5-5600 UDIMM		X	X		A9TF0AA
HP 16GB DDR5-5600 UDIMM		X	X		A9TF1AA
HP 32GB DDR5-5600 UDIMM		X	X		A9TF3AA
HP 8GB DDR5-5600 SODIMM	X			X	B8CA1AA
HP 16GB DDR5-5600 SODIMM	X			X	B8CA2AA
HP 32GB DDR5-5600 SODIMM	X			X	B8CA3AA

Multimedia Devices	Mini	SFF	TWR	AiO	Part Number
HP S101 Speaker Bar	X	X	X		5UU40AA
HP Z G3 Conferencing Speaker Bar wStand	X	X	X		647Y2AA

Security Devices	Mini	SFF	TWR	AiO	Part Number
HP Business PC Security Lock v3 Kit		X	X		3XJ17AA
HP Keyed Cable Lock 10mm	X	X	X	X	T1A62AA
HP Master Keyed Cable Lock 10mm	X	X	X	X	T1A63AA
HP Combination Standard Cable Lock		X	X	X	T0Y15AA
HP Essential Combination Lock		X	X	X	T0Y16AA

I/O Devices	Mini	SFF	TWR	AiO	Part Number
HP DisplayPort 2.1 Flex IO v3	X	X	X		B6BS8AA
HP VGA Flex IO v3	X	X	X		B6BT0AA
HP HDMI 2.1 Flex IO v3	X	X	X		B6BS9AA
HP Thunderbolt 4™ Flex IO v3	X	X	X		B6BT1AA
HP USB-C 3.1 Gen2 Flex IO v3		X	X		B6BT3AA
HP Dual Type-C 3.2 Gen2 Flex IO v3	X	X	X		B6BT5AA
HP USB 3.2 Gen1 x2 Module Flex IO v2	X (Not Available on discrete GPU SKUs)	X	X		13L58AA
HP Internal Serial Port (in rear wall)		X	X		3TK82AA
HP PCIe x1 Parallel Port Card		X	X		N1M40AA
HP USB to Serial Port Adapter	X	X	X	X	J7B60AA
HP USB-C to DisplayPort Adapter G2	X			X	8Y8Y1AA
HP Single Mini Display Port Adapter to Display Port Adapter		X	X		2MY05AA
HP Serial Port Flex IO v2	X	X	X		5B895AA
HP Z2 2.5GbE LAN Flex Port	X				B96W7AA
HP Flex 1GbE Fiber LC Single Port	X	X	X		20J15AA

HP USB External DVD RW Drive	X	X	X	X	F2B56AA

NOTE: For more detail on HP I/O Devices please refer to the HP FLEX IO v3 Option Cards QuickSpecs:
https://www8.hp.com/h20195/v2/GetDocument.aspx?docname=c06712909

Mouse Pad	**Mini**	**SFF**	**TWR**	**AiO**	**Part Number**
HP 105 Sanitizable Mouse Pad	X	X	X	X	8X595AA

Communication Devices	**Mini**	**SFF**	**TWR**	**AiO**	**Part Number**
Intel® EthernetI226-T1 2.5GbE NIC		X	X		9P1U8AA

Change Log

Date	Version History	Action	Description of Change
May 21, 2025	From v1 to v2	Update	AiO weight and dimensions, Stands and dimensions and display panel specifications sections corrected
June 6, 2025	From v2 to v3	Update	Flex Io QS link updated in AMO / Weights and dimensions and Display panel specifications updated
June 19, 2025	From v3 to v4	Update	Packaging materials values for AiO 23 and 27 updated
June 25, 2025	From v4 to v5	Update	Back call out´s image Port flex 2 description corrected / Post-consumer recycled plastic used in system percentage corrected for MINI-TWR´s-AiO (23) / External power supply data corrected for MINI
July 24, 2025	From v5 to v6	Update	HP Endpoint Security Controller (ESC) Gen5 added to Sec Features in SW section / All M.2 2280 PCIe NVMe SSD´s interface corrected to PCIE Gen4x4
July 25, 2025	From v6 to v7	Update	HP Protect and Trace added to Security features in SW section
July 31, 2025	From v7 to v8	Update	“Native” Thunderbolt 4 corrected to “Optional” in Graphics specs table for Elite Mini. / PCI Express 5.0 x16 removed from SFF in Ports section
August 5, 2025	From v8 to v9	Correction	PCI Express 4.0 x16 added to Ports for SFF
August 11, 2025	From v9 to v10	Removal	2MY05AA removed from AiO and Mini at AMO section
August 14, 2025	From v10 to v11	Correction	3 SODIMM AMO skus (8/16/32GB) corrected
August 19, 2025	From v11 to v12	Update	HP Wolf Security for Business disclaimer in SW section updated
August 21, 2025	From v12 to v13	Addition	NVIDIA GeForce RTX 5060 graphic card added to Graphics section / 12GB (1x12GB) and 24GB (1x24GB) added in Memory conf. table
September 3, 2025	From v13 to v14	Update	13L58AA description updated to 3.2 and B96W7AA check for Mini in AMO section
September 19, 2025	From v14 to v15	Update	Footnote 1 in page 2 updated
September 22,2025	From v15 to v16	Update	UEFI Self Certification ADDED
September 23, 2025	From v16 to v17	Update	20% recycled glass used in display panels added to AiO environmental tables Sustainable Impact Specifications row / RJ45 corrected to RJ-45 in the whole doc and “Integrated” added to Intel® I219-LM
October 13, 2025	From v17 to v18	Addition	Footnotes 2 and 3 added to back call out images for SFF and TWR
October 15, 2025	From v18 to v19	Addition	NVIDIA® GeForce® RTX 5050 added to Graphics sections and back call outs for MINI
November 20, 2025	From v19 to v20	Update	Input and Security devices tables updated and Mouse Pad added to AMO section
December 1, 2025	From v20 to v21	Update	BJ3M6AA, BJ3M8AA, BJ3M7AA Added to Storage in AMO section
December 3, 2025	From v21 to v22	Update	MINI,SFF and TWRs Energy Consumption and Heat Dissipation values in Environmental data tables updated.
December 15, 2025	From v22 to v23	Update	New note to Wireless table in N&C section / SFF and TWR for 280W at 230V from Gold to Platinum in Power section
January 12, 2026	From v23 to v24	Update	175 wired/wireless and 275 wireless Mice and Kb´s added to I/O Dev
January 22, 2026	From v24 to v25	Update	GeForce® RTX 5060 Ti added to Graphic Cards
March 11, 2026	From v25 to v26	Correction	Tower 800/880 naming corrected to G1i in Audio/Multimedia section
May 27, 2026	From v26 to v27	Addition	Gen5 Solid State Drives added
July 16, 2026	From v28 to v29	Correction	Back call outs images updated for SFF and TWR
July 31, 2026	From v29 to v30	Update	DDR5-5600 SODIMM checked on for SFF
September 1, 2026	From v30 to v31	Addition	HP 375 Secure Smartcard Keyboard added
September 13, 2026	From v31 to v32	Update	USB Business Slim v2 table updated
October 6,2026	From v32 to v33	Update	HEVC updated to HEVC (H.265)

© Copyright 2026 HP Development Company, L.P.
The Information contained herein is subject to change without notice. The only warranties for HP products are set forth in the express limited warranty statements accompanying such products. Nothing herein should be construed as constituting an additional warranty. HP shall not be liable for technical or editorial errors or omissions contained herein. Microsoft and Windows are registered trademarks or trademarks of Microsoft Corporation in the U.S. and/or other countries. intel, Celeron, Core, Pentium are registered trademarks or trademarks of intel Corporation in the U.S. and/or other countries. Bluetooth® is a trademark of Its proprietor, used by HP, inc. under license. USB Type-C® and USB-C® are trademarks of USB implementers Forum. NVIDIA, GeForce and NVS are trademarks and/or registered trademarks of NVIDIA Corporation in the U.S. and other countries. AMD and Radeon are trademarks of Advanced Micro Devices, inc. ENERGY STARIs a registered trademark owned by the U.S. Environmental Protection Agency. DisplayPort™ and the DisplayPort™ logo are trademarks owned by the Video Electronics Standards Association (VESA®) In the United States and other countries