Join the pro squad with the 27" G-Master Red Eagle, delivering stunning QHD resolution and a blistering 200Hz refresh rate.

Gain the competitive edge you need to unlock your full gaming potential with the 27" G2771QS monitor with WQHD (2560x1440) resolution. Featuring an ultra-fast 0.5ms MPRT and a 200Hz refresh rate, this monitor ensures smooth gameplay. Compatible with NVIDIA G-SYNC so you can make split second decisions and forget about ghosting effects or smearing issues. The ability to adjust brightness and the dark shades with the Black Tuner delivers greater viewing performance in shadowed areas and the IPS panel technology guarantees superb image quality.

Available also with height adjustable stand : G-Master GB2771HSU-B1 (1920x1080) , G-Master GB2771QSU-B1 (2560x1440) and G-Master GB2771UHSU-B1 (3840x2160)

QHD 1440p

Enjoy crystal-clear QHD resolution with vibrant detail, enhanced clarity, and more workspace for gaming, creative projects, and everyday use.

200Hz

With 200Hz refresh rate the force is with you! Make split second decisions and be sure the image on the screen is always sharp and smooth.

01 DISPLAY CHARACTERISTICS

Diagonal	27", 68.6cm
Panel	Fast IPS, haze 25%
Native resolution	2560 x 1440 @200Hz (3.7 megapixel WQHD, DisplayPort)
Aspect ratio	16:9
Panel brightness	350 cd/m²
Static contrast	1200:1
Advanced contrast	80M:1
Response time (MPRT)	0.5ms
Viewing zone	horizontal/vertical: 178°/178°, right/left: 89°/89°, up/down: 89°/89°
Colour support	1.07B 10bit (8bit + Hi-FRC)
Horizontal Sync	30 - 320kHz
Viewable area W x H	596.7 x 335.7mm, 23.5 x 23.5"
Pixel pitch	0.233mm
Frame Colour	matte, black

02 INTERFACES / CONNECTORS / CONTROLS

Signal input	HDMI x2 (v.2.0, max. 2560 x 1440 @144Hz) DisplayPort x1 (v.1.4, max. 2560 x 1440 @200Hz)
HDCP	yes
Headphone connector	yes

03 FEATURES

Blue light reducer	yes
Flicker free	yes
Adaptive Sync support	G-SYNC - 2560 x 1440 @48-200Hz, DisplayPort Only
Extra	i-Style Colour
HDR	HDR10 Ready
OSD languages	EN, DE, FR, ES, IT, PT, RU, JP, CZ, NL, PL, UA
Control buttons	power switch, joystick, menu (center), up / signal select, down / shortcut, left / volume -, right / volume +
User controls	picture adjust (contrast, brightness, OverDrive, HDR, Adaptive Sync, night mode, blue light reducer, Motion Blur Reducer, gamma), input select (input source, auto/ manual, DP, HDMI1, HDMI2), audio adjust (volume, mute), store user settings (user modes), colour settings (6-axis, colour temperature, user preset, black tuner), image adjust (i-Style Colour, X-Res Technology, sharpness, HDMI range, Direct Drive Mode, video mode adjust), language, OSD setup menu (OSD H. position, OSD V. position, OSD Time, Opening Logo, Power LED, DDC/ DI Control), display information, reset (reset all)
Speakers	2 x 2W
Convenience	Kensington-lock™ prepared, DDC/CI, DDC2B, Mac OSX

04 MECHANICAL

Display position adjustments	tilt
Tilt angle	21.5° up; 3.5° down
VESA mounting	100 x 100mm
Cable management system	yes

05 ACCESSORIES INCLUDED

Cables	power (1.8m), HDMI (1.8m), DP (1.8m)
Other	quick start guide, safety guide

06 POWER MANAGEMENT

Power supply unit	internal
Power supply	AC 100 - 240V, 50/60Hz
Power usage	21W typical, 0.5W stand by, 0.3W off mode

07 SUSTAINABILITY

Regulations	CE, TÜV-Bauart, EAC, PSE, RoHS support, ErP, WEEE, VCCI, REACH, UKCA
Energy efficiency class (Regulation (EU) 2017/1369)	E
REACH SVHC	above 0.1%: Lead

08 DIMENSIONS / WEIGHT

Product dimensions W x H x D	613.5 x 445.5 x 192.5mm
Box dimensions W x H x D	690 x 126 x 465mm
Weight (without box)	4.4kg
Weight (without stand)	3.9kg
Weight (with box)	6.6kg
EAN code	4948570126576

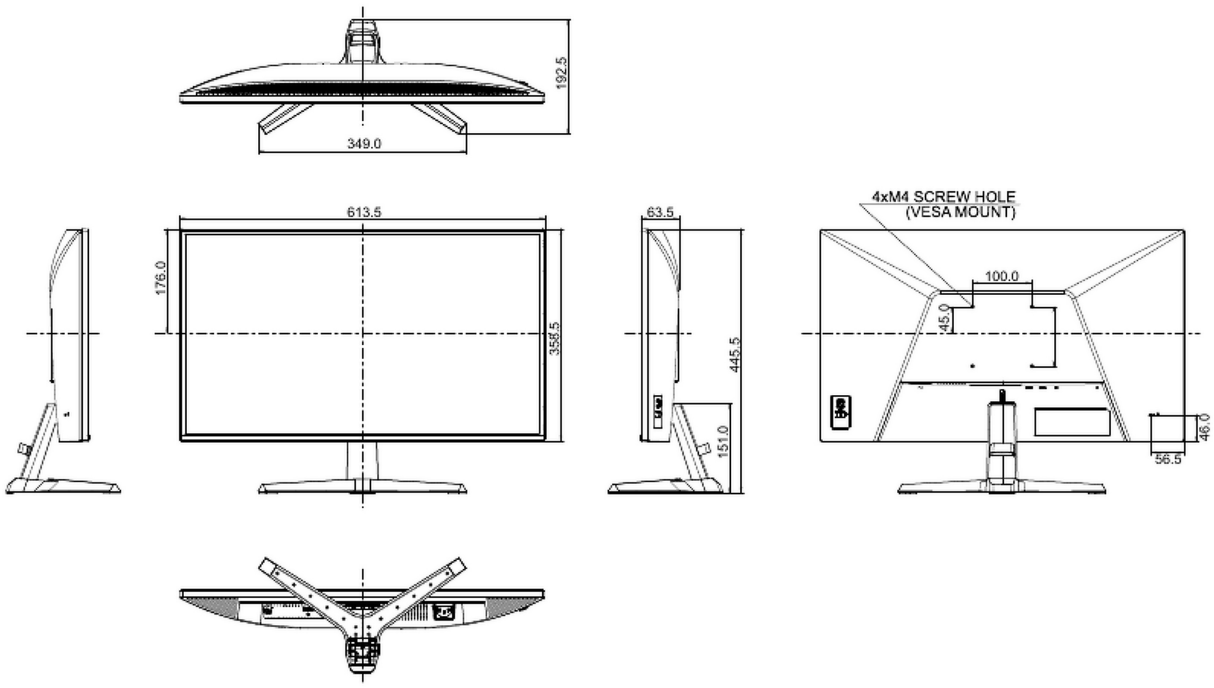

All trademarks and registered trademarks acknowledged. E & O E. Specification subject to change without notice. All LCD's comply with ISO-9241-307:2008 in connection with pixel defects.

© IIYAMA CORPORATION. ALL RIGHTS RESERVED