ProGraphic HB2701UHSNP-B1

DESKTOP MONITORS

INFORMATION

Precision meets performance

Work with confidence on the 27″ ProGraphic HB2701, a 4K UHD monitor engineered for designers, photographers, and content creators who demand uncompromising visual clarity.

Powered by IPS Black 2.0 technology, it delivers deeper contrast and richer blacks, ensuring every shadow and detail is revealed with stunning precision.

With 99% DCI-P3 coverage and Pantone Validated colour accuracy, your work translates seamlessly across print, video, and digital platforms. The AGLR anti-glare coating minimises reflections, keeping you focused whether you're in a bright studio or a dim workspace. These advanced features allow you to fully showcase your creativity and skills.

Designed for productivity, the HB2701 features a 150mm height-adjustable stand, USB-C docking, and a built-in KVM switch, giving you a clean, connected setup ready for effortless multitasking.

See more, adjust less

IPS Black 2.0 technology enhances contrast, deepens blacks, and delivers consistent colours across a broad viewing area. You'll catch more detail in shadowed regions and reduce the need for corrections, giving you full confidence during creative work.

Pantone Validated for reliable colour accuracy

ProGraphic monitors are Pantone Validated to ensure precise reproduction of Pantone Matching System colours widely used in design and print. This streamlines your workflow, minimizes revisions, and gives professionals across colour-critical fields the confidence to trust every hue.

Precision colour across every medium

With 99% coverage of the DCI-P3 colour space, ProGraphic monitors provide the accuracy needed for any visual project. Whether it’s digital content, print, or film, your work looks exactly how you intended so your audience sees what you see.

Enhanced contrast for sharper decisions

A 3000:1 contrast ratio allows ProGraphic monitors to expose subtle shadows and delicate tonal transitions. This means you see more of your image upfront, making editing and grading decisions easier and more accurate. No detail gets overlooked.

SPECIFICATION

01 DISPLAY CHARACTERISTICS

Design	4-side edge-to-edge
Diagonal	27", 68.5cm
Panel	IPS Black 2.0, matte finish
Native resolution	3840 x 2160 @60Hz (8.3 megapixel 4K UHD)
Aspect ratio	16:9
Panel brightness	450 cd/m²
Static contrast	3000:1
Advanced contrast	80M:1
Response time (GTG)	4ms
Viewing zone	horizontal/vertical: 178°/178°, right/left: 89°/89°, up/down: 89°/89°
Colour support	1.07B 8bit (DCI-P3 99%, sRGB: 100%; NTSC: 72%)
Horizontal Sync	30 - 140kHz
Viewable area W x H	596.7 x 335.7mm, 23.5 x 13.2"
Pixel pitch	0.155mm
Colour	matte, black

02 INTERFACES / CONNECTORS / CONTROLS

Signal input	HDMI x1 (v.2.0) DisplayPort x1 (v.1.2) USB-C x1 (PD 96W)
Signal output	DisplayPort x1 (Daisy Chain MST max. 3840 x 2160)
USB HUB	x4 (3x v.3.2 Gen 1 (5Gbps, 4.5W) 1x Type C (5Gbps, 15W))
USB-C DOCK	x1 (Power delivery 96W, LAN, DP out, (not supported on MAC) USB v.3.2 (Gen 1, 5Gbit))
HDCP	yes
Headphone connector	yes
RJ45 (LAN)	x1

03 FEATURES

KVM switch	yes
Blue light reducer	yes
Flicker free	yes
Extra	Delta E <2.0, EyeComfort, Low Blue Light Panel, Eyesafe® Certified, Pantone ValidatedTM, AGLR Polarizer (anti-glare low reflective)
HDR	HDR400
OSD languages	EN, DE, FR, ES, IT, RU, JP, CZ, NL, PL, UA
Control buttons	Joystick/Power: Up/Input Select, Down/Shortcut, Right/Shortcut, Left/Shortcut

User controls	picture adjust (contrast, brightness, uniformity, ACR, Eco, OD, gamma), colour settings (HDR, 6-axis, i-Style colour, colour space, RGB range, colour temp., user preset), PiP/PbP (PiP/PbP, sub source, PiP position, PiP size, swap), OSD (H/ position, V. position, OSD time, OSD background, DDC/CI control, display information), language, recall (recall all), miscellaneous (sharpness, video mode adjust, smart power, USB charge, MST DP-out, USB-C speed, shortcut key, opening logo, power LED, Mac address, FW version), KVM (HDMI, DP, USB-C), input select (input select, DisplayPort mode), audio settings (volume, mute, audio input)
Speakers	2 x 2W
Convenience	Kensington-lock™ prepared, DDC/CI, DDC2B

04 MECHANICAL

Display position adjustments	height, swivel, tilt, pivot (rotation both sides)
Height adjustment	150mm
Rotation (PIVOT function)	90°
Swivel stand	360°; 180° left; 180° right
Tilt angle	23° up; 5° down
VESA mounting	100 x 100mm
Cable management system	yes

05 ACCESSORIES INCLUDED

Cables	power (1.8m), USB (1.8m), HDMI (1.8m), DP (1.8m), USB-C (1.0m)
Other	quick start guide, safety guide

06 POWER MANAGEMENT

Power supply unit	internal
Power supply	AC 120 - 240V, 50/60Hz
Power usage	27W typical, 0.5W stand by, 0.3W off mode

07 SUSTAINABILITY

Regulations	TCO Certified, CE, TÜV-GS, EAC, VCCI-B, PSE, RoHS support, ErP, WEEE, REACH, UKCA
Energy efficiency class (Regulation (EU) 2017/1369)	G
EPEAT Silver	registration varies by country, go to www.epeat.net for details
REACH SVHC	above 0.1%: Lead

08 DIMENSIONS / WEIGHT

Product dimensions W x H x D	614 x 404 (544) x 224.5mm

Box dimensions W x H x D	688 x 463 x 138mm
Weight (without box)	6.7kg
Weight (with box)	9.7kg
EAN code	4948570125401

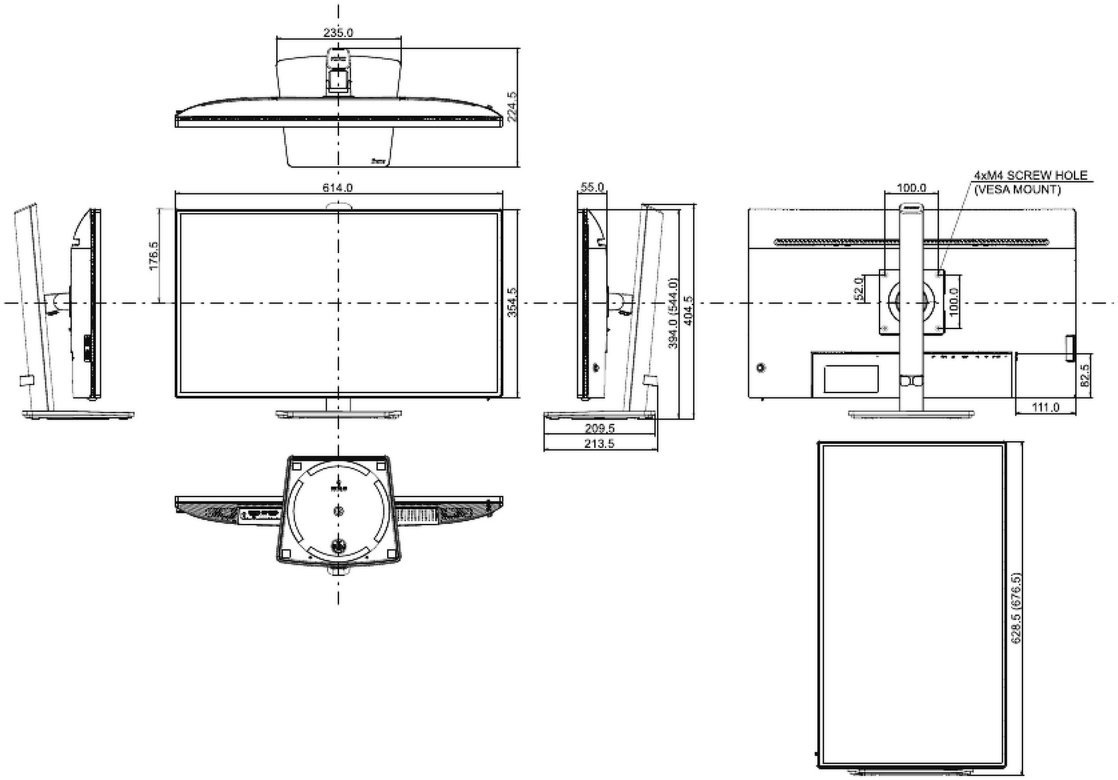

GALLERY

All trademarks and registered trademarks acknowledged. E & O E. Specification subject to change without notice. All LCD's comply with ISO-9241-307:2008 in connection with pixel defects. **© IIYAMA CORPORATION. ALL RIGHTS RESERVED**