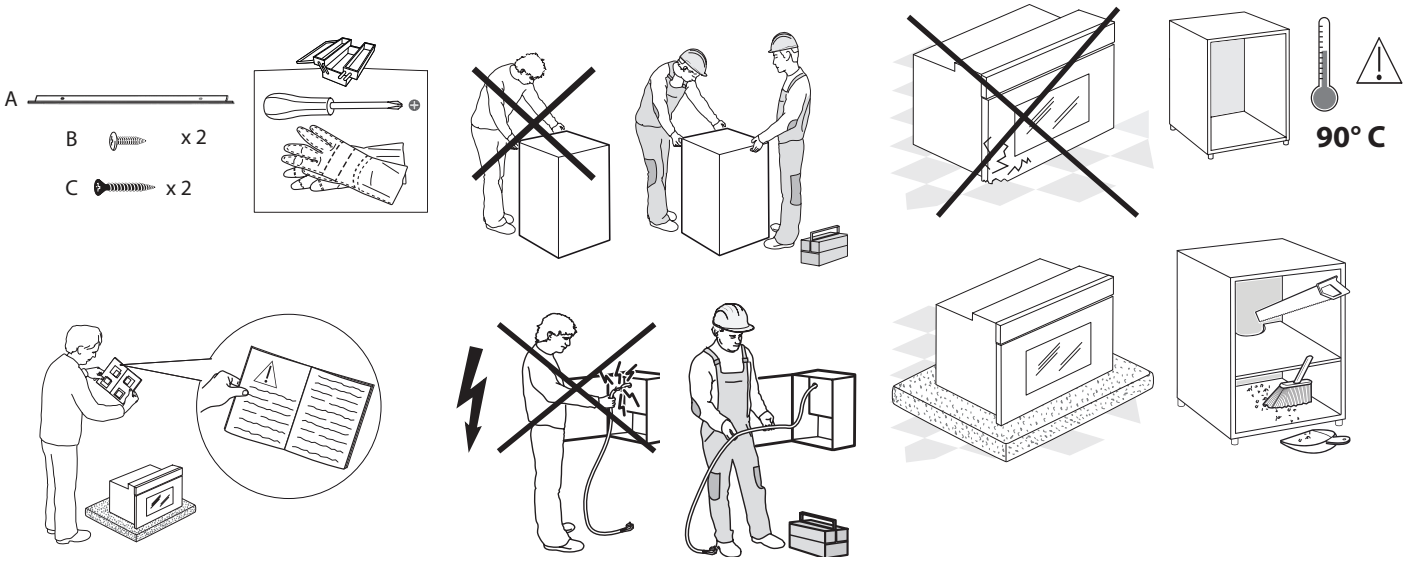
A
B x 2
C x 2
90° C

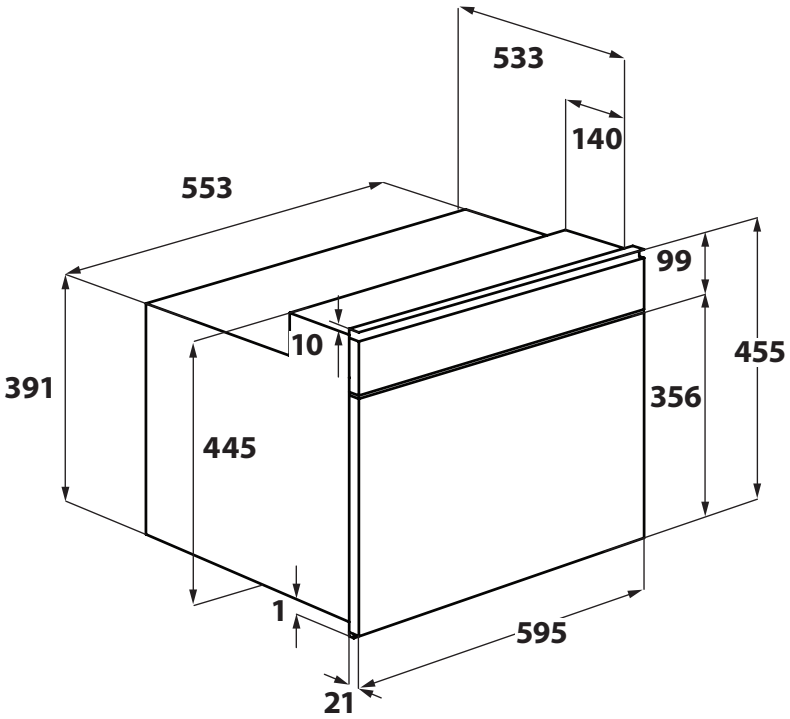
533
140
553
99
10
391
455
356
445
1
595
21

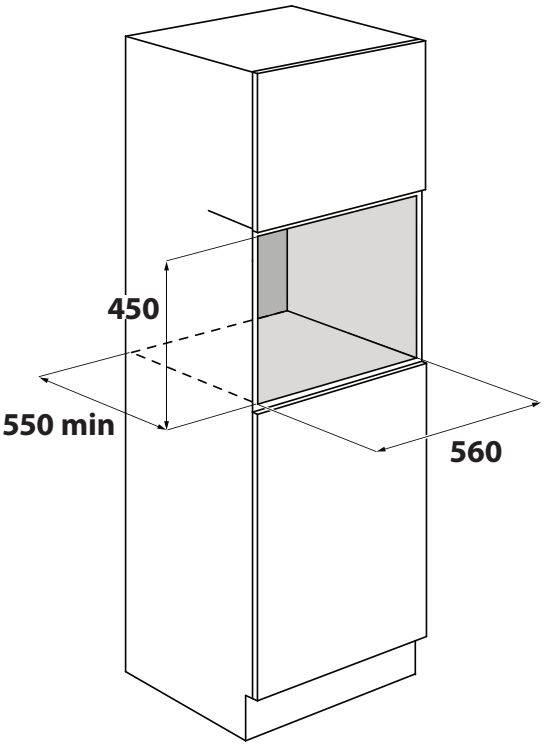
450
550 min
560

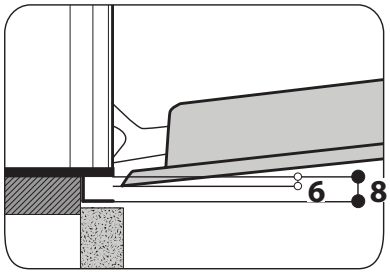
6
8

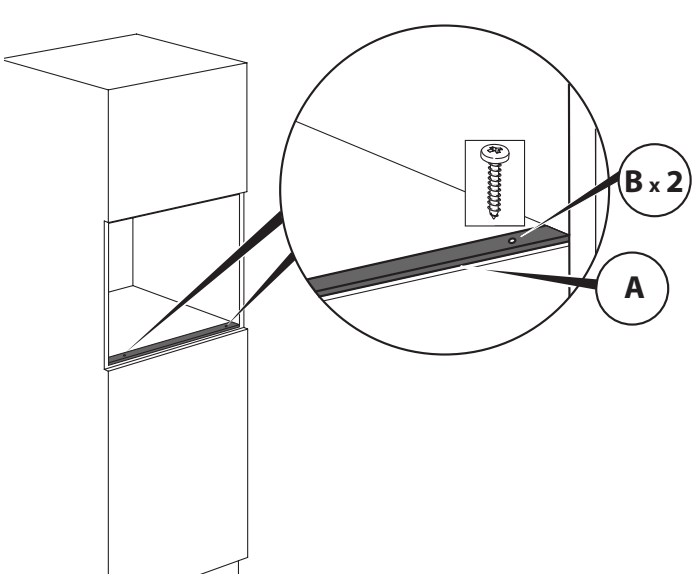
B x 2
A

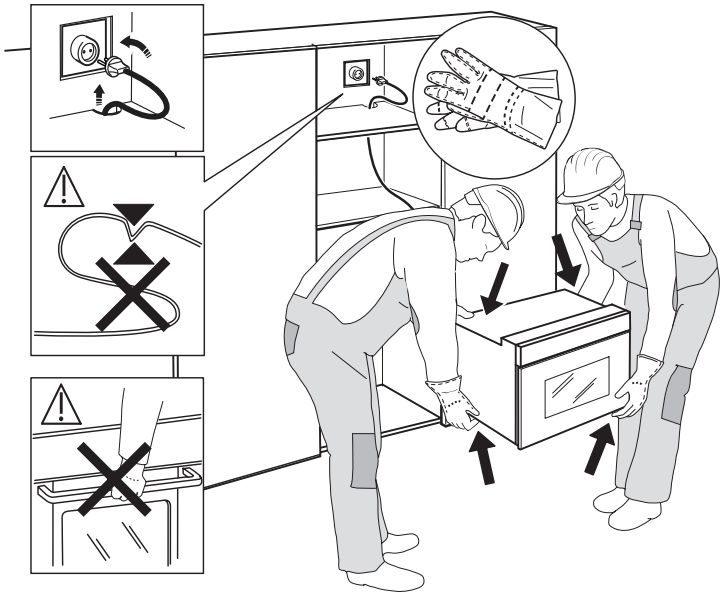

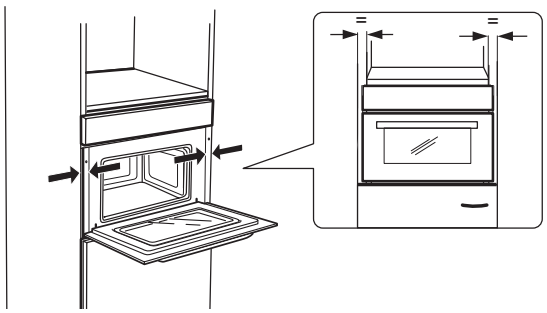

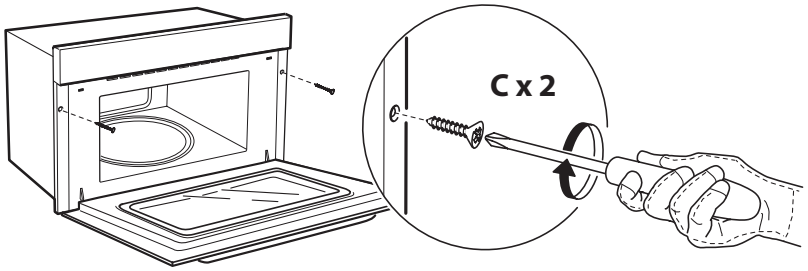
C x 2

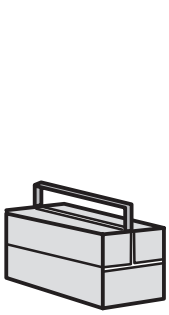

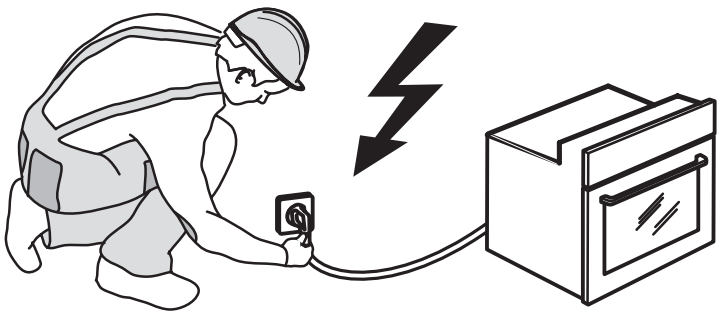

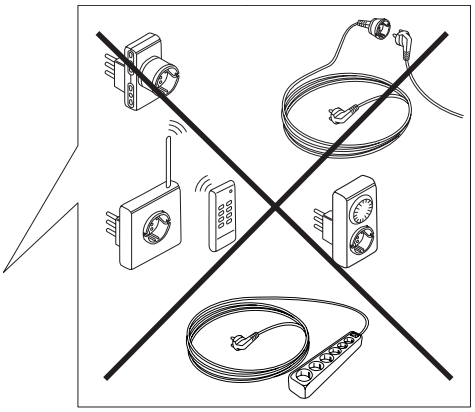

EN
SAFETY INSTRUCTIONS

IMPORTANT TO BE READ AND OBSERVED

Before using the appliance, read these safety instructions. Keep them nearby for future reference.

These instructions and the appliance itself provide important safety warnings, to be observed at all times. The manufacturer declines any liability for failure to observe these safety instructions, for inappropriate use of the appliance or incorrect setting of controls.

⚠ Very young children (0-3 years) should be kept away from the appliance. Young children (3-8 years) should be kept away from the appliance unless continuously supervised. Children from 8 years old and above and persons with reduced physical, sensory or mental capabilities or lack of experience and knowledge can use this appliance only if they are supervised or have been given instructions on safe use and understand the hazards involved. Children must not play with the appliance. Cleaning and user maintenance must not be carried out by children without supervision.

⚠ WARNING: When the appliance is operated in the combination mode, children should only use the oven under adult supervision due to the temperatures generated.

⚠ WARNING: The appliance and its accessible parts become hot during use. Care should be taken to avoid touching heating elements. Children less than 8 years of age must be kept away unless continuously supervised.

⚠ Never leave the appliance unattended during food drying. If the appliance is suitable for probe usage, only use a temperature probe recommended for this oven - risk of fire.

⚠ Keep clothes or other flammable materials away from the appliance, until all the components have cooled down completely - risk of fire. Always be vigilant when cooking foods rich in fat, oil or when adding alcoholic beverages - risk of fire. Use oven gloves to remove pans and accessories. At the end of cooking, open the door with caution, allowing hot air or steam to escape gradually before accessing the cavity - risk of burns. Do not obstruct hot air vents at the front of the oven - risk of fire.

⚠ Exercise caution when the oven door is in the open or down position, to avoid hitting the door.

⚠ WARNING: If the door or door seals are damaged, the oven must not be operated until it has been repaired – risk of injury.

⚠ WARNING: Liquids and foods must not be heated in sealed containers – risk of explosion, heating of beverages can result in delayed eruptive boiling, care must be taken when handling the container – risk of burn.

⚠ The microwave oven is intended for heating food and beverages. Do not dry food or clothing or heat warming pads, slippers, sponges and similar - risk of fire. When heating food in plastic or paper containers, remains vigilant on the oven - risk of fire.

⚠ After heating baby food or liquids in a baby bottle or a safe microwave cup, always shake, stir and check the temperature before service. This will ensure that the heat is evenly distributed and avoid the risk of scalding or burns.

⚠ The contents of feeding bottles and baby food jars must be stirred or shaken and their temperature checked - risk of burn. Do not heat eggs in their shells and whole hard-boiled eggs - risk of explosion.

⚠ Only use utensils that are suitable for microwave cooking. Do not use metallic containers - risk of injury.

⚠ Only use a temperature probe recommended for this oven - risk of fire.

⚠ If smoke is emitted switch off or unplug the appliance and keep the door closed in order to stifle any flames.

⚠ If the appliance is installed 850 mm or more above the floor, take care not to displace the turntable when removing containers – risk of injury.

⚠ Do not use your microwave oven for deep-frying, because the oil temperature can not be controlled.

⚠ Metallic containers for food and beverages are not suitable during microwave cooking.

⚠ Do not remove the microwave inlet protection plates on the side of the cavity walls (certain models only). They prevent grease and food particles from entering the microwave inlet channels.

PERMITTED USE

⚠ CAUTION: The appliance is not intended to be operated by means of an external switching device, such as a timer, or separate remote controlled system.

⚠ This appliance is intended to be used in household and similar applications such as: staff kitchen areas in shops, offices and other working environments; farm houses; by clients in hotels, motels, bed & breakfast and other residential environments.

⚠ No other use is permitted (e.g. heating rooms).

⚠ This appliance is not for professional use. Do not use the appliance outdoors.

⚠ Do not store explosive or flammable substances (e.g. gasoline or aerosol cans) inside or near the appliance - risk of fire.

INSTALLATION

⚠ The appliance must be handled and installed by two or more persons - risk of injury. Use protective gloves to unpack and install - risk of cuts.

⚠ Installation, including water supply (if any), electrical connections and repairs must be carried out by a qualified technician. Do not repair or replace any part of the appliance unless specifically stated in the user manual. Keep children away from the installation site. After unpacking the appliance, make sure that it has not been damaged during transport. In the event of problems, contact the dealer or your nearest After-sales Service. Once installed, packaging waste (plastic, styrofoam parts etc.) must be stored out of reach of children - risk of suffocation. The appliance must be disconnected from the power supply before any installation operation - risk of electrical shock. During installation, make sure the appliance does not damage the power cable - risk of fire or electrical shock. Only activate the appliance when the installation has been completed.

⚠ Carry out all cabinet cutting works before fitting the appliance in the furniture and remove all wood chips and sawdust.

⚠ Do not remove the appliance from its polystyrene foam base until the time of installation.

⚠ After installation, the bottom of the appliance must no longer be accessible - risk of burn.

⚠ Do not install the appliance behind a decorative door - risk of fire.

⚠ If the appliance is installed under the worktop, do not obstruct the minimum gap between the worktop and the upper edge of the oven - risk of burns.

⚠ This appliance is intended to be used built-in. Do not use it freestanding or place into a cabinet.

After unpacking the appliance, make sure that the appliance door closes properly. In the event of problems, contact the dealer or your nearest After-sales Service.

ELECTRICAL WARNINGS

⚠ The rating plate is on the front edge of the oven (visible when the door is open).

⚠ It must be possible to disconnect the appliance from the power supply by unplugging it if plug is accessible, or by a multi-pole switch installed upstream of the socket in accordance with the wiring rules and the appliance must be earthed in conformity with national electrical safety standards.

⚠ Do not use extension leads, multiple sockets or adapters. The electrical components must not be accessible to the user after installation. Do not use the appliance when you are wet or barefoot. Do not operate this appliance if it has a damaged power cable or plug, if it is not working properly, or if it has been damaged or dropped.

⚠ If the supply cord is damaged, it must be replaced with an identical one by the manufacturer, its service agent or similarly qualified persons in order to avoid a hazard - risk of electrical shock.

⚠ If the power cable needs to be replaced, contact an authorised service center.

CLEANING AND MAINTENANCE

⚠ WARNING: It is hazardous for anyone other than a competent person to carry out any service or repair operation that involves the removal of a cover which give protection against exposure to microwave energy.

⚠ Failure to maintain the oven in a clean condition could lead to deterioration of the surface that could adversely affect the life of the appliance and possibly result in a hazardous situation.

⚠ The oven must be cleaned regularly and any food deposits removed.

⚠ WARNING: Ensure that the appliance is switched off and disconnected from the power supply before performing any maintenance operation. To avoid risk of personal injury use protective gloves (risk of laceration) and safety shoes (risk of contusion); be sure to handle by two persons (reduce load); never use steam cleaning equipment (risk of electric shock). Non-professional repairs not authorised by the manufacturer could result in a risk to health and safety, for which the manufacturer cannot be held liable. Any defect or damage caused from non-professional repairs or maintenance will not be covered by the guarantee, the terms of which are outlined in the document delivered with the unit.

⚠ Regularly clean appliance door internal side and related gasket, without removing it. Use a soft sponge, mild water and neutral soap; dry using a neutral soft cloth. Do not use metal scrapers.

⚠ Do not use harsh abrasive cleaners or metal scrapers to clean the door glass since they can scratch the surface, which may result in shattering of the glass.

⚠ Make sure the appliance has cooled down before cleaning or performing maintenance. - risk of burns.

DISPOSAL OF PACKAGING MATERIALS

The packaging material is 100% recyclable and is marked with the recycle symbol ♻. The various parts of the packaging must therefore be disposed of responsibly and in full compliance with local authority regulations governing waste disposal.

DISPOSAL OF HOUSEHOLD APPLIANCES

This appliance is manufactured with recyclable or reusable materials. Dispose of it in accordance with local waste disposal regulations. For further information on the treatment, recovery and recycling of household electrical appliances, contact your local authority, the collection service for household waste or the store where you purchased the appliance. This appliance is marked in compliance with European Directive 2012/19/EU, Waste Electrical and Electronic Equipment (WEEE) and with the Waste Electrical and Electronic Equipment regulations

2013 (as amended). By ensuring this product is disposed of correctly, you will help prevent negative consequences for the environment and human health. The symbol on the product or on the accompanying documentation indicates that it should not be treated as domestic waste but must be taken to an appropriate collection center for the recycling of electrical and electronic equipment.

DECLARATIONS OF CONFORMITY

This appliance is in compliance with the European standard EN 60705.

The information related to low power mode of the appli-ance in accordance with Regulation (EU) 2023/826 can be found in the following link:
https://docs.emeaappliance-docs.eu

This product contains a light source of energy efficiency class G.

The Manufacturer, Whirlpool Management EMEA s.r.l., declares that this W9I MW261 N model of household appliance with radio equipment Tourmaline Wifi Module is in compliance with directive 2014/53/UE and Radio Equipment Regulations 2017.

The complete text of the declaration of conformity is present at the following website: docs.whirlpool.eu

The radio equipment operates in the 2.4 GHz ISM frequency band, the maximum radio-frequency power transmitted does not exceed 20 dBm (e.i.r.p.).

This product includes certain open source software developed by third parties. The open source license usage statement is available at the following website: docs.whirlpool.eu





400011720420/A