Online User's Guide

MFC-J3660DW
MFC-J3960DW
MFC-J6560DW
MFC-J6760DW
MFC-J6960DW
MFC-J6975DW
MFC-J6977DW

© 2025 Brother Industries, Ltd. All rights reserved.

Table of Contents

Before You Use Your Machine **1**
Definitions of Notes 2
Trademarks 3
Open Source Licensing Remarks 4
Copyright and License 5
Important Notes 6
Introduction to Your Machine **7**
Before Using Your Machine 8
Control Panel Overview 9
Touchscreen LCD Overview 12
Settings Screen Overview 15
Set the Ready Screen 17
Set Default Function Screens 18
Enter Text on Your Brother Machine 19
Access Brother Utilities (Windows) 20
Uninstall the Brother Software and Drivers (Windows) 21
Access Brother iPrint&Scan (Windows/Mac) 22
USB / Ethernet Port Locations on Your Brother Machine 23
Paper Handling **24**
Load Paper 25
Loading Paper Overview 26
Load Paper in Paper Tray #1 / Paper Tray #2 / Paper Tray #3 29
Load Paper in the Multi-purpose Tray (MP Tray) 44
Load Paper in the Manual Feed Slot 52
Unprintable Area 55
Paper Settings 56
Acceptable Print Media 61
Load Documents 68
Load Documents in the Automatic Document Feeder (ADF) 69
Load Documents on the Scanner Glass 71
Preset the Orientation of A4 or Letter Size Documents When Using Scanner Glass 72
Unscannable Area 73
Print **74**
Print from Your Computer (Windows) 75
Print a Photo (Windows) 76
Print a Document (Windows) 77
Print More Than One Page on a Single Sheet of Paper (N in 1) (Windows) 79
Print as a Poster (Windows) 80
Print on Both Sides of the Paper Automatically (Automatic 2-sided Printing) (Windows) 81
Print as a Booklet Automatically (Windows) 84
Secure Print (Windows) 86
Print a Colour Document in Greyscale (Windows) 87
Print on Long Paper (Windows) 88
Print on an Envelope (Windows) 89
Use a Preset Print Profile (Windows) 90

Change the Default Print Settings (Windows) ... 91
Printer Driver Settings (Windows) ... 92
Print from Your Computer (Mac) ... 96
Print Using Brother iPrint&Scan (Windows/Mac) ... 97
Print Photos or Documents Using Brother iPrint&Scan (Windows/Mac) ... 98
Print on Both Sides of the Paper Automatically Using Brother iPrint&Scan (Automatic 2-sided Printing) (Windows/Mac) ... 100
Print More Than One Page on a Single Sheet of Paper Using Brother iPrint&Scan (N in 1) (Windows/Mac) ... 102
Print a Colour Document in Greyscale Using Brother iPrint&Scan (Windows/Mac) ... 103
Print Data Directly from a USB Flash Drive ... 104
Print Photos Directly from a USB Flash Drive ... 105
Print a PDF File Directly from a USB Flash Drive ... 111
Print an Email Attachment ... 113
Universal Print ... 114
Universal Print Overview ... 115
Configure Universal Print ... 116
Add a Universal Print-enabled Printer to Your Computer ... 117
Deregister Your Machine from Universal Print ... 118
Cancel a Print Job ... 119
Scan ... 120
Scan Using the Scan Button on Your Machine ... 121
Configure the Scan Button on Your Machine ... 122
Scan Multi-page A4 or Letter Size Documents ... 123
Scan Photos and Graphics ... 124
Scan Documents as a Single PDF File ... 126
Save Scanned Data to a USB Flash Drive ... 128
Scan Multiple Business Cards and Photos (Auto Crop) ... 130
Scan to an Editable Text File Using OCR ... 131
Save Scanned Data as an Email Attachment ... 133
Send Scanned Data to an Email Recipient ... 135
Scan to FTP ... 137
Scan to SSH Server (SFTP) ... 141
Scan to Network (Windows) ... 148
Scan to SharePoint ... 152
Web Services for Scanning on Your Network (Windows) ... 156
Scan Using Brother iPrint&Scan (Windows/Mac) ... 160
Scan from Your Computer (Windows) ... 161
Scan Using Kofax PaperPort™ 14SE or Other Windows Applications ... 162
Scan Using Windows Fax and Scan ... 167
Scan from Your Computer (Mac) ... 171
Configure Scan Settings Using Web Based Management ... 172
Set the Scan File Name Using Web Based Management ... 173
Set the Scan Job Email Report Using Web Based Management ... 174
Copy ... 175
Copy a Document ... 176
Enlarge or Reduce Copied Images ... 178

Sort Copies ... 179
Make Page Layout Copies (N in 1 or Poster) ... 180
Copy on Both Sides of the Paper (2-sided Copy) ... 183
Copy an ID Card ... 186
Use the A3 Copy Shortcuts ... 188
Copy Settings ... 190
Fax ... 193
Initial Fax Setup and Telephone Services ... 194
Set Your Station ID ... 195
Set Tone or Pulse Dialling Mode ... 196
Set the Telephone Line Type ... 197
Voice Over Internet Protocol (VoIP/Telephone Line Interference) ... 199
Send a Fax ... 200
Send a Fax from Your Brother Machine ... 201
Send a Fax Manually ... 203
Send the Same Fax to More than One Recipient (Broadcasting) ... 204
Fax Options ... 206
Receive a Fax ... 207
Receive Mode Settings ... 208
Set Fax Detect ... 213
Fax Preview ... 214
Memory Receive Options ... 218
Fax Numbers ... 219
Store Address Book Numbers ... 220
Change or Delete Address Book Names or Numbers ... 221
Set up Broadcasting Groups ... 222
Fax Reports ... 223
Set the Transmission Verification Report's Style ... 224
Set the Fax Journal's Interval Period ... 225
External Devices ... 226
PC-FAX ... 227
I-Fax (Fax Using the Internet) ... 228
Network ... 229
Supported Basic Network Features ... 230
Configure Network Settings ... 231
Configure Network Settings Using the Control Panel ... 232
Wireless Network Settings ... 233
Use the Wireless Network ... 234
Use Wi-Fi Direct® ... 246
Enable/Disable Wireless LAN ... 250
Print the WLAN Report ... 251
Network Features ... 255
Print the Network Configuration Report ... 256
Configure the Proxy Server Settings Using Web Based Management ... 257
Configure and Operate LDAP Search ... 258
Synchronise Time with the SNTP Server Using Web Based Management ... 261
Forward Incoming Faxes to a Network Destination ... 264

Gigabit Ethernet (Wired Network Only) ... 267
Use Global Network Detection Features ... 268
Reset the Network Settings to Factory Default ... 271
Brother Management Tools ... 272
Security ... 273
Mobile/Web Connect ... 274
AirPrint ... 275
AirPrint Overview ... 276
Before Using AirPrint (macOS) ... 277
Print Using AirPrint ... 278
Scan Using AirPrint (macOS) ... 281
Send a Fax Using AirPrint (macOS) ... 282
Mopria™ Print Service and Mopria™ Scan ... 283
Brother Mobile Connect ... 284
Brother Web Connect ... 285
Brother Web Connect Overview ... 286
Online Services Used with Brother Web Connect ... 288
Set Up Brother Web Connect ... 290
Scan and Upload Documents Using Brother Web Connect ... 295
Upload a Document from an External Memory Device Using Brother Web Connect ... 296
Download and Print Documents Using Brother Web Connect ... 297
Download and Save a Document to an External Memory Device Using Brother Web Connect ... 298
FaxForward to Cloud or E-mail ... 299
Troubleshooting ... 301
Routine Maintenance ... 302
Replace the Ink Cartridges ... 303
Improve the Print Quality ... 306
Clean the Print Head from Your Brother Machine ... 307
Clean the Print Head Using Web Based Management ... 308
Clean the Print Head from Your Computer (Windows) ... 309
Automatically Detect and Improve the Condition of Print Head Nozzles ... 310
Correct the Paper Feed to Clear Vertical Lines ... 311
Change the Print Options to Improve Your Print Results ... 312
Check Your Brother Machine ... 313
Check the Machine Information ... 314
Check the Print Quality ... 315
Check the Print Alignment from Your Brother Machine ... 317
Check the Ink Volume (Page Gauge) ... 318
Monitor Machine Status Using Brother iPrint&Scan (Windows/Mac) ... 319
Clean Your Brother Machine ... 321
Clean the Scanner ... 322
Clean the ADF Document Sensor ... 324
Clean the Machine's LCD ... 325
Clean the Outside of the Machine ... 326
Clean the Machine's Printer Platen ... 328
Clean the Paper Feed Rollers ... 329
Clean the Base Pad ... 331

Clean the Paper Pick-up Rollers for Paper Tray #1 332
Clean the Paper Pick-up Rollers for Paper Tray #2 and Paper Tray #3 334
Update Your Machine's Firmware 335
Reset Your Machine 336
Reset Functions Overview 337
Reset Your Machine 338
Pack and Ship Your Machine 339
Machine Settings 341
Check Your Machine's Password 342
Change Machine Settings from the Control Panel 343
In the Event of Power Failure (Memory Storage) 344
General Settings 345
Save Your Favourite Settings as a Shortcut 352
Print Reports 358
Settings and Features Tables 361
Change Machine Settings Using Web Based Management 384
What is Web Based Management? 385
Access Web Based Management 387
Change the Login Password Using Web Based Management 390
Set Up Your Machine's Address Book Using Web Based Management 391
Appendix 392
Specifications 393
Supply Specifications 403
Environmental and Compliance Information 405
Information Regarding Recycled Paper 406
Availability of Service Parts 407
Chemical Substances (EU REACH) 408
Brother Help and Customer Support 409

Before You Use Your Machine

- Definitions of Notes
- Trademarks
- Open Source Licensing Remarks
- Copyright and License
- Important Notes

Definitions of Notes

We use the following symbols and conventions throughout this User's Guide:

WARNING	WARNING indicates a potentially hazardous situation which, if not avoided, could result in death or serious injuries.
CAUTION	CAUTION indicates a potentially hazardous situation which, if not avoided, may result in minor or moderate injuries.
IMPORTANT	IMPORTANT indicates a potentially hazardous situation which, if not avoided, may result in damage to property or loss of product functionality.
NOTE	NOTE specifies the operating environment, conditions for installation, or special conditions of use.
	Tips icons indicate helpful hints and supplementary information.
	Electrical Hazard icons alert you to possible electrical shock.
Bold	Bold style identifies buttons on the machine's control panel or computer screen.
Italics	Italicised style emphasises an important point or refers you to a related topic.
`Courier New`	Courier New font identifies messages shown on the machine's LCD.

Related Information

- Before You Use Your Machine

Trademarks

Apple, App Store, AirPrint, Mac, macOS, iPadOS, iPad, iPhone, iPod touch and Safari are trademarks of Apple Inc., registered in the U.S. and other countries.

Kofax and Kofax PaperPort are trademarks or registered trademarks of Tungsten Automation or its affiliates in the United States and/or other countries.

Wi-Fi®, Wi-Fi Alliance® and Wi-Fi Direct® are registered trademarks of Wi-Fi Alliance®.

WPA™, WPA2™, WPA3™, and Wi-Fi Protected Setup™ are trademarks of Wi-Fi Alliance®.

Android, Google Drive, Google Play and ChromeOS are trademarks of Google LLC. Use of these trademarks is subject to Google Permissions.

EVERNOTE is a trademark of Evernote Corporation and used under a license.

The Bluetooth® word mark is a registered trademark owned by Bluetooth SIG, Inc. and any use of such marks by Brother Industries, Ltd. is under license. Other trademarks and trade names are those of their respective owners.

Mopria™, the Mopria™ Logo, and the Mopria Alliance™ word mark and logo are registered and/or unregistered trademarks and service marks of Mopria Alliance, Inc. in the United States and other countries. Unauthorised use is strictly prohibited.

Linux® is the registered trademark of Linus Torvalds in the U.S. and other countries.

QR Code is a registered trademark of DENSO WAVE INCORPORATED.

Adobe® and Reader® are either registered trademarks or trademarks of Adobe Systems Incorporated in the United States and/or other countries.

Each company whose software title is mentioned in this manual has a Software Licence Agreement specific to its proprietary programs.

Software Trademarks

FlashFX® is a registered trademark of Datalight, Inc.

FlashFX® Pro™ is a trademark of Datalight, Inc.

FlashFX® Tera™ is a trademark of Datalight, Inc.

Reliance™ is a trademark of Datalight, Inc.

Reliance Nitro™ is a trademark of Datalight, Inc.

Datalight® is a registered trademark of Datalight, Inc.

Any trade names and product names of companies appearing on Brother products, related documents and any other materials are all trademarks or registered trademarks of those respective companies.

Related Information

- Before You Use Your Machine

Open Source Licensing Remarks

This product includes open-source software.

To view Open Source Licensing Remarks and Copyright Information, go to your model's **Manuals** page at support.brother.com/manuals.

Related Information

- Before You Use Your Machine

Copyright and License

©2025 Brother Industries, Ltd. All rights reserved.

This product includes software developed by the following vendors:

This product includes the “KASAGO TCP/IP” software developed by ZUKEN ELMIC, Inc.

Copyright 1989-2020 Datalight, Inc., All Rights Reserved.

FlashFX® Copyright 1998-2020 Datalight, Inc.

Related Information

- Before You Use Your Machine

Important Notes

- Check support.brother.com/downloads for Brother driver and software updates.
- To keep your machine performance up to date, check support.brother.com/downloads for the latest firmware upgrade. Otherwise, some of your machine's functions may not be available.
- Do not use this product outside the country of purchase as it may violate the wireless telecommunication and power regulations of that country.
- Before giving your machine to anyone else, replacing it, or disposing of it, we strongly recommend resetting it to its factory settings to remove all personal information.
- Windows 10 in this document represents Windows 10 Home, Windows 10 Pro, Windows 10 Education, and Windows 10 Enterprise.
- Windows 11 in this document represents Windows 11 Home, Windows 11 Pro, Windows 11 Education, and Windows 11 Enterprise.
- In this User's Guide, the LCD messages of the MFC-J6960DW are used unless otherwise specified.
- In this User's Guide, the illustrations of the MFC-J6960DW are used unless otherwise specified.
- The screens or images in this User's Guide are for illustration purposes only and may differ from those of the actual products.
- The screens in this manual may differ from the screens on your computer depending on your operating system.
- The contents of this document and the specifications of this product are subject to change without notice.

Related Information

- Before You Use Your Machine

Related Topics:

- Reset Your Machine

Introduction to Your Machine

- Before Using Your Machine
- Control Panel Overview
- Touchscreen LCD Overview
- Enter Text on Your Brother Machine
- Access Brother Utilities (Windows)
- Access Brother iPrint&Scan (Windows/Mac)
- USB / Ethernet Port Locations on Your Brother Machine

Before Using Your Machine

Before attempting any printing operation, confirm the following:

- Make sure you have installed the correct software and drivers for your machine.
- For USB or network cable users: Make sure the interface cable is physically secure.

Selecting the correct type of paper

For high quality printing, it is important to select the correct type of paper. Be sure to read the information about acceptable paper before buying paper, and to determine the printable area depending on the settings in the printer driver or in the application you use to print.

Simultaneous printing, scanning, and faxing

Your machine can print from your computer while sending or receiving a fax into memory or while scanning a document into the computer. Fax sending will not be stopped during printing from your computer. However, when the machine is copying or receiving a fax on paper, it pauses the printing operation, and then continues printing when copying or fax receiving has finished.

Firewall (Windows)

If your computer is protected by a firewall and you are unable to network print, network scan, or PC-FAX, you may need to configure the firewall settings. If you are using the Windows Firewall and you installed the drivers using the steps in the installer, the necessary firewall settings have been already set. If you are using any other personal firewall software, see the User's Guide for your software or contact the software manufacturer.

Related Information

- Introduction to Your Machine

Control Panel Overview

>> MFC-J3660DW/MFC-J6560DW/MFC-J6760DW
>> MFC-J3960DW/MFC-J6960DW/MFC-J6975DW/MFC-J6977DW

MFC-J3660DW/MFC-J6560DW/MFC-J6760DW

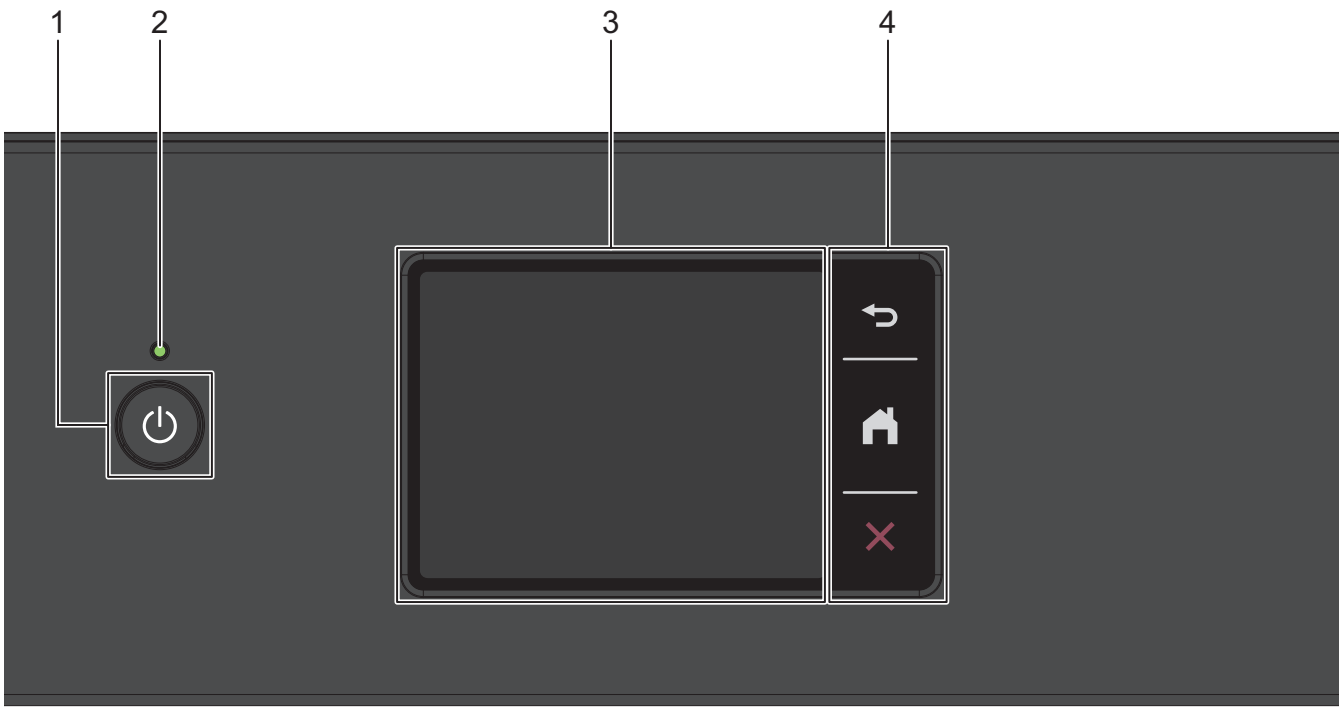

1. **Power On/Off**

   Press to turn the machine on.

   Press and hold to turn the machine off. The touchscreen displays `[Shutting Down]` and stays on for a few seconds before turning itself off. A connected external telephone or Telephone Answering Device (TAD) will always remain available.

   If you turn the machine off using , it will still clean the print head periodically to maintain print quality. To prolong print head life, provide better ink efficiency, and maintain print quality, keep your machine connected to a power source at all times.

2. **LED Power Indicator**

   The LED lights up depending on the machine's power status.

   When the machine is in Sleep Mode, the LED flashes.

3. **Touchscreen Liquid Crystal Display (LCD)**

   Access menus and options by pressing them on the touchscreen.

4. **Menu Buttons**

   (Back)

   Press to go back to the previous menu.

   (Home)

   Press to return to the Home screen.

(Cancel)

Press to cancel an operation.

MFC-J3960DW/MFC-J6960DW/MFC-J6975DW/MFC-J6977DW

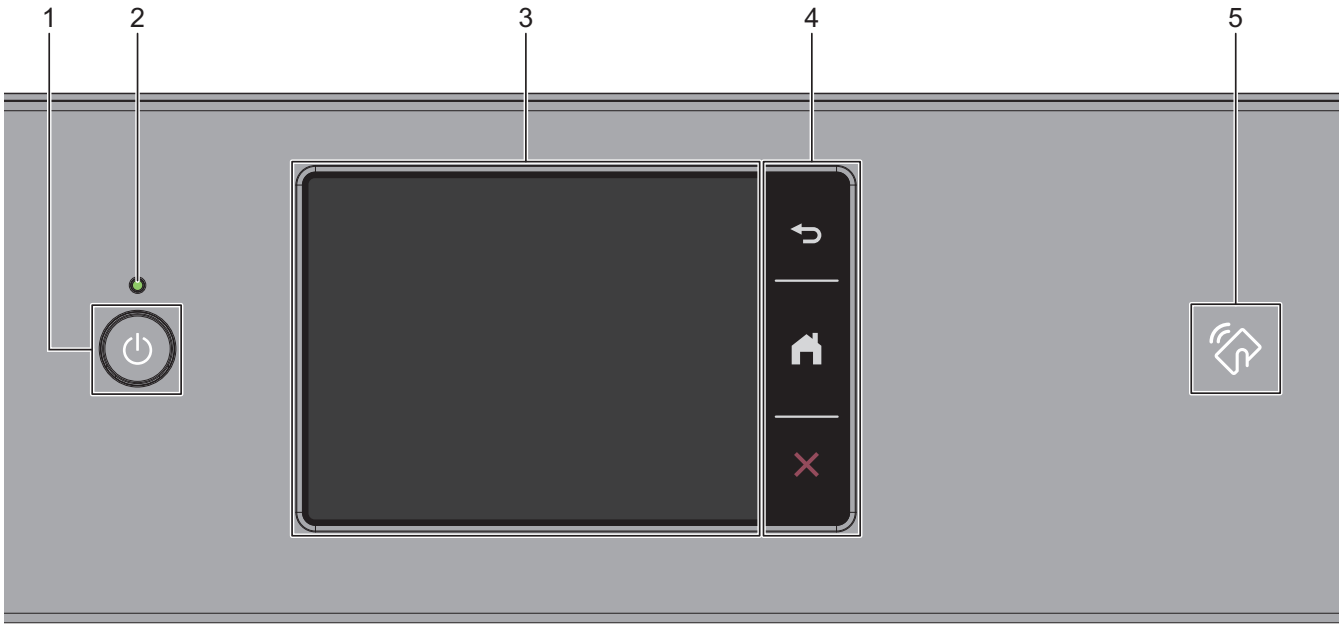

1. **Power On/Off**

   Press to turn the machine on.

   Press and hold to turn the machine off. The touchscreen displays `[Shutting Down]` and stays on for a few seconds before turning itself off. A connected external telephone or Telephone Answering Device (TAD) will always remain available.

   If you turn the machine off using , it will still clean the print head periodically to maintain print quality. To prolong print head life, provide better ink efficiency, and maintain print quality, keep your machine connected to a power source at all times.

2. **LED Power Indicator**

   The LED lights up depending on the machine's power status.

   When the machine is in Sleep Mode, the LED flashes.

3. **Touchscreen Liquid Crystal Display (LCD)**

   Access menus and options by pressing them on the touchscreen.

4. **Menu Buttons**

   (Back)

   Press to go back to the previous menu.

   (Home)

   Press to return to the Home screen.

   (Cancel)

   Press to cancel an operation.

5. **NFC (Near Field Communication) symbol**

   (MFC-J6975DW/MFC-J6977DW)

   You can use card authentication by touching the IC card to the NFC symbol on the control panel.

Related Information

- Introduction to Your Machine

Touchscreen LCD Overview

Using your finger, press ◀ ▶ or ▲ ▼ on the LCD to display and access the machine options.

(MFC-J3960DW/MFC-J6960DW/MFC-J6975DW/MFC-J6977DW) You can also access all machine options by swiping left, right, up, or down on the LCD to scroll through them.

You can switch Home screens by pressing ◀ or ▶.

From the Home screens, you can access the various settings.

Home Screen

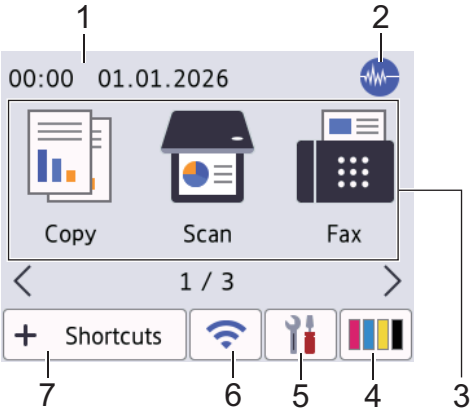

This screen shows the machine's status when the machine is idle. When displayed, it indicates that your machine is ready for the next command.

1. **Date & Time**

   Displays the date and time set on the machine.

2. **Quiet Mode**

   This icon appears when the `[Quiet Mode]` setting is set to `[On]`.

   The Quiet Mode setting can reduce printing noise. When Quiet Mode is turned on, the print speed becomes slower.

3. **Modes:**

   Press to switch to each mode.

   - `[Copy]`
   - `[Scan]`
   - `[Fax]`
   - `[Secure Print]` (MFC-J6975DW/MFC-J6977DW)
   - `[Web]`
   - `[Apps]`
   - `[USB]`
   - `[A3 Copy Shortcuts]`
   - `[Download Software]`
   - `[Print Head Cleaning]`

4. **`[Ink]`**

   Displays the approximate available ink volume. Press to access the `[Ink]` menu.

   When an ink cartridge is near the end of its life or having a problem, an error icon is displayed on the ink colour indicator.

5. **[Settings]**

   Press to access the [Settings] menu.

6. **Wireless Status**

   Each icon in the following table shows the wireless network status:

	The WLAN setting is disabled on your machine. Press this button to configure wireless settings. For more detailed information, see the *Quick Setup Guide*.
	The wireless network is connected. A three-level indicator in each of the Home screens displays the current wireless signal strength.
	Cannot connect to the wireless network using the configured wireless settings.
	The WLAN setting is enabled on your machine, but wireless settings are not configured.

You can configure wireless settings by pressing the Wireless Status button.

7. **[Shortcuts]**

   Create Shortcuts for frequently-used operations, such as scanning or copying.

- Three Shortcuts tabs are available with six Shortcuts on each tab.

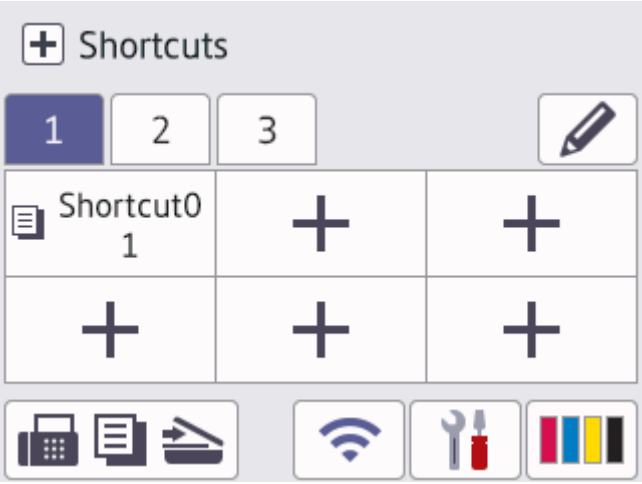

- Press , displayed at the bottom of the screen to access the Home Screens.

8. **Information icon**

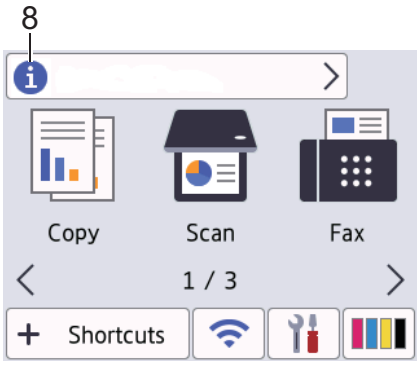

New details appear in the information bar when:

- [Message from Brother] is set to [On].
- The [Update Method] option for the [Firmware Update Setup] setting is set to [Auto Check].

(An internet connection is needed, and data rates may apply.)

Press to view the details.

9. **Warning icon**

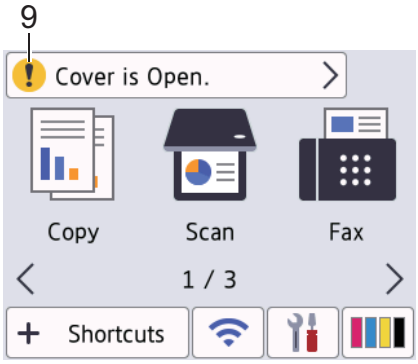

The warning icon appears when there is an error or maintenance message; press to view the details, and then press to return to the Home screen.

IMPORTANT

DO NOT press the LCD with a sharp object such as a pen or stylus. It may damage the machine.

NOTE

DO NOT touch the LCD immediately after plugging in the power cord or turning on the machine. Doing this may cause an error.

This product adopts the font of ARPHIC TECHNOLOGY CO., LTD.

Related Information

- Introduction to Your Machine
  - Settings Screen Overview
  - Set the Ready Screen
  - Set Default Function Screens

Related Topics:

- Reduce Printing Noise
- Check the Ink Volume (Page Gauge)
- Use the A3 Copy Shortcuts

Settings Screen Overview

The touchscreen shows the machine's status when you press [Settings].

Use the Settings menu to access all of your Brother machine's settings.

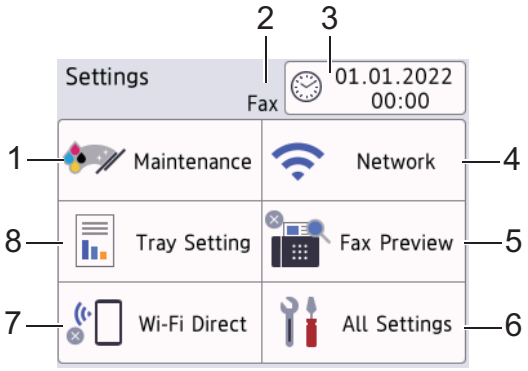

1. **[Maintenance]**

   Press to access the following menus:

   - [Improve Print Quality]
   - [Print Head Cleaning]
   - [Remove Paper Scraps]
   - [Ink Volume]
   - [Ink Cartridge Model]
   - [Print Options]
   - [Ink Cartridge Check]
   - [Print Quality Auto Check]

2. **Receive Mode**

   Displays the current Receive Mode.

3. **[Date & Time]**

   Displays the date and time.

   Press to access the [Date & Time] menu.

4. **[Network]**

   Press to set up a network connection.

   If you are using a wireless connection, a three-level indicator on the screen displays the current wireless signal strength.

5. **[Fax Preview]**

   Displays the Fax Preview setting.

   Press to access the [Fax Preview] menu.

6. **[All Settings]**

   Press to access a menu of all of your machine's settings.

7. **[Wi-Fi Direct]**

   Press to set up a Wi-Fi Direct network connection.

8. **[Tray Setting]**

   Press to access the [Tray Setting] menu.

   Use these options to change the paper size and type.

Related Information

- Touchscreen LCD Overview

Related Topics:

- Check the Ink Volume (Page Gauge)

Set the Ready Screen

You can change the Ready screen to display a specific Home screen or Shortcut screen.

When the machine is idle or you press , the machine will go back to the screen that you have set.

1. Press [Settings] > [All Settings] > [General Setup] > [Screen Settings] > [Home Screen].
2. Press ▲ or ▼ to display the screen options, and then select the option you want.
3. Press .

   The machine will go to your new Home screen.

Related Information

- Touchscreen LCD Overview

Set Default Function Screens

You can set the Scan default screen using the Screen Settings.

1. Press [Settings] > [All Settings] > [General Setup] > [Screen Settings] > [Scan Screen].
2. Press ▲ or ▼ to display the scan options, and then select the option you want to set as the default screen.
3. Press .

Related Information

- Touchscreen LCD Overview

Enter Text on Your Brother Machine

- The characters that are available may differ depending on your country.
- The keyboard layout may differ depending on the function you are setting.

When you need to enter text on your Brother machine, a keyboard will appear on the touchscreen.

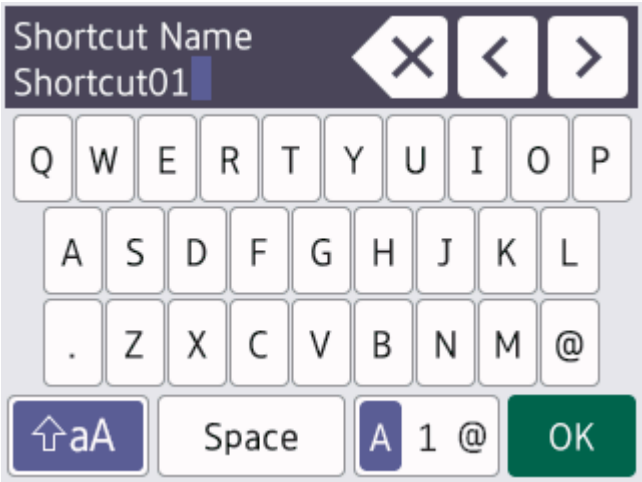

- Press A 1 @ to cycle between letters, numbers and special characters.
- Press aA to cycle between lowercase and uppercase letters.
- To move the cursor to the left or right, press ◀ or ▶.

Inserting spaces

- To enter a space, press `[Space]`. Or, you can press ▶ to move the cursor.

Making corrections

- If you entered an incorrect character and want to change it, press ◀ or ▶ to highlight the incorrect character. Press ⌫, and then enter the correct character.
- To insert a character, press ◀ or ▶ to move the cursor to the correct place, and then enter the character.
- Press ⌫ for each character you want to erase, or press and hold ⌫ to erase all the characters.

Related Information

- Introduction to Your Machine

Related Topics:

- Send the Same Fax to More than One Recipient (Broadcasting)
- Set Your Station ID
- Change or Delete Shortcuts

Access Brother Utilities (Windows)

Brother Utilities is an application launcher that offers convenient access to all Brother applications installed on your computer.

To use **Brother Utilities**, you must install the Brother software on your computer. To install the Brother software, go to your model's **Downloads** page at support.brother.com/downloads.

1. Do one of the following:
   - Windows 11

     Click > **All** > **Brother** > **Brother Utilities**.
   - Windows 10

     Click > **Brother** > **Brother Utilities**.
2. Select your machine.

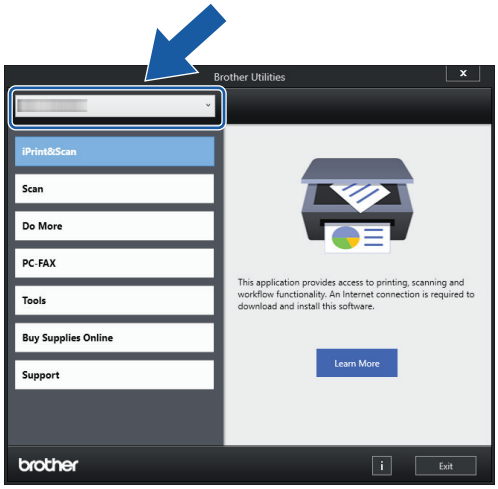

3. Select the operation you want to use.

Related Information

- Introduction to Your Machine
  - Uninstall the Brother Software and Drivers (Windows)

Uninstall the Brother Software and Drivers (Windows)

1. Do one of the following:
   - Windows 11

     Click > **All** > **Brother** > **Brother Utilities**.
   - Windows 10

     Click > **Brother** > **Brother Utilities**.
2. Click the drop-down list, and then select your model name (if not already selected). Click **Tools** in the left navigation bar, and then click **Uninstall**.

   Follow the instructions in the dialog box to uninstall the software and drivers.

Related Information

- Access Brother Utilities (Windows)

Access Brother iPrint&Scan (Windows/Mac)

Use Brother iPrint&Scan for Windows and Mac to print and scan from your computer.

- This function is not available in countries subject to applicable export regulations.
- **To download the latest version:**
  - For Windows:

    Go to your model's **Downloads** page at support.brother.com/downloads, and then download and install Brother iPrint&Scan.
  - For Mac:

    Download and install Brother iPrint&Scan from the Apple App Store.

  If prompted, install the driver and software necessary to use your machine. Download your machine's latest driver and software from your model's **Downloads** page at support.brother.com/downloads.

1. Start Brother iPrint&Scan.
   - Windows

     Double-click the (**Brother iPrint&Scan**) icon.
   - Mac

     In the **Finder** menu bar, click **Go** > **Applications**, and then double-click the iPrint&Scan icon.

   The Brother iPrint&Scan screen appears.

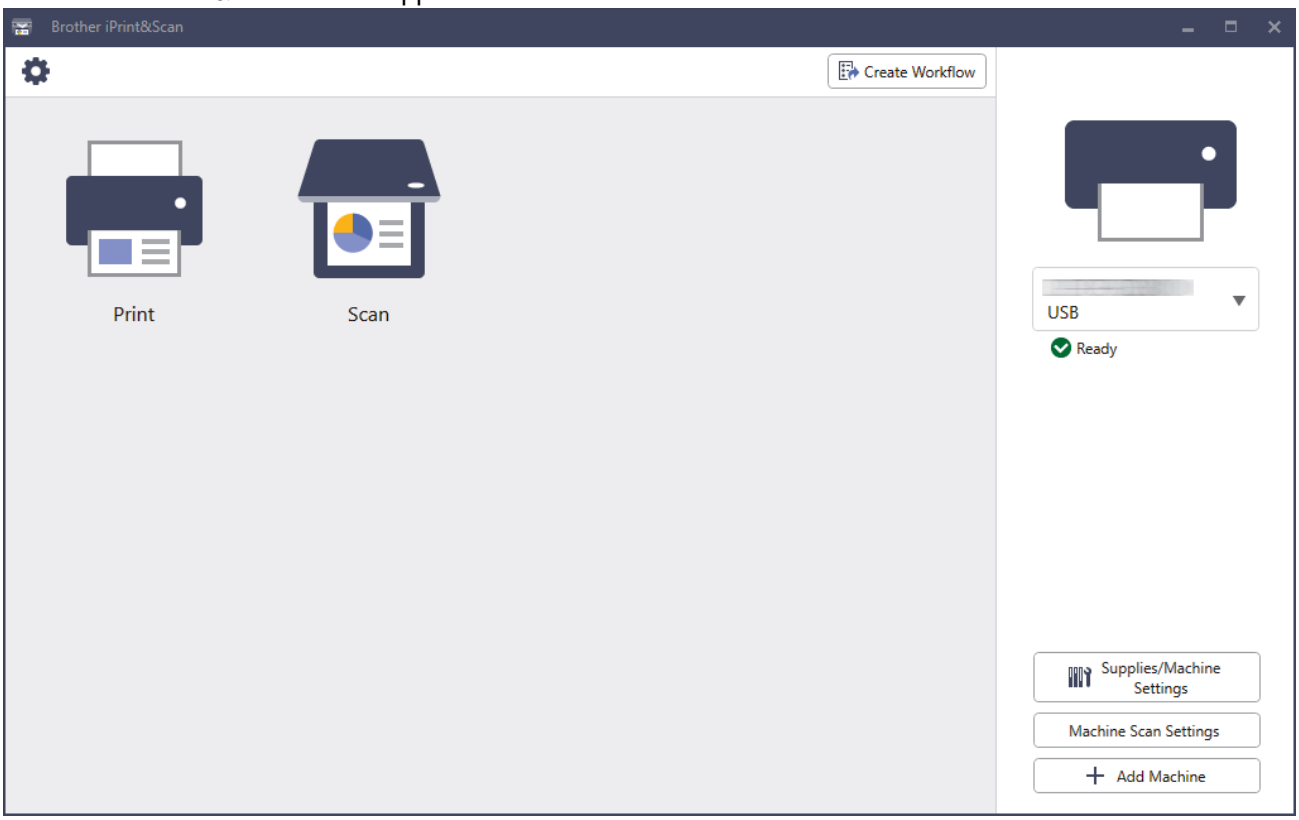

The actual screen may differ depending on the version of the application.

Related Information

- Introduction to Your Machine

USB / Ethernet Port Locations on Your Brother Machine

- For details on cables, see Interface Specifications.
- To install the driver and software necessary to use your machine, go to your model's **Downloads** page at support.brother.com/downloads.

The USB and Ethernet ports are located inside the machine.

1. Using both hands, use the finger holds on each side of the machine to lift the scanner cover (1) into the open position.

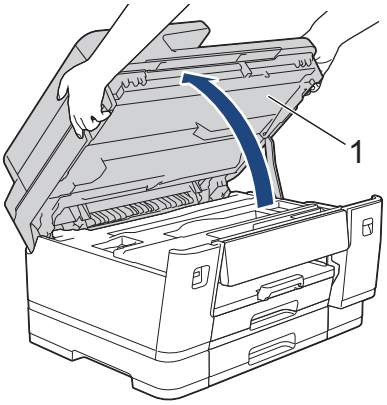

2. Locate the correct port (based on the cable you are using) inside the machine as shown.

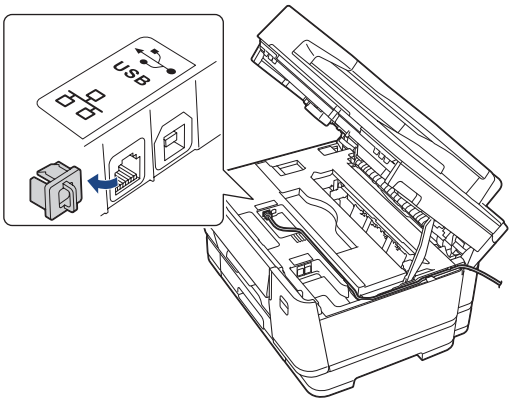

Carefully guide the cable through the cable channel and out the back of the machine.

3. Gently close the scanner cover using the finger holds on each side.

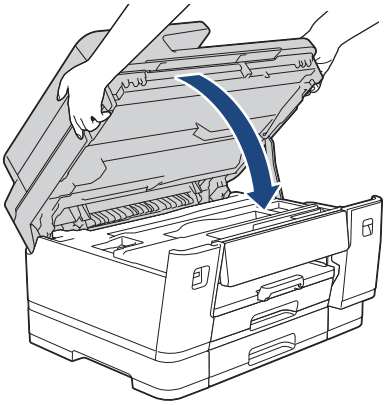

Related Information

- Introduction to Your Machine

Paper Handling

- Load Paper
- Load Documents

Load Paper

- Loading Paper Overview
- Load Paper in Paper Tray #1 / Paper Tray #2 / Paper Tray #3
- Load Paper in the Multi-purpose Tray (MP Tray)
- Load Paper in the Manual Feed Slot
- Unprintable Area
- Paper Settings
- Acceptable Print Media

Loading Paper Overview

1. Load the paper in the paper tray as follows.

Fan the stack of paper well.

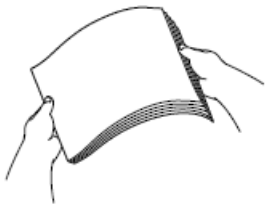

The paper size determines the orientation when loading paper.

Paper Tray

Tray #1	Tray #2 [1] Tray #3 [2]	How to Load Paper
A4 Letter Executive	A4 Letter (Plain paper and Recycled paper only)	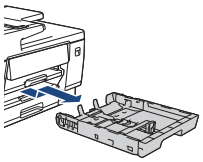 Adjust the paper guides. 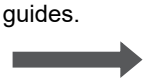 Landscape orientation 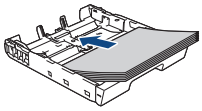
A5 A6 Photo Photo L Photo 2L Index card Envelopes	-	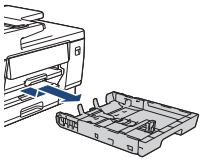 Adjust the paper guides. Portrait orientation 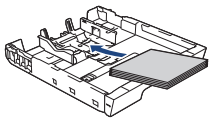
A3 Ledger Legal Folio Mexico Legal India Legal	A3 Ledger Legal Folio Mexico Legal India Legal (Plain paper and Recycled paper only)	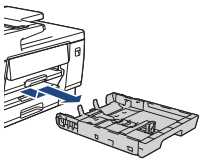 Extend the tray using the green slider, then adjust the paper guides. 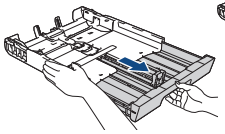 Portrait orientation 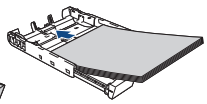

1 Tray #2 is available only for MFC-J3960DW/MFC-J6960DW/MFC-J6975DW/MFC-J6977DW.

2 Tray #3 is available only for MFC-J6977DW.

MP Tray

MP Tray [1]	How to Load Paper
A4 Letter Executive	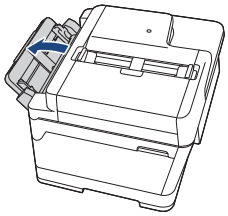 Adjust the MP tray paper guides. Landscape orientation 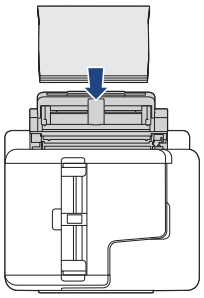
A3 Ledger Legal Folio Mexico Legal India Legal A5 [2] A6 [2] Photo Photo L Photo 2L Index card Envelopes Long Paper [3] [4]	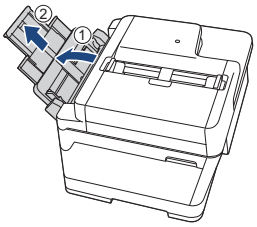 Adjust the MP tray paper guides. Portrait orientation 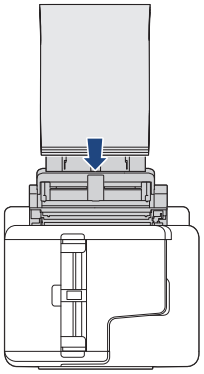

1 MP tray is available only for MFC-J3960DW/MFC-J6960DW/MFC-J6975DW/MFC-J6977DW.

2 When printing on A5 or A6 size plain paper using the MP tray, load one extra sheet of the same size paper in the tray.

3 Width: 88.9 - 297 mm / Height: 431.9 - 1200 mm.

4 Load only one sheet of Long paper into the MP tray at a time. To avoid damaging the paper, DO NOT pull up the paper support (2) when loading Long paper.

Manual Feed Slot

Manual Feed Slot [1] [2]	How to Load Paper
A4 Letter Executive	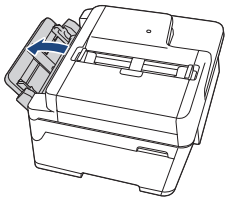 Adjust the manual feed slot paper guides. → Landscape orientation 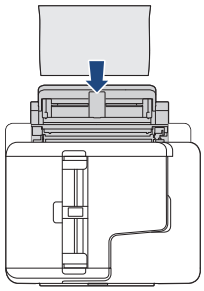
A3 Ledger Legal Folio Mexico Legal India Legal A5 A6 Photo Photo L Photo 2L Index card Envelopes	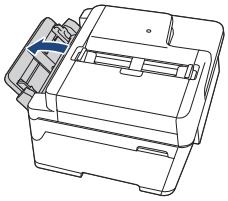 Adjust the manual feed slot paper guides. → Portrait orientation 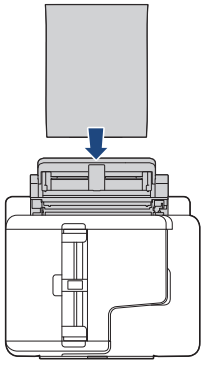

1 Manual Feed Slot is available only for MFC-J3660DW/MFC-J6560DW/MFC-J6760DW.
2 You can load only one sheet of paper into the manual feed slot at a time.

2. Unfold the paper support flap.

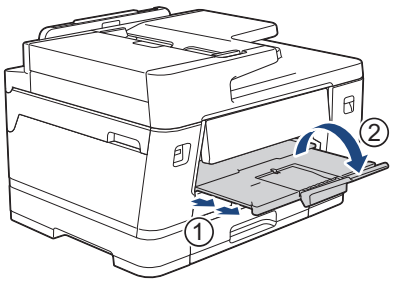

3. Change the paper size setting in the machine's menu, if needed.

Related Information

- Load Paper

Load Paper in Paper Tray #1 / Paper Tray #2 / Paper Tray #3

- Load A4, Letter, or Executive Size Paper in Paper Tray #1 / Paper Tray #2 / Paper Tray #3
- Load A3, Ledger, or Legal Size Paper in Paper Tray #1 / Paper Tray #2 / Paper Tray #3
- Load Photo Paper in Paper Tray #1
- Load Envelopes in Paper Tray #1

Load A4, Letter, or Executive Size Paper in Paper Tray #1 / Paper Tray #2 / Paper Tray #3

- If the `[Check Paper]` setting is set to `[On]` and you pull the paper tray out of the machine, a message appears on the LCD, allowing you to change the paper size and paper type.
- When you load a different paper size in the tray, you must change the Paper Size setting in the machine or the paper size setting on your computer.

  Doing this enables the machine to automatically feed paper from the appropriate tray if Auto Tray Select has been set in the printer driver (Windows) or on the machine. (MFC-J3960DW/MFC-J6960DW/MFC-J6975DW/MFC-J6977DW)
- You can use only plain paper in Tray #2. (MFC-J3960DW/MFC-J6960DW/MFC-J6975DW)
- You can use only plain paper in Tray #2 and Tray #3. (MFC-J6977DW)

These instructions describe how to load paper in Tray #1.

- (MFC-J3960DW/MFC-J6960DW/MFC-J6975DW) The steps for Tray #2 are very similar.
- (MFC-J6977DW) The steps for Tray #2 and Tray #3 are very similar.

1. If the paper support flap (1) is open, close it, and then close the paper support (2).

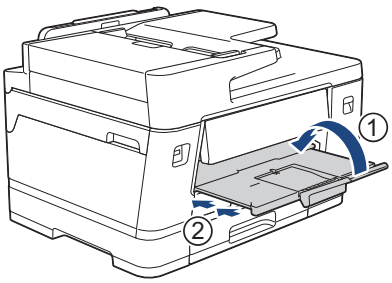

2. Pull the paper tray completely out of the machine as shown by the arrow.

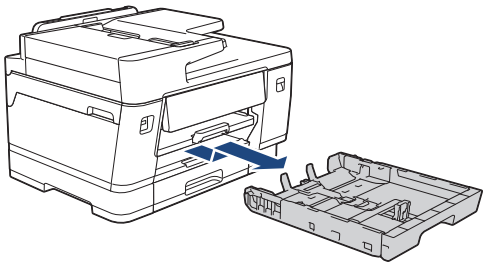

(MFC-J3960DW/MFC-J6960DW/MFC-J6975DW/MFC-J6977DW)

When you load paper in Tray #2 or Tray #3 (MFC-J6977DW), remove the tray top cover (1).

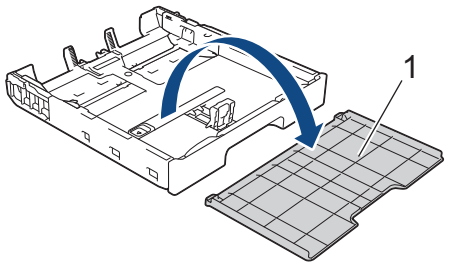

3. Gently press and slide the paper width guides (1) and then the paper length guide (2) to fit the paper size.

   Make sure the triangular mark (3) on the paper width guide (1) and paper length guide (2) line up with the marks for the paper you are using.

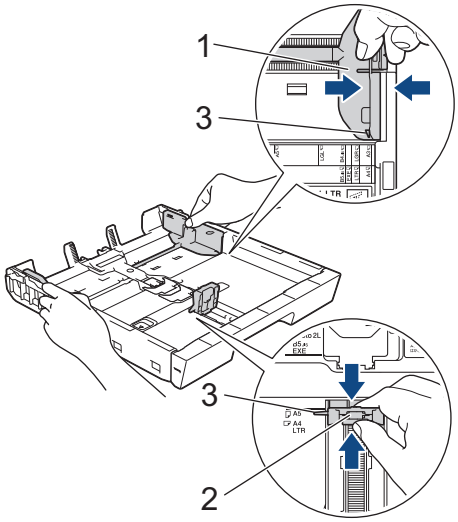

If you load Executive size paper in Tray #1, lift the stopper (4).

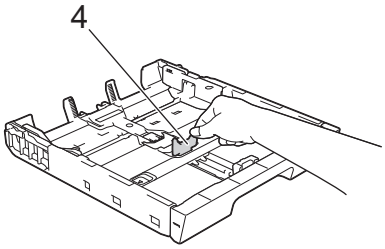

4. Fan the stack of paper well to avoid paper jams and misfeeds.

Always make sure the paper is not curled or wrinkled.

5. Gently load paper in the paper tray with the printing surface **face down**.

   Landscape orientation

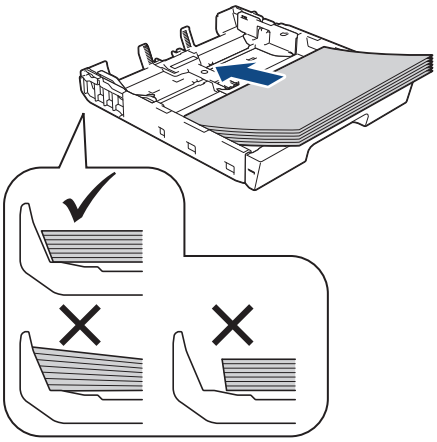

IMPORTANT

Be careful not to push the paper in too far; it may lift at the back of the tray and cause paper feed problems.

To add paper before the tray is empty, remove the paper from the tray and combine it with the paper you are adding. Always fan the stack of paper well to prevent the machine from feeding multiple pages.

6. Make sure the paper length guide (1) touches the edges of the paper.

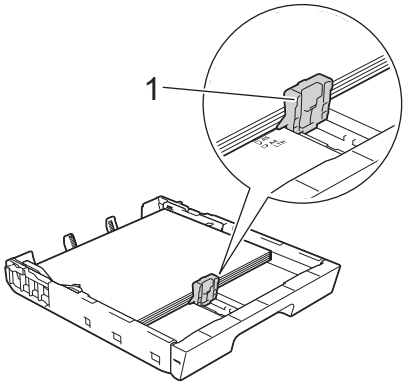

7. Gently adjust the paper width guides (1) to fit the paper.

   Make sure the paper guides touch the edges of the paper.

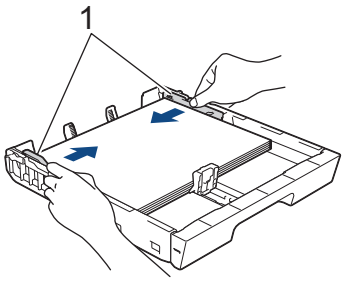

8. Make sure the paper is flat in the tray and below the maximum paper mark (1).

   Overfilling the paper tray may cause paper jams.

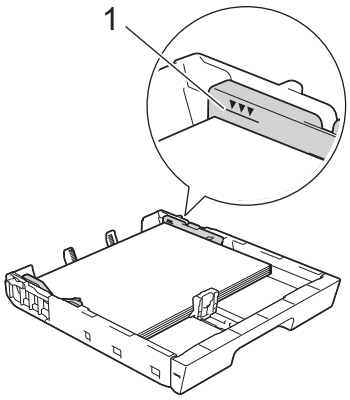

(MFC-J3960DW/MFC-J6960DW/MFC-J6975DW/MFC-J6977DW)

When you load paper in Tray #2 or Tray #3 (MFC-J6977DW), replace the tray top cover.

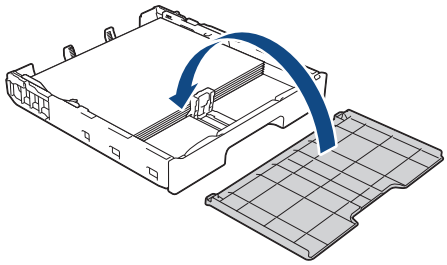

9. Slowly push the paper tray completely into the machine.

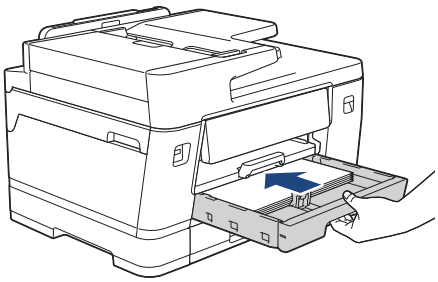

IMPORTANT

DO NOT push the paper tray into the machine forcefully or quickly. Doing this may cause paper jams or paper feed problems.

10. Pull out the paper support until it locks into place.

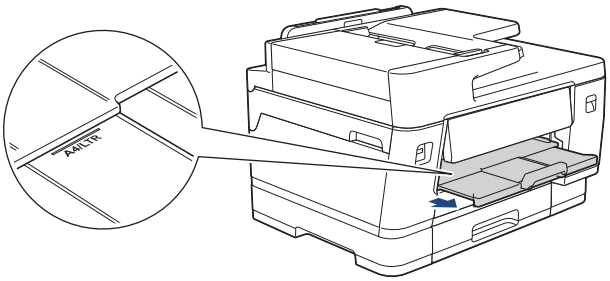

11. Change the paper size setting in the machine's menu, if needed.

Related Information

- Load Paper in Paper Tray #1 / Paper Tray #2 / Paper Tray #3

Related Topics:

- Change the Check Paper Setting
- Change the Paper Size and Paper Type

- Choose the Right Print Media

Load A3, Ledger, or Legal Size Paper in Paper Tray #1 / Paper Tray #2 / Paper Tray #3

- If the `[Check Paper]` setting is set to `[On]` and you pull the paper tray out of the machine, a message appears on the LCD, allowing you to change the paper size and paper type.
- When you load a different paper size in the tray, you must change the Paper Size setting in the machine or the paper size setting on your computer.

  Doing this enables the machine to automatically feed paper from the appropriate tray if Auto Tray Select has been set in the printer driver (Windows) or on the machine. (MFC-J3960DW/MFC-J6960DW/MFC-J6975DW/MFC-J6977DW)
- You can use only plain paper in Tray #2. (MFC-J3960DW/MFC-J6960DW/MFC-J6975DW)
- You can use only plain paper in Tray #2 and Tray #3. (MFC-J6977DW)

These instructions describe how to load paper in Tray #1.

- (MFC-J3960DW/MFC-J6960DW/MFC-J6975DW) The steps for Tray #2 are very similar.
- (MFC-J6977DW) The steps for Tray #2 and Tray #3 are very similar.

1. If the paper support flap (1) is open, close it, and then close the paper support (2).

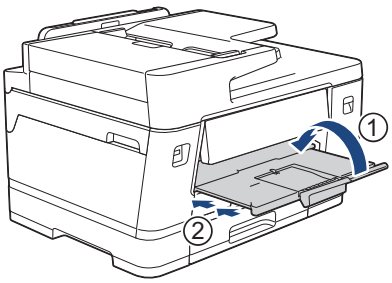

2. Pull the paper tray completely out of the machine as shown by the arrow.

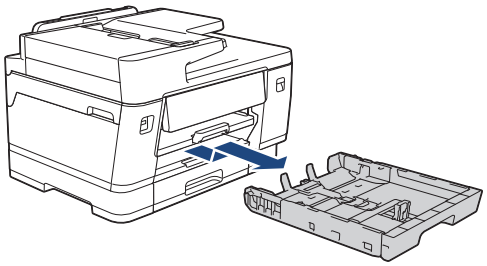

(MFC-J3960DW/MFC-J6960DW/MFC-J6975DW/MFC-J6977DW)

When you load paper in Tray #2 or Tray #3 (MFC-J6977DW), remove the tray top cover (1).

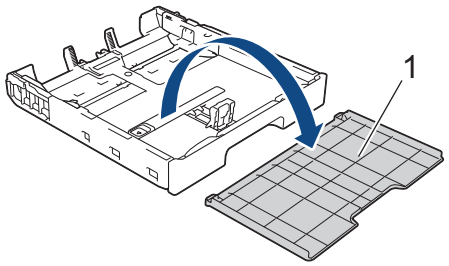

3. Rest the tray on a flat surface.

   Push the green slider to the left and then extend the tray until it locks into place.

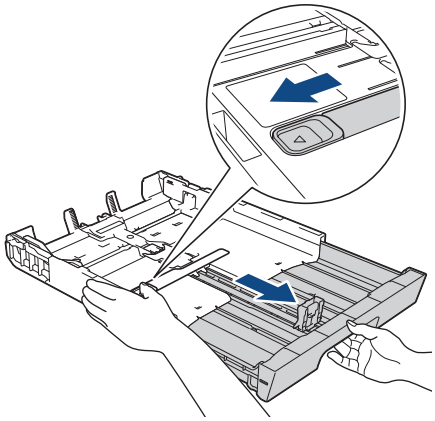

4. Gently press and slide the paper width guides (1) and then the paper length guide (2) to fit the paper size.

   Make sure the triangular mark (3) on the paper width guide (1) and paper length guide (2) line up with the marks for the paper you are using.

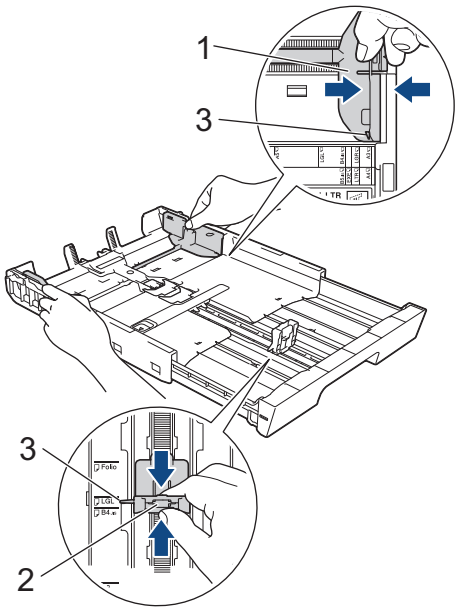

5. Fan the stack of paper well to avoid paper jams and misfeeds.

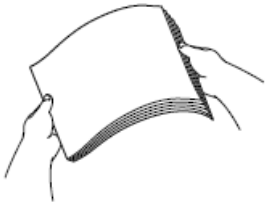

Always make sure the paper is not curled or wrinkled.

6. Gently load paper in the paper tray with the printing surface **face down**.

   Portrait orientation

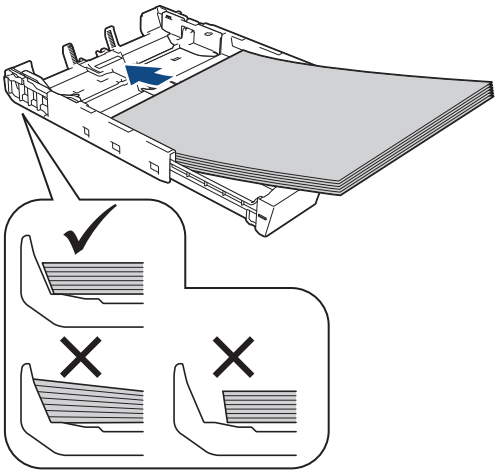

IMPORTANT

Be careful not to push the paper in too far; it may lift at the back of the tray and cause paper feed problems.

To add paper before the tray is empty, remove the paper from the tray and combine it with the paper you are adding. Always fan the stack of paper well to prevent the machine from feeding multiple pages.

7. Make sure the paper length guide (1) touches the edges of the paper.

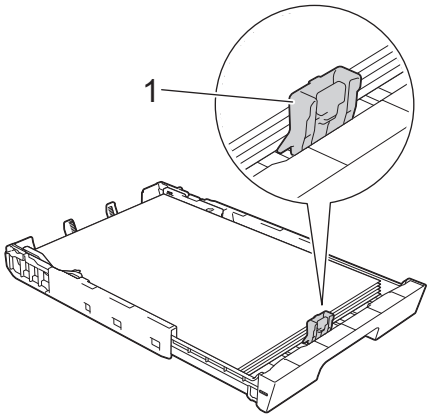

8. Gently adjust the paper width guides (1) to fit the paper.

   Make sure the paper guides touch the edges of the paper.

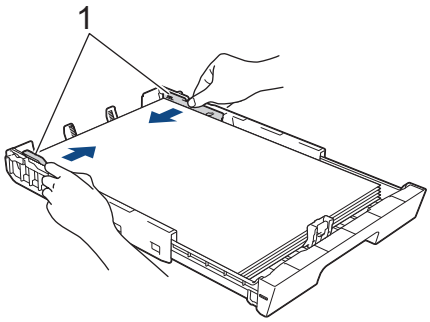

9. Make sure the paper is flat in the tray and below the maximum paper mark (1).

   Overfilling the paper tray may cause paper jams.

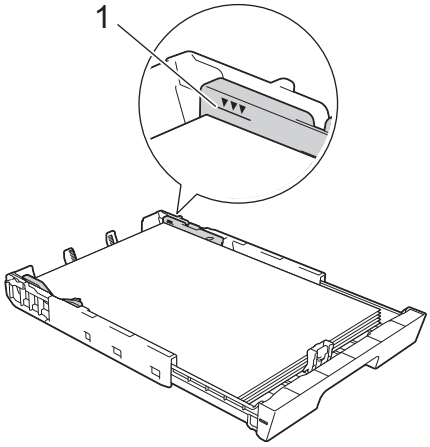

(MFC-J3960DW/MFC-J6960DW/MFC-J6975DW/MFC-J6977DW)

When you load paper in Tray #2 or Tray #3 (MFC-J6977DW), replace the tray top cover.

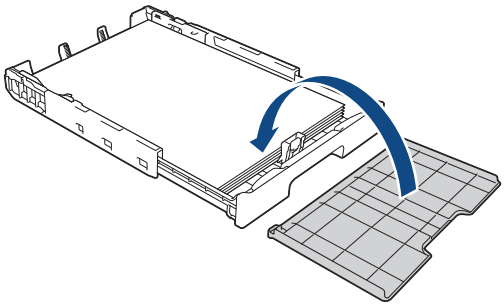

10. Slowly push the paper tray completely into the machine.

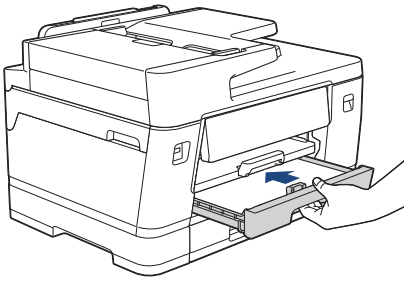

IMPORTANT

DO NOT push the paper tray into the machine forcefully or quickly. Doing this may cause paper jams or paper feed problems.

11. Pull out the paper support (1) until it locks into place, and then unfold the paper support flap (2).

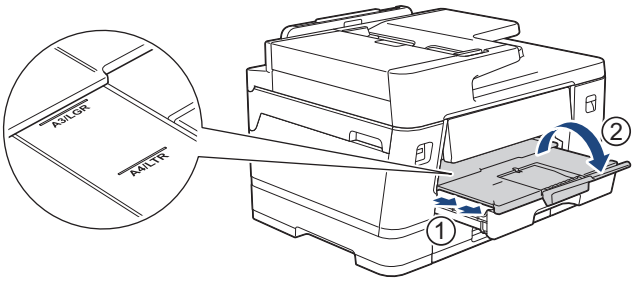

12. Change the paper size setting in the machine's menu, if needed.

Before you collapse the paper tray, take the paper out of the tray.

Rest the tray on a flat surface.

Push the green slider to the left and then push in the front of the tray to collapse it until it locks into place. Put the paper in the tray.

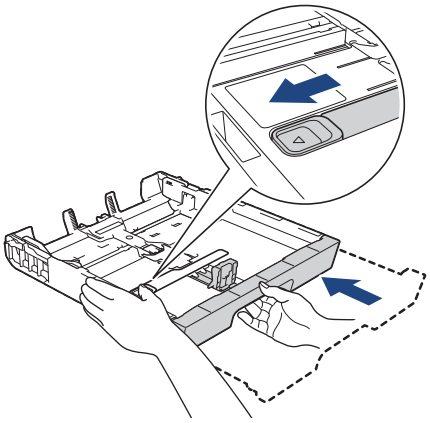

Related Information

- Load Paper in Paper Tray #1 / Paper Tray #2 / Paper Tray #3

Load Photo Paper in Paper Tray #1

- If the [Check Paper] setting is set to [On] and you pull the paper tray out of the machine, a message appears on the LCD, allowing you to change the paper size and paper type.
- When you load a different paper size in the tray, you must change the Paper Size setting in the machine or the paper size setting on your computer.

  Doing this enables the machine to automatically feed paper from the appropriate tray if Auto Tray Select has been set in the printer driver (Windows) or on the machine. (MFC-J3960DW/MFC-J6960DW/MFC-J6975DW/MFC-J6977DW)

1. If the paper support flap (1) is open, close it, and then close the paper support (2).

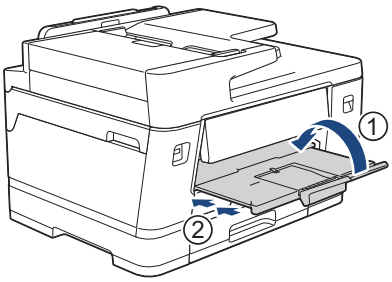

2. Pull the paper tray completely out of the machine as shown by the arrow.

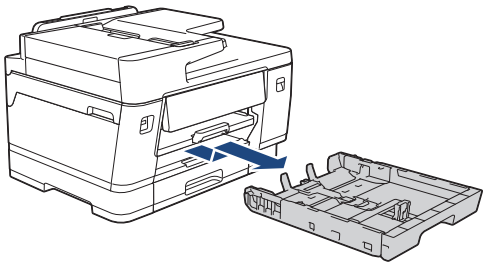

3. Do one of the following:
   - If you load Photo L (9 x 13 cm) in the paper tray, lift the Photo L stopper (1).
   - If you load Photo (10 x 15 cm) in the paper tray, lift the Photo stopper (2).
   - If you load Photo 2L (13 x 18 cm) in the paper tray, lift the Photo 2L stopper (3).

   Gently press and slide the paper width guides (4) to fit the paper size.

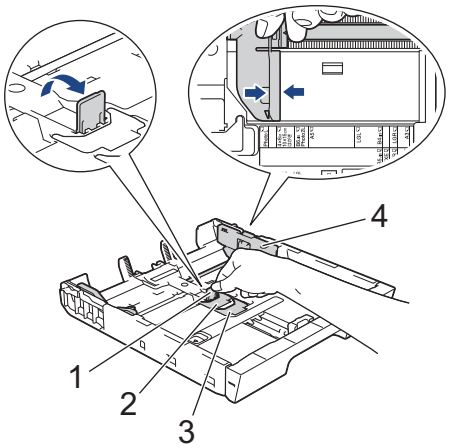

4. Load up to 20 sheets of photo paper in the paper tray with the printing surface **face down**.

   Loading more than 20 sheets of photo paper may cause paper jams.

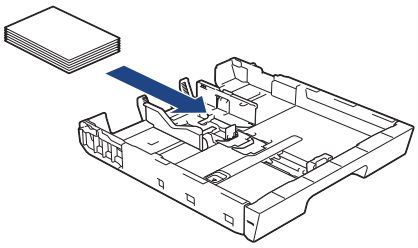

5. Gently adjust the paper width guides (1) to fit the paper.

   Make sure the paper guides touch the edges of the paper and the paper is flat in the tray.

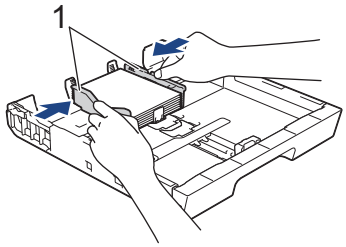

6. Slowly push the paper tray completely into the machine.

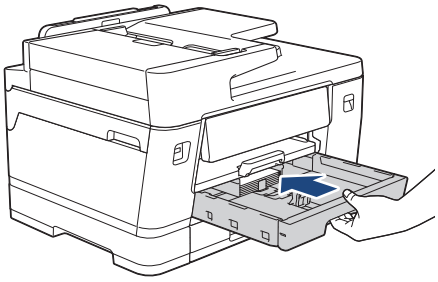

IMPORTANT

DO NOT push the paper tray into the machine forcefully or quickly. Doing this may cause paper jams or paper feed problems.

7. Pull out the paper support until it locks into place.

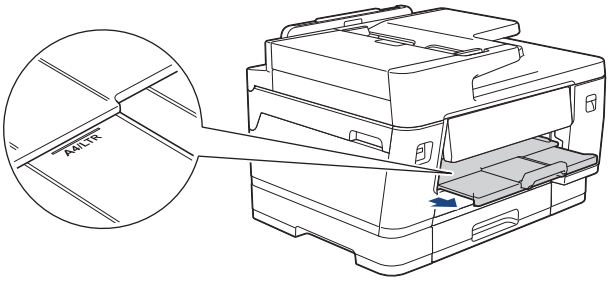

8. Change the paper size setting in the machine's menu, if needed.

Related Information

- Load Paper in Paper Tray #1 / Paper Tray #2 / Paper Tray #3

Related Topics:

- Change the Check Paper Setting
- Change the Paper Size and Paper Type
- Choose the Right Print Media

Load Envelopes in Paper Tray #1

- If the `[Check Paper]` setting is set to `[On]` and you pull the paper tray out of the machine, a message appears on the LCD, allowing you to change the paper size and paper type.
- You can load envelopes in a variety of sizes. See *Related Information*: *Paper Type and Paper Size for Each Operation*.
- When you load a different paper size in the tray, you must change the Paper Size setting in the machine or the paper size setting on your computer.

  Doing this enables the machine to automatically feed paper from the appropriate tray if Auto Tray Select has been set in the printer driver (Windows) or on the machine. (MFC-J3960DW/MFC-J6960DW/MFC-J6975DW/MFC-J6977DW)
- Before loading envelopes in the tray, press the corners and sides of the envelopes to make them as flat as possible.

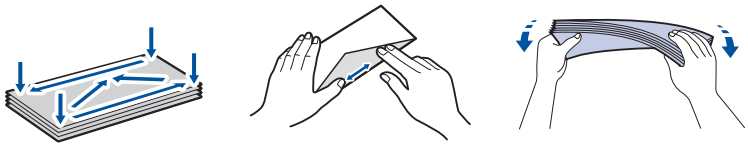

1. If the paper support flap (1) is open, close it, and then close the paper support (2).

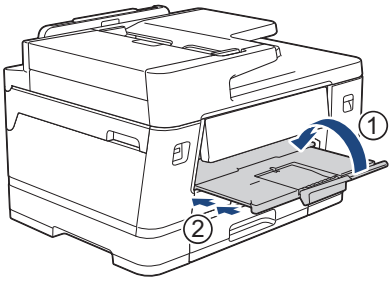

2. Pull the paper tray completely out of the machine as shown by the arrow.

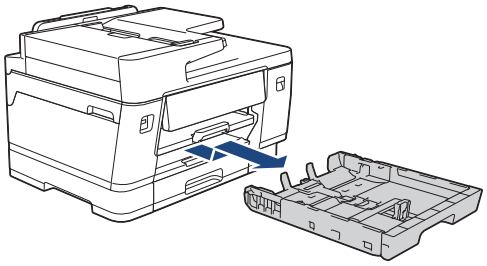

3. Load up to 10 envelopes in the paper tray with the printing surface **face down**. Loading more than 10 envelopes may cause paper jams.

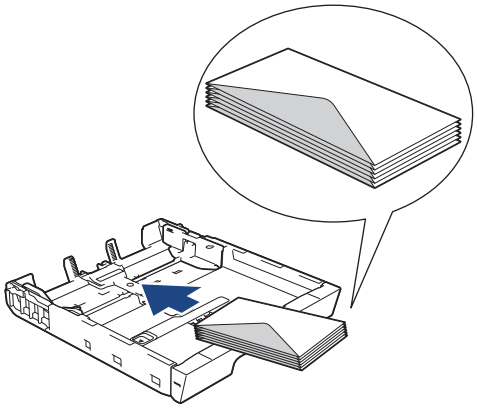

4. Gently press and slide the paper width guides (1) and paper length guide (2) to fit the size of the envelopes.

   Make sure the envelopes are flat in the tray.

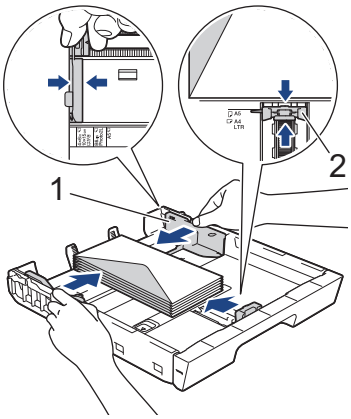

IMPORTANT

If envelopes are multi-feeding, load one envelope in the paper tray at a time.

5. Slowly push the paper tray completely into the machine.

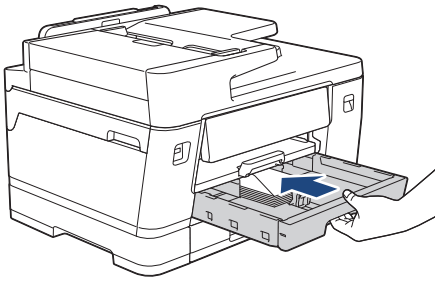

IMPORTANT

DO NOT push the paper tray into the machine forcefully or quickly. Doing this may cause paper jams or paper feed problems.

6. Pull out the paper support (1) until it locks into place, and then unfold the paper support flap (2).

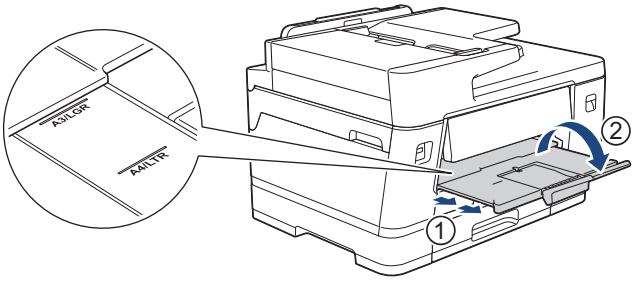

7. Change the paper size setting in the machine's menu, if needed.

Related Information

- Load Paper in Paper Tray #1 / Paper Tray #2 / Paper Tray #3

Related Topics:

- Paper Type and Paper Size for Each Operation
- Change the Check Paper Setting
- Change the Paper Size and Paper Type
- Choose the Right Print Media

Load Paper in the Multi-purpose Tray (MP Tray)

Related Models: MFC-J3960DW/MFC-J6960DW/MFC-J6975DW/MFC-J6977DW

- Load Cut-Sheet Paper, Photo Paper, or Envelopes in the Multi-purpose Tray (MP Tray)
- Load Long Paper in the Multi-purpose Tray (MP Tray)

Load Cut-Sheet Paper, Photo Paper, or Envelopes in the Multi-purpose Tray (MP Tray)

Related Models: MFC-J3960DW/MFC-J6960DW/MFC-J6975DW/MFC-J6977DW

Use the MP tray for special print media, such as photo paper or envelopes.

- If the `[Check Paper]` setting is set to `[On]` and you set the paper in the MP tray, a message appears on the LCD, allowing you to change the paper size and paper type.
- When you load a different paper size in the tray, you must change the Paper Size setting in the machine or the paper size setting on your computer.

  Doing this enables the machine to automatically feed paper from the appropriate tray if Auto Tray Select has been set in the printer driver (Windows) or on the machine.

NOTE

To prevent dust from entering the machine, be sure to close the MP tray if you are not using it.

1. Open the MP tray.

When you want to load paper larger than A4 or Letter size paper, pull up the paper support using both hands until it locks into place.

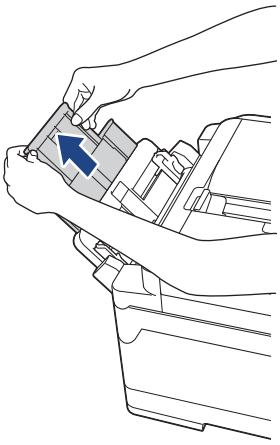

2. Gently press and slide the MP tray paper guides to match the width of the paper you are using.

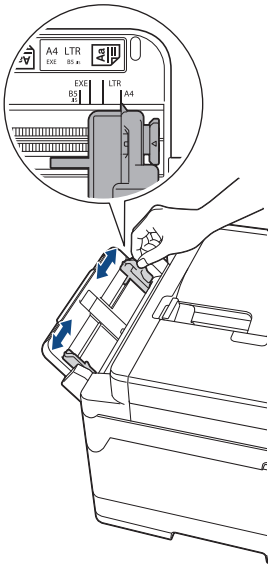

3. Fan the stack of paper well to avoid paper jams and misfeeds.

Always make sure the paper is not curled or wrinkled.

4. Gently load the paper in the MP tray with the printing surface **face up**.
   - Using A4, Letter, or Executive

Landscape orientation

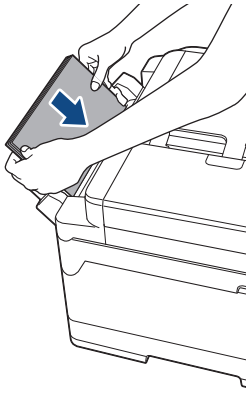

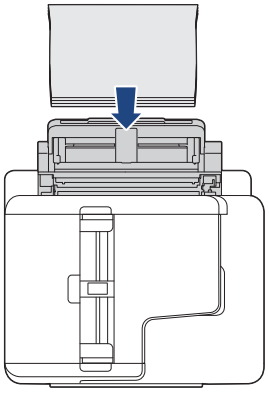

   - Using A3, Ledger, Legal, Folio, Mexico Legal, India Legal, A5, A6, envelopes, Photo, Photo L, Photo 2L, or Index Card

Portrait orientation

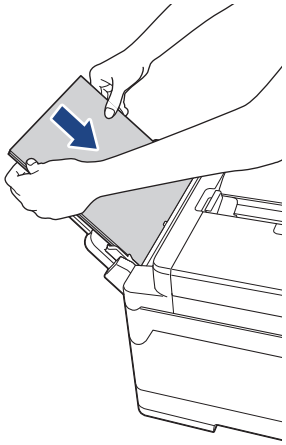

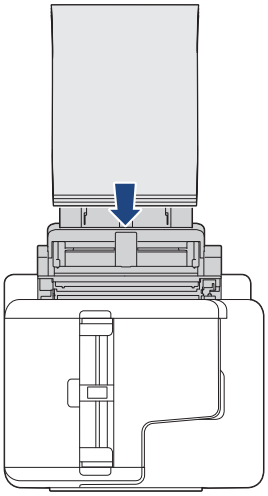

When using envelopes, load the envelopes with the printing surface **face up** and the flap on the left as shown in the illustration.

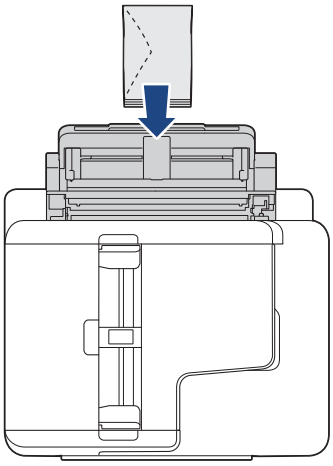

If you are having difficulty loading paper in the MP tray, push the release lever (1) towards the back of the machine, and then load the paper.

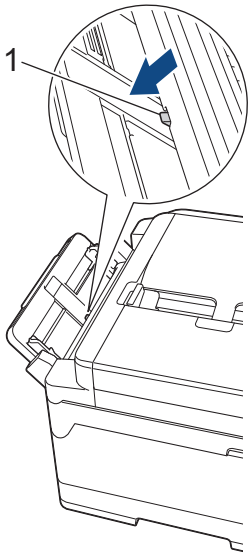

5. Using both hands, gently adjust the MP tray paper guides to fit the paper.

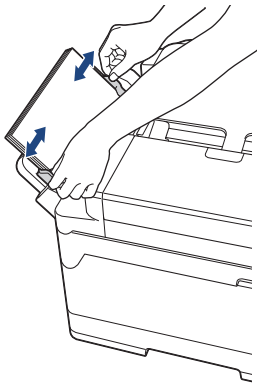

- DO NOT press the paper guides too tightly against the paper. Doing this may cause the paper to fold and jam.
- Place the paper in the centre of the MP tray between the paper guides. If the paper is not centred, pull it out and insert it again at the centre position.

6. Do one of the following:
   - When using A4 or Letter, or smaller size paper, pull out the paper support until it locks into place.

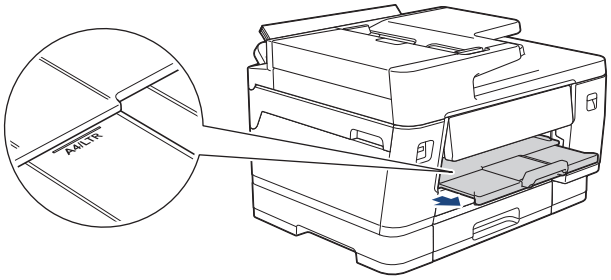

   - When using paper larger than A4, Letter, or envelopes, pull out the paper support (1) until it locks into place, and then unfold the paper support flap (2).

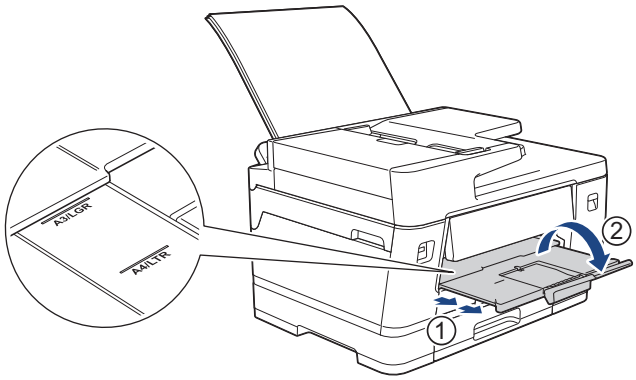

7. Change the paper size setting in the machine's menu, if needed.

Make sure printing has finished before you close the MP tray.

Related Information

- Load Paper in the Multi-purpose Tray (MP Tray)

Related Topics:

- Choose the Right Print Media

Load Long Paper in the Multi-purpose Tray (MP Tray)

Related Models: MFC-J3960DW/MFC-J6960DW/MFC-J6975DW/MFC-J6977DW

Load **one sheet** of Long paper at a time using the MP tray.

- Use the MP tray to print on Long paper (Width: 88.9 - 297 mm / Height: 431.9 - 1200 mm).
- Use Long paper only when printing from your computer or when printing using AirPrint. Do not use Long paper when copying or faxing.
- If the `[Check Paper]` setting is set to `[On]` and you set the paper in the MP tray, a message appears on the LCD, allowing you to change the paper size and paper type.
- When you load a different paper size in the tray, you must change the Paper Size setting in the machine or the paper size setting on your computer.

  Doing this enables the machine to automatically feed paper from the appropriate tray if Auto Tray Select has been set in the printer driver (Windows) or on the machine.
- If the ink cartridges have reached the end of their lives when you are printing on Long paper, you can replace them with new ink cartridges of the same colour and continue printing.

  The colour tone may be different after the ink cartridge replacement.

NOTE

To prevent dust from entering the machine, be sure to close the MP tray if you are not using it.

1. Open the MP tray.

   IMPORTANT

   To avoid damaging the paper, DO NOT pull up the paper support when loading Long paper.

2. Gently press and slide the MP tray paper guides to match the width of the paper you are using.

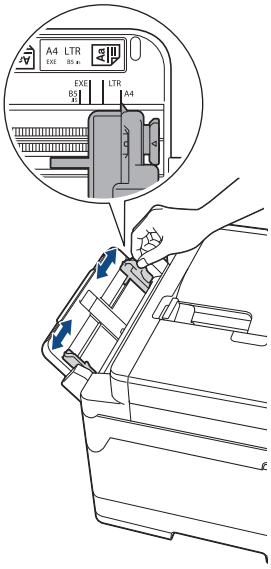

3. Load only **one sheet of paper** in the MP tray with the printing surface **face up**. Using both hands, push one sheet of paper into the MP tray until the feeding edge touches the paper feed rollers.

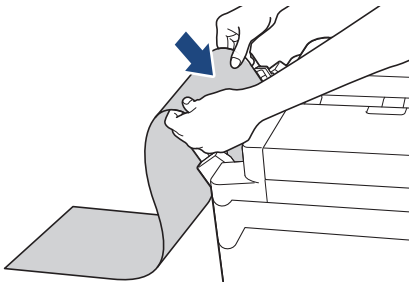

If you are having difficulty loading paper in the MP tray, push the release lever (1) towards the back of the machine, and then load the paper.

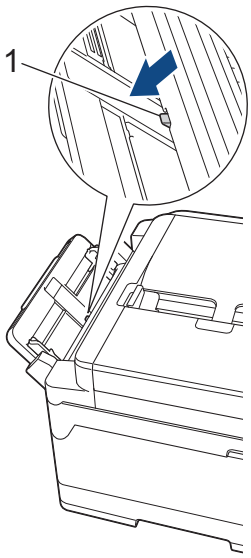

4. Using both hands, gently adjust the MP tray paper guides to fit the paper.

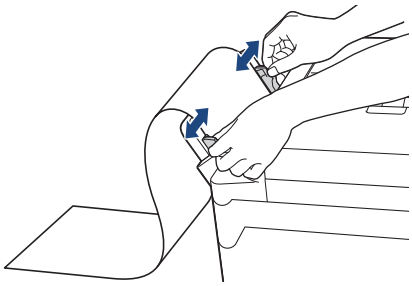

IMPORTANT

DO NOT load more than one sheet of Long paper in the MP tray at any time. Doing this may cause a paper jam. When printing multiple pages, do not feed the next sheet of paper until the touchscreen displays a message instructing you to feed the next sheet.

5. Pull out the paper support (1) until it locks into place, and then unfold the paper support flap (2).

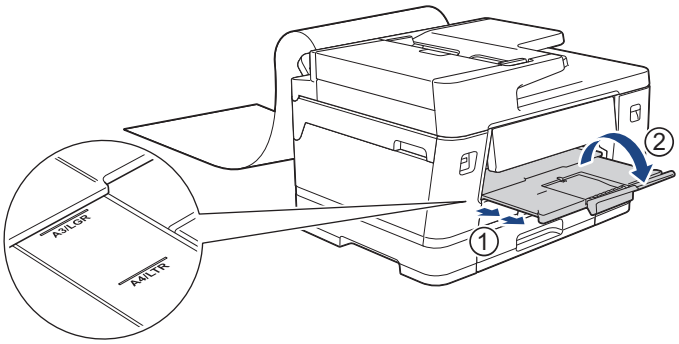

When you feed Long paper into the MP tray, the machine holds the printed page after printing so it does not fall. When printing is complete, remove the printed page and press `[OK]`.

6. Change the paper size setting to `[User-Defined Size]` and enter the actual size using the machine's touchscreen.

Make sure printing has finished before you close the MP tray.

Related Information

- Load Paper in the Multi-purpose Tray (MP Tray)

Related Topics:

- Choose the Right Print Media
- Print on Long Paper (Windows)

Load Paper in the Manual Feed Slot

Related Models: MFC-J3660DW/MFC-J6560DW/MFC-J6760DW

Load special print media in this slot, one sheet at a time.

The machine automatically turns on Manual Feed mode when you put paper in the manual feed slot.

1. Open the manual feed slot cover.

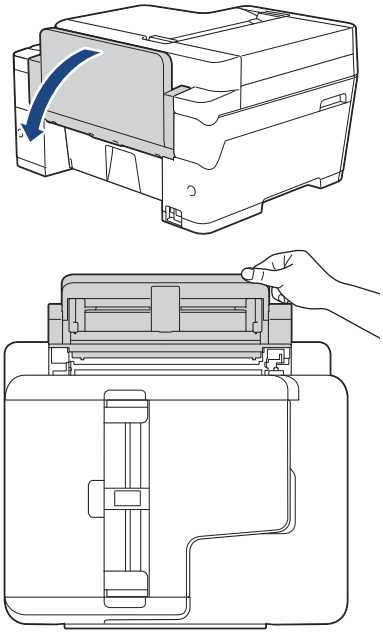

2. Slide the manual feed slot paper guides to fit the width of the paper you are using.

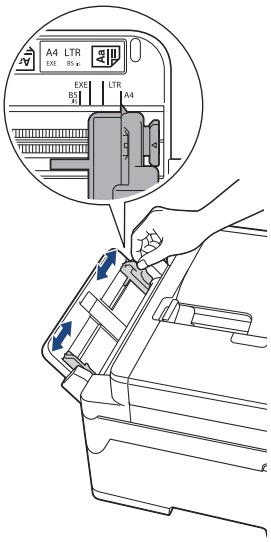

3. Load only one sheet of paper in the manual feed slot with the printing surface **face up**.

   Using both hands, push one sheet of paper into the manual feed slot until the feeding edge touches the paper feed rollers. Let go of the paper when you feel the machine pull it. The LCD displays `[Manual Feed Slot ready]`.

   Read the instruction displayed on the LCD, and then press `[OK]`.

- Using A4, Letter, or Executive

Landscape orientation

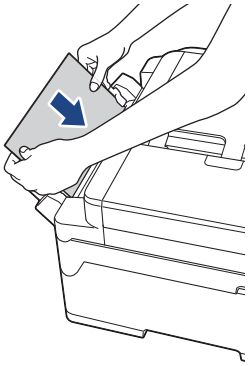

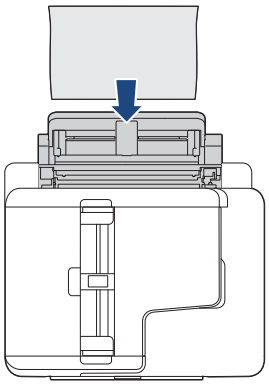

- Using A3, Ledger, Legal, Folio, Mexico Legal, India Legal, A5, A6, envelopes, Photo, Photo L, Photo 2L, or Index Card

Portrait orientation

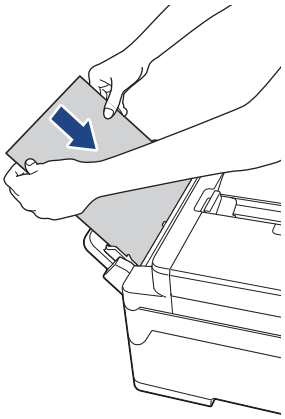

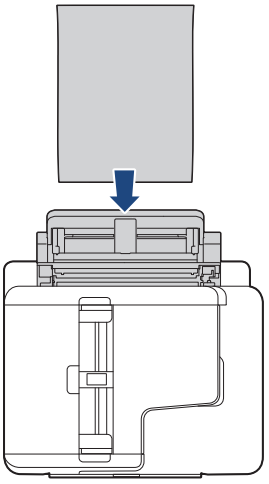

- When using envelopes, load the envelopes with the printing surface **face up** and the flap on the left as shown in the illustration.

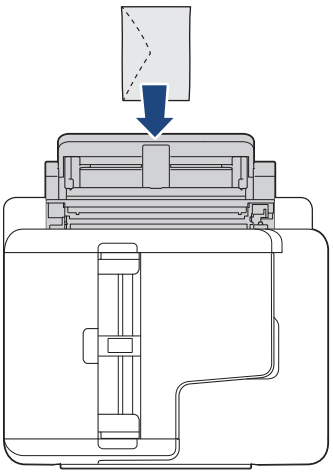

- When loading an envelope, or a sheet of thick paper, push the envelope into the manual feed slot until you feel the paper feed rollers grab it.

IMPORTANT

- DO NOT load more than one sheet of paper in the manual feed slot at any time. Doing this may cause a paper jam. When printing multiple pages, do not feed the next sheet of paper until the touchscreen displays a message instructing you to feed the next sheet.
- DO NOT load paper in the manual feed slot when you are printing from the paper tray. Doing this may cause a paper jam.

4. Do one of the following:
   - When using A4 or Letter size, or smaller size paper

     Pull out the paper support until it locks into place.

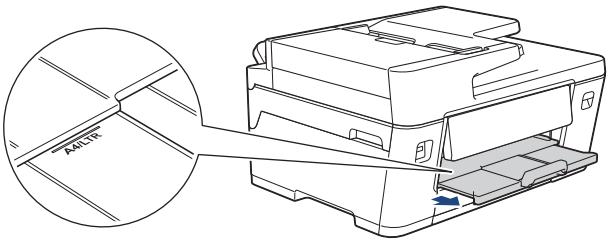

   - When using paper larger than A4 or Letter size, or envelopes

     Pull out the paper support (1) until it locks into place, and then unfold the paper support flap (2).

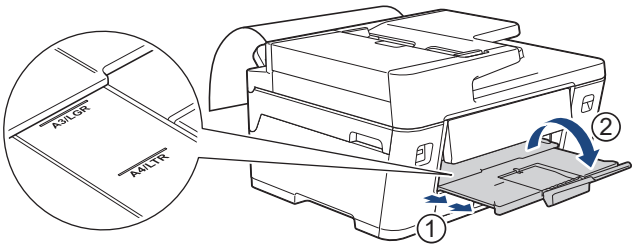

- If the document does not fit on one sheet, the LCD will prompt you to load another sheet of paper. Place another sheet of paper in the manual feed slot, and then press [OK].
- When you feed paper larger than A4 or Letter size into the manual feed slot, the machine holds the printed page after printing so it does not fall. When printing is complete, remove the printed page and press [OK].
- Make sure printing has finished before you close the manual feed slot cover.
- The machine will eject paper loaded in the manual feed slot while a test page, fax, or report is being printed.
- The machine will eject paper loaded in the manual feed slot during the machine's cleaning process. Wait until the machine finishes its cleaning, and then load paper in the manual feed slot.

Related Information

- Load Paper

Related Topics:

- Choose the Right Print Media

Unprintable Area

The unprintable area depends on the settings in the application you are using. The figures below show the unprintable areas on Cut-sheet paper and envelopes. The machine can print in the shaded areas of Cut-sheet paper only when the Borderless print feature is available and turned on.

Cut-Sheet Paper

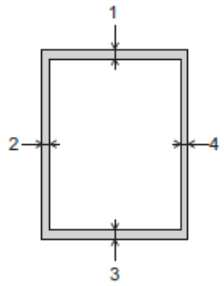

Envelope

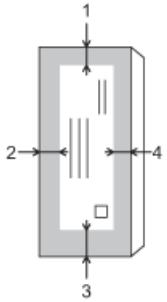

	Top (1)	Left (2)	Bottom (3)	Right (4)
Cut-Sheet	3 mm	3 mm	3 mm [1]	3 mm
Envelope	12 mm	3 mm	12 mm	3 mm

The Borderless print feature is not available for envelopes and 2-sided printing.

Related Information

- Load Paper

[1] (MFC-J3960DW/MFC-J6960DW/MFC-J6975DW/MFC-J6977DW) 5 mm when using Long paper.

Paper Settings

- Change the Paper Size and Paper Type
- Change the Check Paper Setting
- Set a Default Tray Based on Your Task
- Change Paper Tray Priority

Change the Paper Size and Paper Type

Set the Paper Size and Paper Type settings for the paper tray.

- To get the best print quality, set the machine for the type of paper you are using.
- When you change the size of the paper you load in the tray, you must change the Paper Size setting on the LCD at the same time.

1. (MFC-J3960DW/MFC-J6960DW/MFC-J6975DW/MFC-J6977DW) Press [Settings] > [All Settings] > [General Setup] > [Tray Setting]. Press the tray option you want.
2. (MFC-J3660DW/MFC-J6560DW/MFC-J6760DW) Press [Settings] > [All Settings] > [General Setup].
3. Press [Paper Type].
4. Press ▲ or ▼ to display the paper type options, and then press the option you want.

- (MFC-J3960DW/MFC-J6960DW/MFC-J6975DW) Use plain paper only in Tray #2.
- (MFC-J6977DW) Use plain paper only in Tray #2 and Tray #3.

5. Press [Paper Size].
6. Press ▲ or ▼ to display the paper size options, and then press the option you want.

If the LCD instructions for loading paper appear, read the instructions, and then press [OK].

7. Press .

The machine ejects paper with the printed surface face up onto the paper tray at the front of the machine. When you use glossy paper, remove each sheet at once to prevent smudging or paper jams.

Related Information

- Paper Settings

Related Topics:

- Load A4, Letter, or Executive Size Paper in Paper Tray #1 / Paper Tray #2 / Paper Tray #3
- Load Photo Paper in Paper Tray #1
- Load Envelopes in Paper Tray #1
- Acceptable Print Media

Change the Check Paper Setting

If this setting is set to [On] and the paper tray is removed or you load paper in the MP tray, the LCD displays a message allowing you to change the Paper Size and Paper Type settings.

The default setting is [On].

1. Press [Settings] > [All Settings] > [General Setup].
2. (MFC-J3960DW/MFC-J6960DW/MFC-J6975DW/MFC-J6977DW) Press [Tray Setting].
3. Press ▲ or ▼ to display the [Check Paper] option, and then press it.
4. Press [On] or [Off].
5. Press .

Related Information

- Paper Settings

Related Topics:

- Load A4, Letter, or Executive Size Paper in Paper Tray #1 / Paper Tray #2 / Paper Tray #3
- Load Photo Paper in Paper Tray #1
- Load Envelopes in Paper Tray #1

Set a Default Tray Based on Your Task

Related Models: MFC-J3960DW/MFC-J6960DW/MFC-J6975DW/MFC-J6977DW

Change the default tray the machine uses for each mode.

The machine feeds paper from the most appropriate tray using the tray priority order you have set.

Some trays are not available depending on your model.

1. Press [Settings] > [All Settings] > [General Setup] > [Tray Setting].
   - For printing in Copy mode, press [Copy] > [Select Tray].
   - For printing received faxes, press [Fax] > [Select Tray].
   - For printing photos, press [JPEG Print (Media)] > [Select Tray].
2. Press the tray option you want.

[Auto Tray Select] sets your machine to feed paper from the most appropriate tray for the paper type and size you have set.

3. Press .

Related Information

- Paper Settings

Change Paper Tray Priority

Related Models: MFC-J3960DW/MFC-J6960DW/MFC-J6975DW/MFC-J6977DW

Change the default tray priority the machine uses for each mode.

When [Auto Tray Select] is selected in the tray select settings, the machine feeds paper from the most appropriate tray for the paper type and size according to the tray priority setting.

1. Press [Settings] > [All Settings] > [General Setup] > [Tray Setting].
2. Press the [Copy], [Fax], [Print], or [JPEG Print (Media)] option.
3. Press [Tray Priority].
4. Press the option you want.
5. Press .

Related Information

- Paper Settings

Acceptable Print Media

The print quality can be affected by the type of paper you use in the machine.

To get the best print quality for the settings you have selected, always set the Paper Type to match the type of paper you load.

You can use plain paper, inkjet paper (coated paper), glossy paper, recycled paper, and envelopes.

We recommend testing various paper types before buying large quantities.

For best results, we recommend using Brother paper.

- When you print on inkjet paper (coated paper) and glossy paper, be sure to select the correct print media in the printer driver or in the application you use to print, or the Paper Type setting on the machine.
- When you print on photo paper, load one extra sheet of the same photo paper in the paper tray.
- When using photo paper, remove each sheet at once to prevent smudging or paper jams.
- Avoid touching the printed surface of the paper immediately after printing; the surface may not be completely dry and may stain your fingers.
- MFC-J3960DW/MFC-J6960DW/MFC-J6975DW/MFC-J6977DW:

  When printing on A5 or A6 size plain paper using the MP tray, load one extra sheet of the same size paper in the tray.

Related Information

- Load Paper
  - Recommended Print Media
  - Handle and Use Print Media
  - Choose the Right Print Media

Related Topics:

- Change the Paper Size and Paper Type

Recommended Print Media

For the best print quality, we recommend using the Brother paper listed in the table.

Brother paper may not be available in all countries.

If Brother paper is not available in your country, we recommend testing various paper types before purchasing large quantities.

Brother paper

Paper Type	Item
A3 / Plain	BP60PA3
A3 / Glossy Photo	BP71GA3
A3 / Inkjet (Matte)	BP60MA3
A4 / Plain	BP60PA
A4 / Glossy Photo	BP71GA4
A4 / Inkjet (Matte)	BP60MA
10 x 15 cm / Glossy Photo	BP71GP

Related Information

- Acceptable Print Media

Handle and Use Print Media

- Store paper in its original packaging and keep it sealed. Keep the paper flat and away from moisture, direct sunlight and heat.
- Avoid touching the shiny (coated) side of photo paper.
- Some envelope sizes require that you set margins in the application. Make sure you do a test print first before printing many envelopes.

IMPORTANT

DO NOT use the following types of paper:

- Damaged, curled, wrinkled, or irregularly shaped

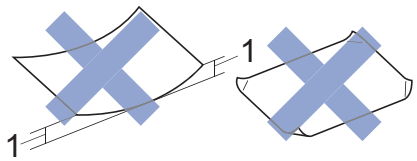

1. **2 mm or greater curl may cause jams to occur.**

- Extremely shiny or highly textured
- Paper that cannot be arranged uniformly when stacked
- Paper with an adhesive surface

DO NOT use envelopes that:

- Are loosely constructed
- Have windows
- Are embossed (have raised writing on them)
- Have clasps or staples
- Are pre-printed on the inside
- Are self-adhesive
- Have double flaps

Self-adhesive	Double flaps

You may experience paper feed problems caused by the thickness, size and flap shape of the envelopes you are using.

Related Information

- Acceptable Print Media

Related Topics:

- Load Paper in Paper Tray #1 / Paper Tray #2 / Paper Tray #3

Choose the Right Print Media

- Paper Type and Paper Size for Each Operation
- Paper Orientation and Capacity of the Paper Trays

Paper Type and Paper Size for Each Operation

Paper Type	Paper Size		Usage				
			Fax	Copy	Direct Print		Printer
					JPEG Print	PDF Print [1]	
Cut-Sheet	A3	297 x 420 mm	Yes	Yes	Yes	Yes	Yes
	A4	210 x 297 mm	Yes	Yes	Yes	Yes	Yes
	Ledger	279.4 x 431.8 mm	Yes	Yes	Yes	Yes	Yes
	Letter	215.9 x 279.4 mm	Yes	Yes	Yes	Yes	Yes
	Legal	215.9 x 355.6 mm	Yes	Yes	-	Yes	Yes
	Mexico Legal	215.9 x 339.85 mm	Yes	Yes	-	Yes	Yes
	India Legal	215 x 345 mm	Yes	Yes	-	Yes	Yes
	Folio	215.9 x 330.2 mm	Yes	Yes	-	Yes	Yes
	Executive	184.1 x 266.7 mm	-	-	-	-	Yes
	A5	148 x 210 mm	-	Yes	-	Yes	Yes
	A6	105 x 148 mm	-	Yes	-	Yes	Yes
	Long Paper	Width: 88.9 - 297 mm Height: 431.9 - 1200 mm	-	-	-	-	Yes
Cards	Photo	10 x 15 cm	-	Yes	Yes	-	Yes
	Photo L	9 x 13 cm	-	-	-	-	Yes
	Photo 2L	13 x 18 cm	-	-	Yes	-	Yes
	Index Card	13 x 20 cm	-	-	-	-	Yes
Envelopes	C5 Envelope	162 x 229 mm	-	-	-	-	Yes
	DL Envelope	110 x 220 mm	-	-	-	-	Yes
	Com-10	104.7 x 241.3 mm	-	-	-	-	Yes
	Monarch	98.4 x 190.5 mm	-	-	-	-	Yes

[1] PDF Print is available only for MFC-J6975DW/MFC-J6977DW.

Related Information

- Choose the Right Print Media

Related Topics:

- Load Envelopes in Paper Tray #1

Paper Orientation and Capacity of the Paper Trays

	Paper Size	Paper Types	No. of sheets	Weight	Thickness
Paper Tray #1	<Landscape> A4, Letter, Executive <Portrait> A3, Ledger, Legal, Mexico Legal, India Legal, Folio, A5, A6, Envelopes (C5, Com-10, DL, Monarch), Photo (10 x 15 cm), Photo L (9 x 13 cm), Photo 2L (13 x 18 cm), Index card (13 x 20 cm)	Plain Paper, Recycled Paper	250 [1]	64 to 120 g/m²	0.08 to 0.15 mm
		Inkjet Paper	20	64 to 200 g/m²	0.08 to 0.25 mm
		Glossy Paper [2]	20	Up to 220 g/m²	Up to 0.25 mm
		Photo Card [2]	20	Up to 200 g/m²	Up to 0.25 mm
		Index Card	30	Up to 120 g/m²	Up to 0.15 mm
		Envelopes	10	80 to 95 g/m²	Up to 0.52 mm
Paper Tray #2 (MFC-J3960DW/ MFC-J6960DW/ MFC-J6975DW/ MFC-J6977DW)	<Landscape> A4, Letter <Portrait> A3, Ledger, Legal, Mexico Legal, India Legal, Folio	Plain Paper, Recycled Paper	250 [1]	64 to 120 g/m²	0.08 to 0.15 mm
Paper Tray #3 (MFC-J6977DW)	<Landscape> A4, Letter <Portrait> A3, Ledger, Legal, Mexico Legal, India Legal, Folio	Plain Paper, Recycled Paper	250 [1]	64 to 120 g/m²	0.08 to 0.15 mm
Multi-purpose tray (MP tray) [3] (MFC-J3960DW/ MFC-J6960DW/ MFC-J6975DW/ MFC-J6977DW)	<Landscape> A4, Letter, Executive <Portrait> A3, Ledger, Legal, Mexico Legal, India Legal, Folio, A5, A6, Envelopes (C5, Com-10, DL, Monarch), Photo (10 x 15 cm), Photo L (9 x 13 cm), Photo 2L (13 x 18 cm), Index card (13 x 20 cm)	Plain Paper, Recycled Paper	100 [1]	64 to 120 g/m²	0.08 to 0.15 mm
		Inkjet Paper	20 (Up to A4/Letter) 5 (Over A4/ Letter)	64 to 200 g/m²	0.08 to 0.25 mm
		Glossy Paper, Photo Card [2]	20 (Up to A4/Letter) 5 (Over A4/ Letter)	Up to 220 g/m²	Up to 0.3 mm
		Index Card	50	Up to 120 g/m²	Up to 0.15 mm
		Envelopes	20 (Up to A4/Letter) 5 (Over A4/ Letter)	80 to 95 g/m²	Up to 0.52 mm
	Long Paper (Width: 88.9 - 297 mm / Height: 431.9 - 1200 mm)	Plain Paper, Recycled Paper, Inkjet Paper, Glossy Paper	1	64 to 220 g/m²	0.08 to 0.25 mm
Manual Feed Slot (MFC-J3660DW/ MFC-J6560DW/ MFC-J6760DW)	<Landscape> A4, Letter, Executive <Portrait> A3, Ledger, Legal, Mexico Legal, India Legal, Folio,	Plain Paper, Recycled Paper	1	64 to 120 g/m²	0.08 to 0.15 mm
		Inkjet Paper	1	64 to 200 g/m²	0.08 to 0.25 mm

	Paper Size	Paper Types	No. of sheets	Weight	Thickness
	A5, A6, Envelopes (C5, Com-10, DL, Monarch), Photo (10 x 15 cm), Photo L (9 x 13 cm), Photo 2L (13 x 18 cm), Index card (13 x 20 cm)	Glossy Paper [2]	1	Up to 220 g/m²	Up to 0.25 mm
		Photo Card [2]	1	Up to 200 g/m²	Up to 0.25 mm
		Index Card	1	Up to 120 g/m²	Up to 0.15 mm
		Envelopes	1	80 to 95 g/m²	Up to 0.52 mm

1 When using plain paper 80 g/m²

2 BP71 260 g/m² paper is specially designed for Brother inkjet machines.

3 We recommend using the MP tray for glossy paper.

Related Information

- Choose the Right Print Media

Load Documents

- Load Documents in the Automatic Document Feeder (ADF)
- Load Documents on the Scanner Glass
- Preset the Orientation of A4 or Letter Size Documents When Using Scanner Glass
- Unscannable Area

Load Documents in the Automatic Document Feeder (ADF)

The ADF can hold multiple pages and feeds each sheet individually.

Use paper that is within the sizes and weights shown in the table. Always fan the pages before placing them in the ADF.

Document Sizes and Weights

Length: [1]	148 to 431.8 mm
Width:	105 to 297 mm
Paper Weight:	64 to 120 g/m²

[1] Up to 900 mm when using the long paper function.

IMPORTANT

- DO NOT pull on the document while it is feeding.
- DO NOT use paper that is curled, wrinkled, folded, ripped, stapled, paper clipped, pasted or taped.
- DO NOT use cardboard, newspaper or fabric.
- Make sure documents with correction fluid or written in ink are completely dry.

(MFC-J3960DW/MFC-J6760DW/MFC-J6960DW/MFC-J6975DW/MFC-J6977DW)
Your 2-sided documents can be faxed, copied, or scanned up to A3 size using the ADF.

1. Fan the pages well.
2. Adjust the paper guides (1) to fit the document size.

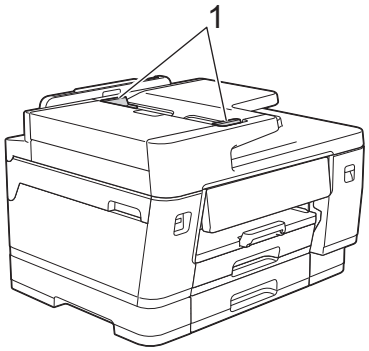

3. Place your document **face up** in the ADF, as shown in the illustration, until you feel the document touch the feed stoppers.

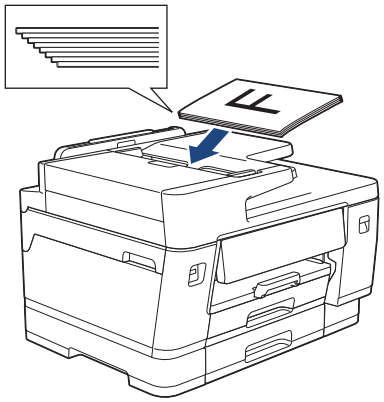

If you loaded a small size document and cannot remove it, lift the ADF document support (1), and then remove the document.

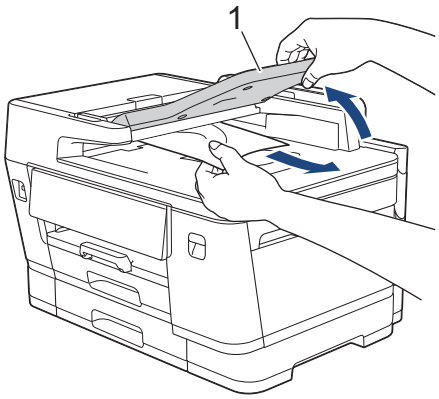

IMPORTANT

DO NOT leave any documents on the scanner glass. If you do this, the ADF may jam.

Related Information

- Load Documents

Related Topics:

- Copy a Document

Load Documents on the Scanner Glass

Use the scanner glass to fax, copy, or scan one page at a time.

Document Sizes Supported

Length:	Up to 431.8 mm
Width:	Up to 297 mm
Weight:	Up to 2 kg

To use the scanner glass, the ADF must be empty.

1. Lift the document cover.
2. Place the document **face down** in the upper left corner of the scanner glass as shown in the illustration.

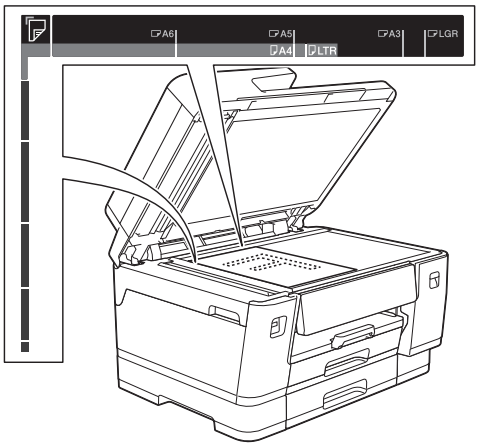

3. Close the document cover.

IMPORTANT

If you are scanning a book or thick document, DO NOT forcefully close or press on the document cover.

Related Information

- Load Documents

Related Topics:

- Copy a Document

Preset the Orientation of A4 or Letter Size Documents When Using Scanner Glass

A4 or Letter size documents can be placed on the scanner glass in either portrait or landscape orientation. Follow these instructions to preset your preferred document orientation.

Portrait orientation

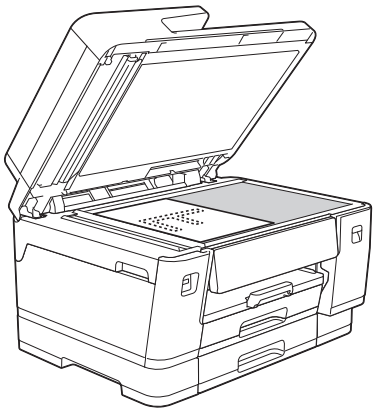

Landscape orientation

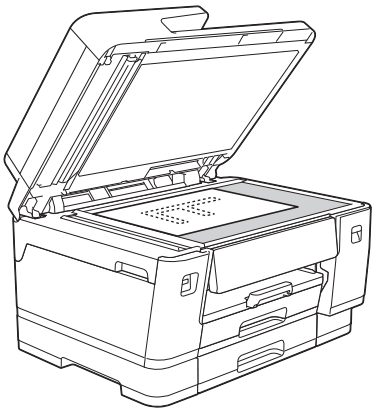

1. Press [Settings] > [All Settings] > [General Setup] > [A4/Letter Paper Orientation].
2. Select one of the following options:

Option	Description
Auto Detect	When you place an A4 or Letter size document on the scanner glass, your machine detects the orientation automatically.
Portrait	Set the orientation to portrait.
Landscape	Set the orientation to landscape.

3. If a document orientation message appears, press [OK] to confirm.
4. Press .

After setting your preferred orientation in the [A4/Letter Paper Orientation] menu, make sure you place your documents on the scanner glass in this orientation.

Related Information

- Load Documents

Unscannable Area

The unscannable area of a page depends on the settings in the application you are using. The figures below show the typical unscannable measurements.

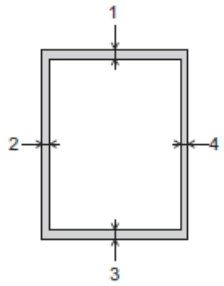

Usage	Document Size	Top (1) Bottom (3)	Left (2) Right (4)
Fax	A3	3 mm	4.5 mm
	A4		3 mm
	Ledger		3.7 mm
	Letter		4 mm
	Legal		
Copy	All paper sizes		3 mm
Scan		1 mm	1 mm

Related Information

- Load Documents

Print

- Print from Your Computer (Windows)
- Print from Your Computer (Mac)
- Print Using Brother iPrint&Scan (Windows/Mac)
- Print Data Directly from a USB Flash Drive
- Print an Email Attachment
- Universal Print
- Cancel a Print Job

Print from Your Computer (Windows)

- Print a Photo (Windows)
- Print a Document (Windows)
- Print More Than One Page on a Single Sheet of Paper (N in 1) (Windows)
- Print as a Poster (Windows)
- Print on Both Sides of the Paper Automatically (Automatic 2-sided Printing) (Windows)
- Print as a Booklet Automatically (Windows)
- Secure Print (Windows)
- Print a Colour Document in Greyscale (Windows)
- Print on Long Paper (Windows)
- Print on an Envelope (Windows)
- Use a Preset Print Profile (Windows)
- Change the Default Print Settings (Windows)
- Printer Driver Settings (Windows)

Print a Photo (Windows)

- Make sure you have loaded the correct media in the paper tray.
- For best results, we recommend using Brother paper.
- When printing on photo paper, load one extra sheet of the same photo paper in the paper tray.

1. Select the print command in your application.
2. Select your model's name, and then click the printer's properties or preferences button.
   The printer driver window appears.
3. Click the **Basic** tab.
4. Click the **Media Type** drop-down list, and then select the type of paper you are using.

   IMPORTANT

   To get the best print quality for the settings you have selected, always set the **Media Type** option to match the type of paper you load.

5. Click the **Paper Size** drop-down list, and then select your paper size.
6. Select the **Borderless** checkbox, if needed.
7. For **Colour / Greyscale**, select **Colour**.
8. In the **Orientation** field, select the **Portrait** or **Landscape** option to set the printout orientation.

   If your application contains a similar setting, we recommend that you set the printout orientation using the application.

9. Type the number of copies (1-999) you want in the **Copies** field.
10. Change other printer settings, if needed.
11. Click **OK**.
12. Complete your print operation.

Related Information

- Print from Your Computer (Windows)

Related Topics:

- Printer Driver Settings (Windows)
- Paper Settings
- Change the Default Print Settings (Windows)

Print a Document (Windows)

- Make sure you have loaded the correct size paper in the paper tray.
- MFC-J3960DW/MFC-J6960DW/MFC-J6975DW/MFC-J6977DW:

  When printing on A5 or A6 size plain paper using the MP tray, load one extra sheet of the same size paper in the tray.
- When you change an application's print settings, the changes apply only to documents printed with that application. To change print settings for all Windows applications, you must configure the printer driver properties.

  For more information, see *Related Information*:*Change the Default Print Settings (Windows)*.

2-sided printing may be the default, depending on your model. For 1-sided printing, turn off the 2-sided printing settings in the printer driver options.

1. Select the print command in your application.
2. Select your model's name, and then click the printer's properties or preferences button.

   The printer driver window appears.
3. Click the **Basic** tab.
4. Click the **Media Type** drop-down list, and then select the type of paper you are using.

   IMPORTANT

   To get the best print quality for the settings you have selected, always set the **Media Type** option to match the type of paper you load.
5. Click the **Paper Size** drop-down list, and then select your paper size.
6. For **Colour / Greyscale**, select the **Colour** or **Greyscale** option.
7. In the **Orientation** field, select the **Portrait** or **Landscape** option to set the printout orientation.

   If your application contains a similar setting, we recommend that you set the printout orientation using the application.
8. Type the number of copies (1-999) you want in the **Copies** field.
9. To print multiple pages on a single sheet of paper or print one page of your document on multiple sheets, click the **Multiple Page** drop-down list, and then select your options.
10. Click the **2-sided / Booklet** drop-down list, and then select the option you want.
11. (MFC-J3960DW/MFC-J6960DW/MFC-J6975DW/MFC-J6977DW) Click the **Paper Source** drop-down list and select the paper source.

    - You can also set the paper size and paper type for each tray using the machine's control panel.
    - You can also set the priority of each tray using the machine's control panel.

    For more information, see *Related Information*:*Paper Settings*.
12. Change other printer settings, if needed.
13. Click **OK**.
14. Complete your print operation.

Related Information

- Print from Your Computer (Windows)

Related Topics:

- Printer Driver Settings (Windows)
- Paper Settings
- Change the Default Print Settings (Windows)

Print More Than One Page on a Single Sheet of Paper (N in 1) (Windows)

2-sided printing may be the default, depending on your model. For 1-sided printing, turn off the 2-sided printing settings in the printer driver options.

1. Select the print command in your application.
2. Select your model's name, and then click the printer's properties or preferences button.

   The printer driver window appears.
3. Click the **Basic** tab.
4. In the **Orientation** field, select the **Portrait** or **Landscape** option to set the printout orientation.

If your application contains a similar setting, we recommend that you set the printout orientation using the application.

5. Click the **Multiple Page** drop-down list, and then select the **2 in 1**, **4 in 1**, **9 in 1**, or **16 in 1** option.
6. Click the **Page Order** drop-down list, and then select your page order.
7. Click the **Border Line** drop-down list, and then select your border line type.
8. Change other printer settings, if needed.
9. Click **OK**.
10. Complete your print operation.

Related Information

- Print from Your Computer (Windows)

Related Topics:

- Printer Driver Settings (Windows)

Print as a Poster (Windows)

Enlarge your print size and print the document in poster mode.

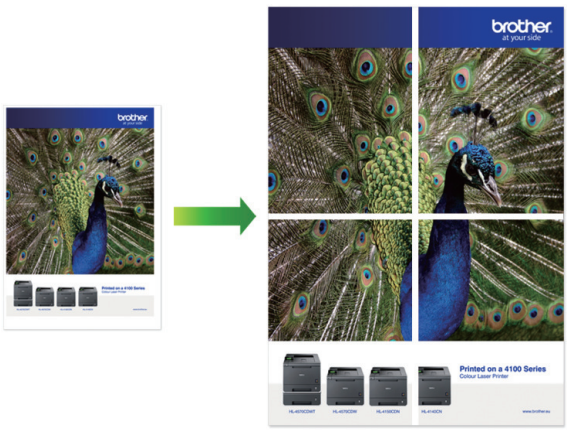

1. Select the print command in your application.
2. Select your model's name, and then click the printer's properties or preferences button.
   The printer driver window appears.
3. Click the **Basic** tab.
4. Click the **Multiple Page** drop-down list, and then select the **1 in 2x2 Pages** or **1 in 3x3 Pages** option.
5. Change other printer settings, if needed.
6. Click **OK**.
7. Complete your print operation.

Related Information

- Print from Your Computer (Windows)

Related Topics:

- Printer Driver Settings (Windows)

Print on Both Sides of the Paper Automatically (Automatic 2-sided Printing) (Windows)

- Make sure the jam clear cover is closed.
- If paper is curled, straighten it and put it back in the paper tray.
- Use regular paper. DO NOT use bond paper.
- If the paper is thin, it may wrinkle.

1. Select the print command in your application.
2. Select your model's name, and then click the printer's properties or preferences button.
   The printer driver window appears.
3. Click the **Basic** tab.
4. In the **Orientation** field, select the **Portrait** or **Landscape** option to set the printout orientation.

   If your application contains a similar setting, we recommend that you set the printout orientation using the application.

5. Click the **2-sided / Booklet** drop-down list, and then select **2-sided**.
6. Click the **2-sided Settings** button.
7. Select one of the options from the **2-sided Type** menu.
   When 2-sided is selected, four types of 2-sided binding are available for each orientation:

Option for Portrait	Description
Long Edge (Left)	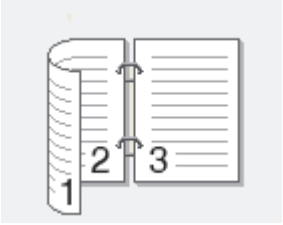
Long Edge (Right)	

Option for Portrait	Description
Short Edge (Top)	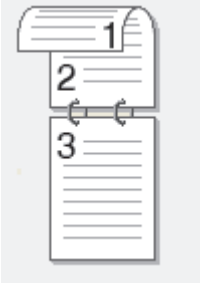
Short Edge (Bottom)	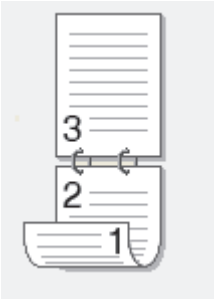

Option for Landscape	Description
Long Edge (Top)	
Long Edge (Bottom)	
Short Edge (Right)	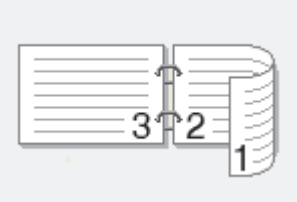
Short Edge (Left)	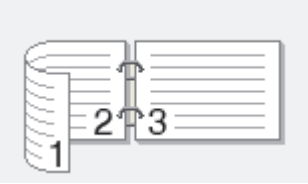

8. Select the **Binding Offset** checkbox to specify the offset for binding in inches or millimetres.
9. Click **OK** to return to the printer driver window.
10. Change other printer settings, if needed.

The Borderless feature is not available when using this option.

11. Click **OK**.

12. Complete your print operation.

Related Information

- Print from Your Computer (Windows)

Related Topics:

- Print as a Booklet Automatically (Windows)
- Printer Driver Settings (Windows)

Print as a Booklet Automatically (Windows)

Use this option to print a document in booklet format using 2-sided printing. The document's pages will be arranged according to the correct page number and will allow you to fold at the centre of the print output without having to change the order of the printed pages.

- Make sure the jam clear cover is closed.
- If paper is curled, straighten it and put it back in the paper tray.
- Use regular paper. DO NOT use bond paper.
- If the paper is thin, it may wrinkle.

1. Select the print command in your application.
2. Select your model's name, and then click the printer's properties or preferences button.
   The printer driver window appears.
3. Click the **Basic** tab.
4. In the **Orientation** field, select the **Portrait** or **Landscape** option to set the printout orientation.

If your application contains a similar setting, we recommend that you set the printout orientation using the application.

5. Click the **2-sided / Booklet** drop-down list, and then select the **Booklet** option.
6. Click the **2-sided Settings** button.
7. Select one of the options from the **2-sided Type** menu.
   There are two types of 2-sided binding directions available for each orientation:

Option for Portrait	Description
Left Binding	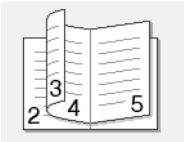
Right Binding	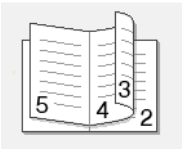

Option for Landscape	Description
Top Binding	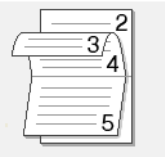
Bottom Binding	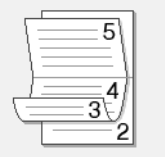

8. Select one of the options from the **Booklet Printing Method** menu.

Option	Description
All Pages at Once	Every page will be printed in booklet format (four pages to every piece of paper, two pages per side). Fold your printout in the middle to create the booklet.
Divide into Sets	This option prints the whole booklet in smaller individual booklet sets, allowing you to fold at the centre of the smaller individual booklet sets without having to change the order of the printed pages. You can specify the number of sheets in each smaller booklet set (from 1-15). This option can be helpful when folding a printed booklet that has a large number of pages.

9. Select the **Binding Offset** checkbox to specify the offset for binding in inches or millimetres.
10. Click **OK** to return to the printer driver window.
11. Change other printer settings, if needed.

The Borderless feature is not available when using this option.

12. Click **OK**.
13. Complete your print operation.

Related Information

- Print from Your Computer (Windows)

Related Topics:

- Print on Both Sides of the Paper Automatically (Automatic 2-sided Printing) (Windows)
- Printer Driver Settings (Windows)

Secure Print (Windows)

Related Models: MFC-J6975DW/MFC-J6977DW

Use Secure Print to ensure that confidential or sensitive documents do not print until you enter a password on the machine's control panel.

The secure data is deleted from the machine when you turn off the machine.

1. Select the print command in your application.
2. Select your model's name, and then click the printer's properties or preferences button.
   The printer driver window appears.
3. Click the **Advanced** tab.
4. Click the **Settings** button in the **Secure Print** field.
5. Select the **Secure Print** checkbox.
6. Type your four-digit password in the **Password** field.
7. Type the user name and job name in the **User Name** and **Job Name** fields, if needed.
8. Click **OK** to close the **Secure Print Settings** window.
9. Click **OK**.
10. Complete your print operation.
11. On the machine's control panel, press ◀ or ▶ to display the `[Secure Print]` option, and then press `[Secure Print]`.
12. Press ▲ or ▼ to display user names, and then press your user name.
13. Enter your four-digit password, and then press `[OK]`.
14. Press ▲ or ▼ to display the print job, and then press it.
15. Enter the number of copies you want.
16. Press `[Start]`.
    The machine prints the data.

The secured data will be cleared from the machine's memory after printing.

Related Information

- Print from Your Computer (Windows)

Print a Colour Document in Greyscale (Windows)

Greyscale mode makes the print processing speed faster than colour mode. If your document contains colour, selecting Greyscale mode prints your document in 256 levels of greyscale.

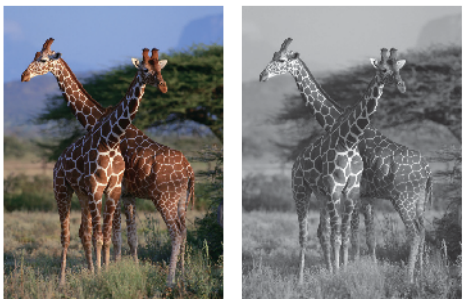

1. Select the print command in your application.
2. Select your model's name, and then click the printer's properties or preferences button.

   The printer driver window appears.
3. Click the **Basic** tab.
4. For **Colour / Greyscale**, select **Greyscale**.
5. Change other printer settings, if needed.
6. Click **OK**.
7. Complete your print operation.

Related Information

- Print from Your Computer (Windows)

Print on Long Paper (Windows)

Related Models: MFC-J3960DW/MFC-J6960DW/MFC-J6975DW/MFC-J6977DW

Make sure you have loaded only **one sheet** of Long paper (Width: 88.9 - 297 mm / Height: 431.9 - 1200 mm) in the MP tray.

1. Select the print command in your application.
2. Select your model's name, and then click the printer's properties or preferences button.

   The printer driver window appears.
3. Click the **Basic** tab.
4. Click the **Media Type** drop-down list, and then select the type of paper you are using.

   IMPORTANT

   To get the best print quality for the settings you have selected, always set the **Media Type** option to match the type of paper you load.
5. Click the **Paper Size** drop-down list, select **User-Defined...**. Enter the width, height, and other information in the **User-Defined Size** window, and then click **OK**.
6. For **Colour / Greyscale**, select the **Colour** or **Greyscale** option.
7. In the **Orientation** field, select the **Portrait** or **Landscape** option to set the printout orientation.

   If your application contains a similar setting, we recommend that you set the printout orientation using the application.
8. Type the number of copies (1-999) you want in the **Copies** field.
9. Change other printer settings, if needed.
10. Click **OK**.
11. Complete your print operation.

IMPORTANT

If the ink cartridges have reached the end of their lives when you are printing on Long paper, you can replace them with new ink cartridges of the same colour and continue printing.

The colour tone may be different after the ink cartridge replacement.

Related Information

- Print from Your Computer (Windows)

Related Topics:

- Load Long Paper in the Multi-purpose Tray (MP Tray)

Print on an Envelope (Windows)

- Make sure you have loaded the correct envelopes in the paper tray. For more information on how to load envelopes, see *Related Information*.
- When you create a document to print on envelopes, set the document size in your application in advance.

1. Select the print command in your application.
2. Select your model's name, and then click the printer's properties or preferences button.

   The printer driver window appears.
3. Click the **Basic** tab.
4. Click the **Media Type** drop-down list, and then select the type of paper you are using.
5. Click the **Paper Size** drop-down list, and then select your envelope size.
6. For **Colour / Greyscale**, select the **Colour** or **Greyscale** option.
7. In the **Orientation** field, select the **Portrait** or **Landscape** option to set the printout orientation.

   If your application contains a similar setting, we recommend that you set the printout orientation using the application.
8. Type the number of copies (1-999) you want in the **Copies** field.
9. Change other printer settings, if needed.
10. Click **OK**.
11. Complete your print operation.

Related Information

- Print from Your Computer (Windows)

Related Topics:

- Load Envelopes in Paper Tray #1
- Load Paper in the Manual Feed Slot

Use a Preset Print Profile (Windows)

Print Profiles are presets designed to give you quick access to frequently-used printing configurations.

1. Select the print command in your application.
2. Select your model's name, and then click the printer's properties or preferences button.
   The printer driver window appears.
3. Click the **Print Profiles** tab.

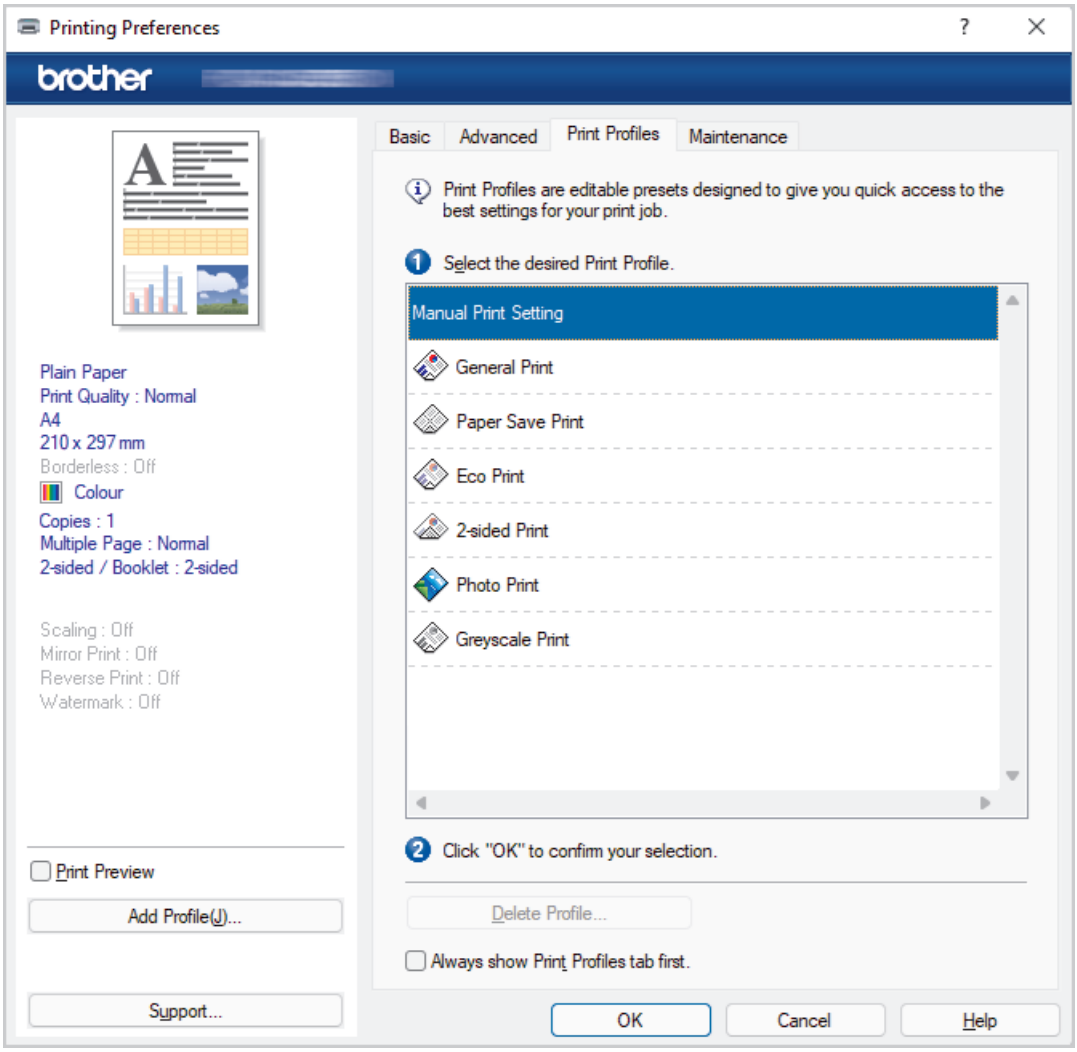

4. Select your profile from the print profile list.
   The profile settings are shown on the left side of the printer driver window.
5. Do one of the following:
   - If the settings are correct for your print job, click **OK**.
   - To change the settings, go back to the **Basic** or **Advanced** tab, change settings, and then click **OK**.

To display the **Print Profiles** tab at the front of the window the next time you print, select the **Always show Print Profiles tab first.** checkbox.

Related Information

- Print from Your Computer (Windows)

Related Topics:

- Printer Driver Settings (Windows)

Change the Default Print Settings (Windows)

When you change an application's print settings, the changes apply only to documents printed with that application. To change print settings for all Windows applications, you must configure the printer driver properties.

1. Hold down the key and press the R key on the computer's keyboard to launch **Run**.
2. Type **"control printers"** in the **Open:** field and click **OK**.

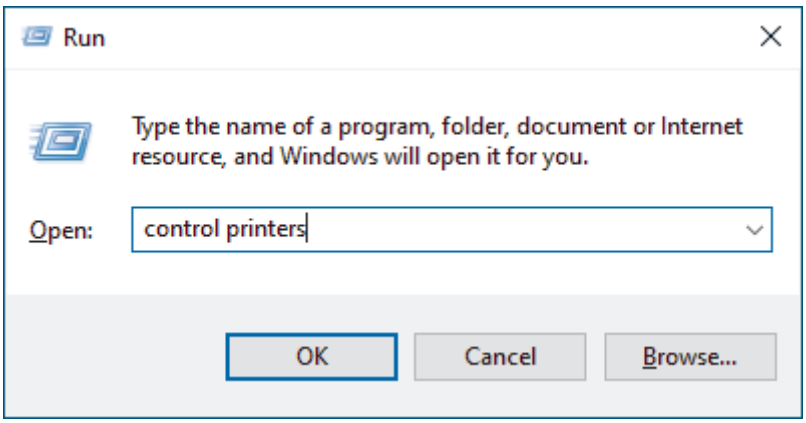

The **Devices and Printers** window appears.

If the **Devices and Printers** window does not appear, click **Devices** > **More devices and printer settings**.

3. Right-click your model's icon, and then select **Printer properties**. (If the printer driver options appear, select your printer driver.)

   The printer properties dialog box appears.
4. Click the **General** tab, and then click the **Printing Preferences...** or **Preferences...** button.

   The printer driver dialog box appears.
5. Select the print settings you want to use as the default for all of your Windows programs.
6. Click **OK**.
7. Close the printer properties dialog box.

Related Information

- Print from Your Computer (Windows)

Related Topics:

- Printer Driver Settings (Windows)

Printer Driver Settings (Windows)

- When you change an application's print settings, the changes only apply to documents printed with that application.

  For more information, see *Related Information*: *Print a Document (Windows)*.
- To change the default print settings, you must configure the printer driver properties.

  For more information, see *Related Information*: *Change the Default Print Settings (Windows)*.

>> **Basic** Tab
>> **Advanced** Tab

Basic Tab

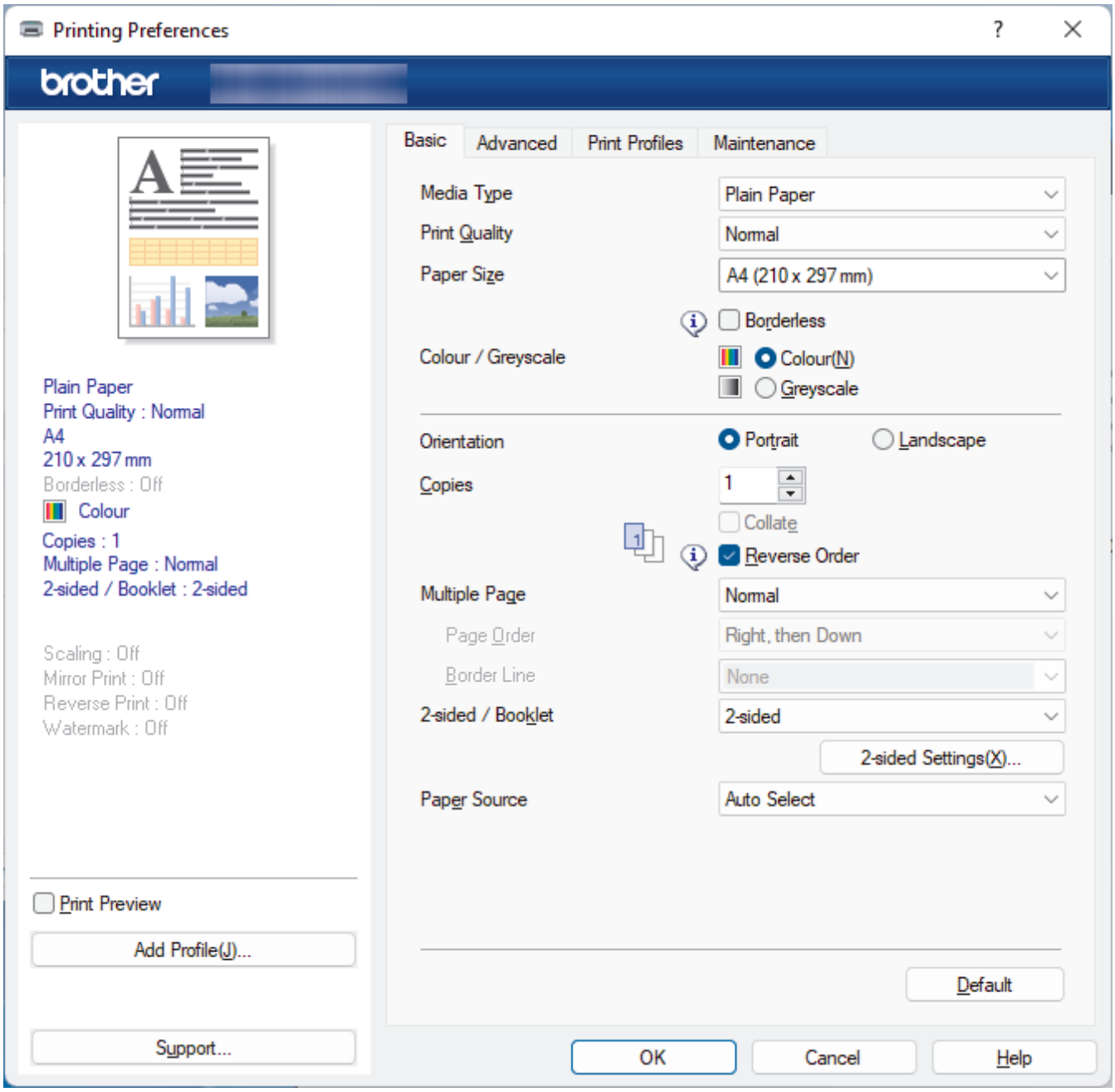

1. **Media Type**

   Select the media type you want to use. To achieve the best print results, the machine automatically adjusts its print settings according to the selected media type.

2. **Print Quality**

   Select the print quality you want. Because print quality and speed are related, the higher the quality, the longer it will take to print the document.

3. **Paper Size**

   Select the paper size you want to use. You can either choose from standard paper sizes or create a custom paper size.

   Borderless

   Select this option to print photos without borders. Because the image data is created slightly larger than the paper size you are using, this will cause some cropping of the photo edges.

   You may not be able to select the Borderless option for some combinations of media type and quality, or from some applications.

4. **Colour / Greyscale**

   Select colour or greyscale printing. The print speed is faster in greyscale mode than it is in colour mode. If your document contains colour and you select greyscale mode, your document will be printed using 256 levels of greyscale.

5. **Orientation**

   Select the orientation (portrait or landscape) of your printout.

   If your application contains a similar setting, we recommend that you set the orientation using the application.

6. **Copies**

   Type the number of copies (1-999) that you want to print in this field.

   Collate

   Select this option to print sets of multi-page documents in the original page order. When this option is selected, one complete copy of your document will print, and then reprint according to the number of copies you choose. If this option is not selected, then each page will print according to the number of copies chosen before the next page of the document is printed.

   Reverse Order

   Select this option to print your document in reverse order. The last page of your document will be printed first.

7. **Multiple Page**

   Select this option to print multiple pages on a single sheet of paper, or print one page of your document on multiple sheets.

   Page Order

   Select the page order when printing multiple pages on a single sheet of paper.

   Border Line

   Select the type of border to use when printing multiple pages on a single sheet of paper.

8. **2-sided / Booklet**

   Select this option to print on both sides of the paper, or print a document in booklet format using 2-sided printing.

   2-sided Settings button

   Click this button to select the type of 2-sided binding. Four types of 2-sided bindings are available for each orientation.

9. **(MFC-J3960DW/MFC-J6960DW/MFC-J6975DW/MFC-J6977DW) Paper Source**

   Select the paper source setting according to your print conditions or purpose.

Advanced Tab

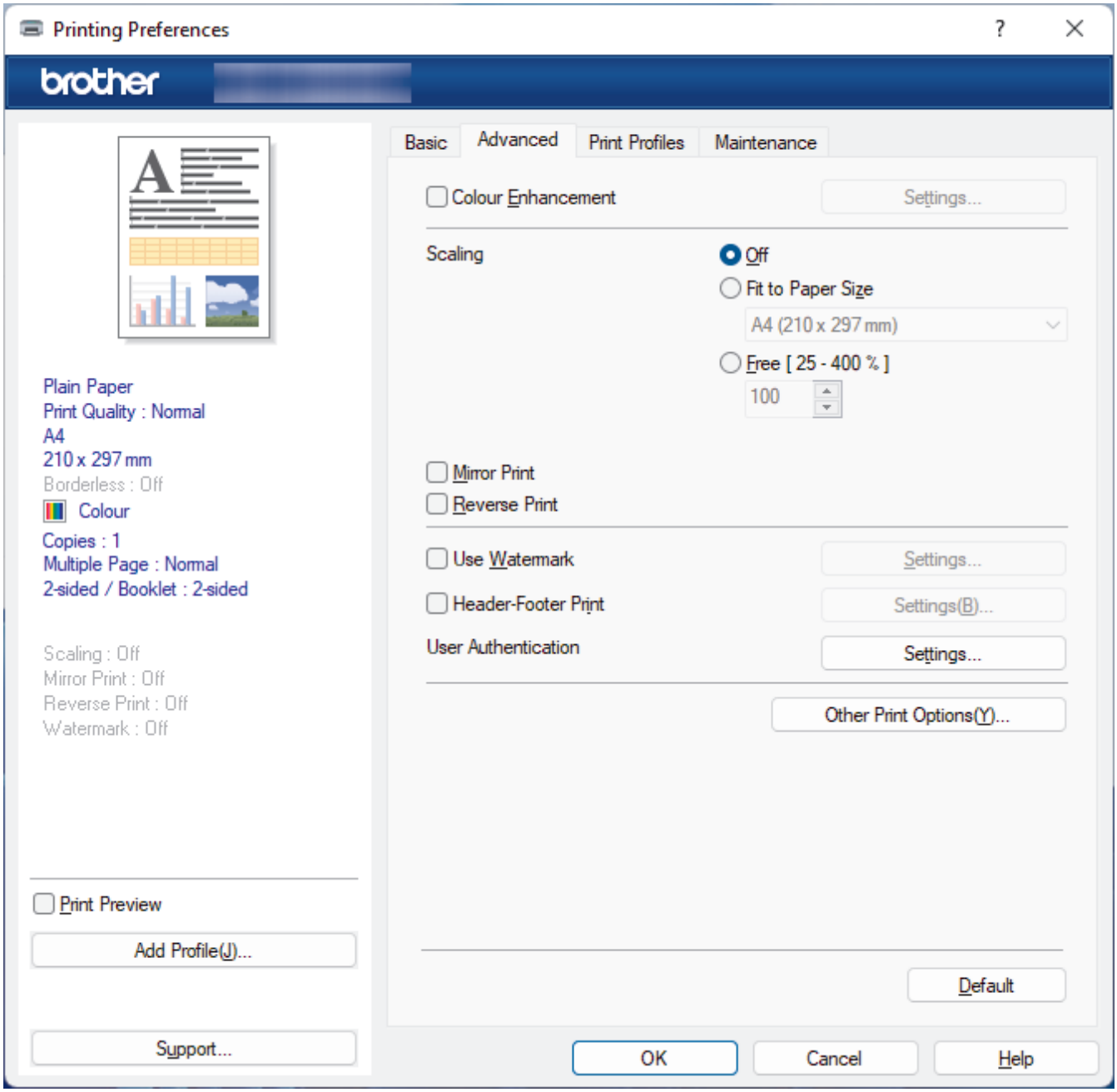

1. **Colour Enhancement**

   Select this option to use the Colour Enhancement feature. This feature analyses your image to improve its sharpness, white balance and colour density. This process may take several minutes depending on the image size and your computer's specifications.

2. **Scaling**

   Select these options to enlarge or reduce the size of the pages in your document.

   Fit to Paper Size

   Select this option to enlarge or reduce the document pages to fit a specified paper size. When you select this option, select the paper size you want from the drop-down list.

   Free [25 - 400 %]

   Select this option to enlarge or reduce the document pages manually. When you select this option, type a value into the field.

3. **Mirror Print**

   Select this option to reverse the printed image on the page horizontally from left to right.

4. **Reverse Print**

   Select this option to rotate the printed image 180 degrees.

5. **Use Watermark**

   Select this option to print a logo or text on your document as a watermark. Select one of the preset watermarks, add a new watermark, or use an image file you have created.

6. **Header-Footer Print**

   Select this option to print the date, time, and login user name on the document.

7. **(MFC-J6975DW/MFC-J6977DW) Secure Print**

   This feature ensures that confidential or sensitive documents are not printed out until you enter a password on the machine's control panel.

8. **User Authentication**

   This feature allows you to confirm the restrictions for each user.

9. **Other Print Options button**

   Advanced Colour Settings

   Select the method that the machine uses to arrange dots to express halftones.

   Reduce Smudge

   Some types of print media may need more drying time. Change this option if you have problems with smudged printouts or paper jams.

   Retrieve Printer's Colour Data

   Select this option to optimise the print quality using the machine's factory settings, which are set specifically for your Brother machine. Use this option when you have replaced the machine or changed the machine's network address.

   Print Archive

   Select this option to save the print data as a PDF file to your computer.

   Reduce Uneven Lines

   Select this option to adjust the print alignment if your printed text becomes blurred or images become faded.

Related Information

- Print from Your Computer (Windows)

Related Topics:

- Print a Photo (Windows)
- Print a Document (Windows)
- Print More Than One Page on a Single Sheet of Paper (N in 1) (Windows)
- Print as a Poster (Windows)
- Print on Both Sides of the Paper Automatically (Automatic 2-sided Printing) (Windows)
- Print as a Booklet Automatically (Windows)
- Use a Preset Print Profile (Windows)
- Change the Default Print Settings (Windows)
- Change the Print Options to Improve Your Print Results

Print from Your Computer (Mac)

- Print Using AirPrint (macOS)

Print Using Brother iPrint&Scan (Windows/Mac)

- Print Photos or Documents Using Brother iPrint&Scan (Windows/Mac)
- Print on Both Sides of the Paper Automatically Using Brother iPrint&Scan (Automatic 2-sided Printing) (Windows/Mac)
- Print More Than One Page on a Single Sheet of Paper Using Brother iPrint&Scan (N in 1) (Windows/Mac)
- Print a Colour Document in Greyscale Using Brother iPrint&Scan (Windows/Mac)

Print Photos or Documents Using Brother iPrint&Scan (Windows/Mac)

- Make sure you have loaded the correct media in the paper tray.
- For best results, we recommend using Brother paper.
- When printing on photo paper, load one extra sheet of the same photo paper in the paper tray.
- MFC-J3960DW/MFC-J6960DW/MFC-J6975DW/MFC-J6977DW:

  When printing on A5 or A6 size plain paper using the MP tray, load one extra sheet of the same size paper in the tray.

1. Start Brother iPrint&Scan.
   - Windows

     Double-click the (**Brother iPrint&Scan**) icon.
   - Mac

     In the **Finder** menu bar, click **Go** > **Applications**, and then double-click the iPrint&Scan icon.

   The Brother iPrint&Scan screen appears.
2. If your Brother machine is not selected, click the **Add Machine** / **Select your Machine** button, and then select your model's name from the list. Click **OK**.
3. Click **Print**.
4. Select the document type.
5. Select the file you want to print, and then do one of the following:
   - Windows

     Click **Next**.
   - Mac

     Click **Open**, and then click **Next** if prompted.

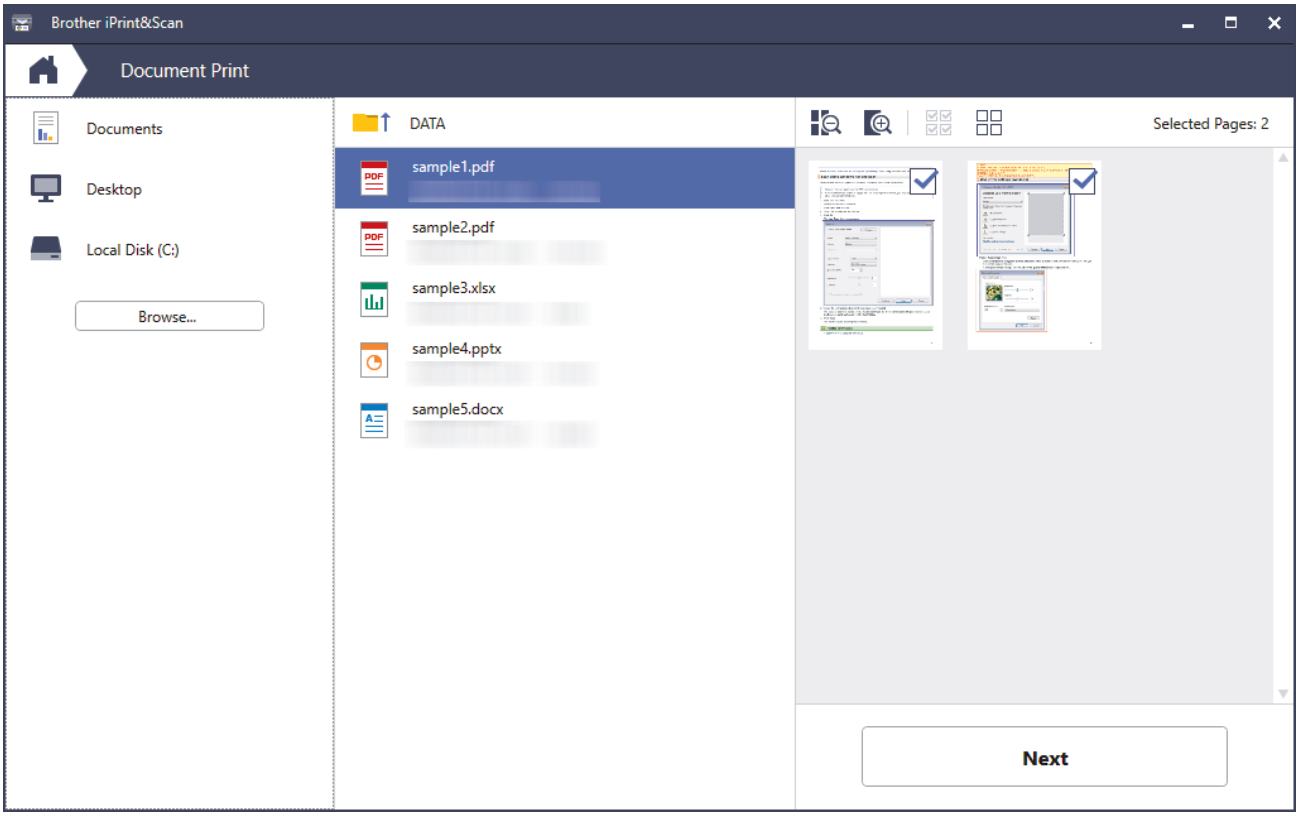

- The screen that appears may differ, depending on the software version.
- Use the latest version of Brother iPrint&Scan. See *Related Information*.
- When printing documents with many pages, you can also select the pages you want to print.

6. Change other printer settings, if needed.
7. Click **Print**.

IMPORTANT

For photo printing:

To get the best print quality for the settings you have selected, always set the **Media Type** option to match the type of paper you load.

Related Information

- Print Using Brother iPrint&Scan (Windows/Mac)

Related Topics:

- Access Brother iPrint&Scan (Windows/Mac)

Print on Both Sides of the Paper Automatically Using Brother iPrint&Scan (Automatic 2-sided Printing) (Windows/Mac)

- Make sure the jam clear cover is closed.
- If paper is curled, straighten it and put it back in the paper tray.
- Use regular paper. DO NOT use bond paper.
- If the paper is thin, it may wrinkle.

1. Start Brother iPrint&Scan.
   - Windows

     Double-click the (**Brother iPrint&Scan**) icon.
   - Mac

     In the **Finder** menu bar, click **Go** > **Applications**, and then double-click the iPrint&Scan icon.

   The Brother iPrint&Scan screen appears.
2. If your Brother machine is not selected, click the **Add Machine** / **Select your Machine** button, and then select your model's name from the list. Click **OK**.
3. Click **Print**.
4. Click **Document** / **PDF**.
5. Select the file you want to print, and then do one of the following:
   - Windows

     Click **Next**.
   - Mac

     Click **Open**, and then click **Next** if prompted.

When printing documents with many pages, you can also select the pages you want to print.

6. Select one of the options from the **2-sided** drop-down list.

   Two types of 2-sided binding are available:

Option	Description
On (Flip on long edge)	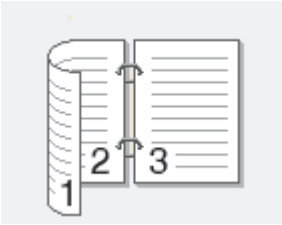

Option	Description
On (Flip on short edge)	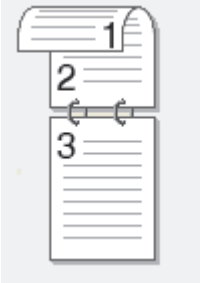

7. Change other printer settings, if needed.
8. Click **Print**.

Related Information

- Print Using Brother iPrint&Scan (Windows/Mac)

Print More Than One Page on a Single Sheet of Paper Using Brother iPrint&Scan (N in 1) (Windows/Mac)

1. Start Brother iPrint&Scan.
   - Windows

     Double-click the (**Brother iPrint&Scan**) icon.
   - Mac

     In the **Finder** menu bar, click **Go** > **Applications**, and then double-click the iPrint&Scan icon.

   The Brother iPrint&Scan screen appears.
2. If your Brother machine is not selected, click the **Add Machine** / **Select your Machine** button, and then select your model's name from the list. Click **OK**.
3. Click **Print**.
4. Click **Document** / **PDF**.
5. Select the file you want to print, and then do one of the following:
   - Windows

     Click **Next**.
   - Mac

     Click **Open**, and then click **Next** if prompted.

When printing documents with many pages, you can also select the pages you want to print.

6. Click the **Layout** drop-down list, and then select the number of pages to print on each sheet.
7. Change other printer settings, if needed.
8. Click **Print**.

Related Information

- Print Using Brother iPrint&Scan (Windows/Mac)

Print a Colour Document in Greyscale Using Brother iPrint&Scan (Windows/Mac)

Greyscale mode makes the print processing speed faster than colour mode. If your document contains colour, selecting Greyscale mode prints your document in 256 levels of greyscale.

1. Start Brother iPrint&Scan.
   - Windows

     Double-click the (**Brother iPrint&Scan**) icon.
   - Mac

     In the **Finder** menu bar, click **Go** > **Applications**, and then double-click the iPrint&Scan icon.

   The Brother iPrint&Scan screen appears.
2. If your Brother machine is not selected, click the **Add Machine** / **Select your Machine** button, and then select your model's name from the list. Click **OK**.
3. Click **Print**.
4. Select the document type.
5. Select the file you want to print, and then do one of the following:
   - Windows

     Click **Next**.
   - Mac

     Click **Open**, and then click **Next** if prompted.

When printing documents with many pages, you can also select the pages you want to print.

6. Click the **Colour / Mono** drop-down list, and then select the **Mono** option.
7. Change other printer settings, if needed.
8. Click **Print**.

Related Information

- Print Using Brother iPrint&Scan (Windows/Mac)

Print Data Directly from a USB Flash Drive

- Print Photos Directly from a USB Flash Drive
- Print a PDF File Directly from a USB Flash Drive

Print Photos Directly from a USB Flash Drive

Even if your machine is not connected to your computer, you can print photos directly from a USB Flash memory drive.

- Important Information about Photo Printing
- Preview and Print Photos from a USB Flash Drive
- Print a Photo Index Sheet (Thumbnails) from a USB Flash Drive
- Print Photos by Image Number
- Print Settings for Photos

Important Information about Photo Printing

Your machine is designed to be compatible with modern digital camera image files and USB flash drives. Read the points below to avoid photo printing problems:

- The image file extension must be .JPG (other image file extensions like .JPEG, .TIF, .GIF and so on will not be recognised).
- Direct photo printing must be performed separately from photo printing operations using the computer. (Simultaneous operation is not available.)
- The machine can read up to 999 files [1] on a USB flash drive.

Be aware of the following:

- When printing an index sheet or image, the machine will print all the valid images, even if one or more images have been corrupted. Corrupted images will not be printed.
- Your machine supports USB flash drives that have been formatted by Windows.

Related Information

- Print Photos Directly from a USB Flash Drive

1 The folder inside USB flash drives is also counted.

Preview and Print Photos from a USB Flash Drive

You can preview your photos on the LCD before printing them, or print images stored on a USB flash drive.

If your photos are large files, there may be a delay before each photo is displayed.

1. Insert a USB flash drive in the USB slot.

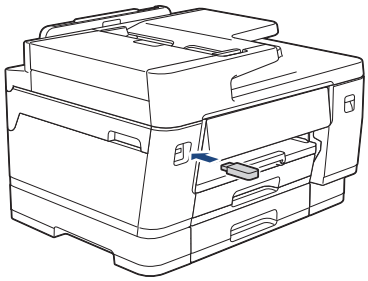

When the machine is in Sleep mode, the touchscreen does not display any information even if you connect a USB flash drive to the USB slot. Press the touchscreen to wake up the machine.

2. Press [JPEG Print] > [Select Files].
3. Press ◀ or ▶ to display the photo you want to print, and then press it.

To print all photos, press [Print All], and then press [Yes] to confirm.

4. Enter the number of copies in one of the following ways:
   - Press [-] or [+] on the touchscreen.
   - Press ×01 to display the keyboard on the touchscreen, and then enter the number of copies using the touchscreen keyboard. Press [OK].
5. Press [OK].
6. Repeat the last three steps until you have selected all the photos you want to print.
7. Press [OK].
8. Read and confirm the displayed list of options.
9. To change the print settings, press [Print Settings].

   When finished, press [OK].
10. Press [Start].

Related Information

- Print Photos Directly from a USB Flash Drive

Related Topics:

- Print Settings for Photos

Print a Photo Index Sheet (Thumbnails) from a USB Flash Drive

Print a photo Index Sheet to see small preview versions of all pictures on your USB flash drive.

- The machine assigns numbers for images (such as No.1, No.2, No.3, and so on).

  The machine does not recognise any other numbers or file names that your digital camera or computer has used to identify the pictures.
- Only file names that are 20 characters or less will be printed correctly on the index sheet.
- File names cannot be printed correctly if they contain non-alphanumeric characters, but non-alphanumeric characters do not affect photo print settings.

1. Insert a USB flash drive in the USB slot.

   When the machine is in Sleep mode, the touchscreen does not display any information even if you connect a USB flash drive to the USB slot. Press the touchscreen to wake up the machine.
2. Press [JPEG Print] > [Index Print] > [Print Index Sheet].
3. If you want to change the print settings, press [Print Settings].

   When finished, press [OK].

Option	Description
Paper Type	Select the paper type.
Paper Size	Select the paper size.

4. Press [Start].

Related Information

- Print Photos Directly from a USB Flash Drive

Related Topics:

- Print Photos by Image Number

Print Photos by Image Number

Before you can print an individual image, you must print the photo Index Sheet (thumbnails) to know the image number.

1. Insert a USB flash drive in the USB slot.

When the machine is in Sleep mode, the touchscreen does not display any information even if you connect a USB flash drive to the USB slot. Press the touchscreen to wake up the machine.

2. Press [JPEG Print] > [Index Print] > [Print Photos].
3. Enter the image numbers you want to print using the touchscreen. After you have selected the image numbers, press [OK].

- Enter multiple numbers at one time using a comma or a hyphen. For example, enter **1, 3, 6** to print images No.1, No.3 and No.6. Print a range of images using a hyphen. For example, enter **1-5** to print images No.1 to No.5.
- Enter up to 12 characters (including commas and hyphens) for the image numbers you want to print.

4. Enter the number of copies in one of the following ways:
   - Press [-] or [+] on the touchscreen.
   - Press ×01 to display the keyboard on the touchscreen, and then enter the number of copies using the touchscreen keyboard. Press [OK].
5. To change the print settings, press [Print Settings].

   When finished, press [OK].
6. Press [Start].

Related Information

- Print Photos Directly from a USB Flash Drive

Related Topics:

- Print a Photo Index Sheet (Thumbnails) from a USB Flash Drive
- Print Settings for Photos

Print Settings for Photos

Press [Print Settings] to display the settings shown in the table.

Option	Description
Print Quality	Select the print resolution for your type of document.
(MFC-J3960DW/MFC-J6960DW/ MFC-J6975DW/MFC-J6977DW) Select Tray	Select the tray.
Paper Type	Select the paper type.
Paper Size	Select the paper size.
Print Layout	Select the print layout.
Brightness	Adjust the brightness.
Contrast	Adjust the contrast. Increasing the contrast will make an image look sharper and more vivid.
Cropping	Crop the image around the margin to fit the paper size or print size. • The factory setting is On. To print the entire image, change this setting to Off. • If you set the Cropping setting to Off, set the Borderless setting to Off, also. **Cropping: On** 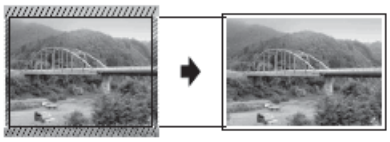 **Cropping: Off** 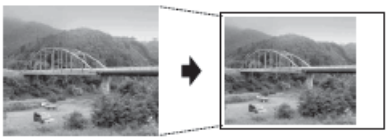
Borderless	Expand the printable area to fit the edges of the paper. Printing time will be slower.
Date Print	Print the date on your photo. The date will be printed in the lower-right corner. To use this setting, the photo data must include the date.
Set New Default	Save the print settings you use most often by setting them as the defaults.
Factory Reset	Restore any changed print settings back to the factory settings.

Related Information

- Print Photos Directly from a USB Flash Drive

Related Topics:

- Preview and Print Photos from a USB Flash Drive
- Print Photos by Image Number

Print a PDF File Directly from a USB Flash Drive

Related Models: MFC-J6975DW/MFC-J6977DW

You can print a PDF file directly from a USB flash drive.

PDF files that are 2 GB or more cannot be printed.

IMPORTANT

To prevent damage to your machine, DO NOT connect any device other than a USB flash drive to the USB direct interface.

1. Insert a USB flash drive in the USB slot.

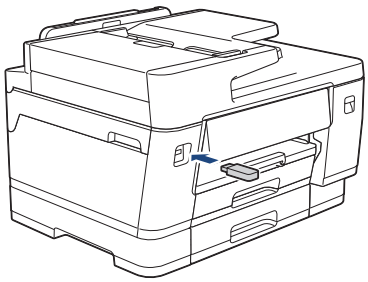

When the machine is in Sleep mode, the touchscreen does not display any information even if you connect a USB flash drive to the USB slot. Press the touchscreen to wake up the machine.

2. Press [PDF Print].

If your machine has been set to Secure Function Lock On, you may not be able to access Direct Print.

3. Press ▲ or ▼ to display the PDF file you want to print, and then press it.
4. Enter the number of copies in one of the following ways:
   - Press [-] or [+] on the touchscreen.
   - Press ×001 to display the keyboard on the touchscreen, and then enter the number of copies using the touchscreen keyboard. Press [OK].
5. Read and confirm the displayed list of options.
6. To change the print settings, press [Print Settings].

   When finished, press [OK].

Option	Description
Print Quality	Select the print resolution for your type of document.
Select Tray	Select the tray.
Paper Size	Select the paper size.
Multiple Page	Set this option to print multiple pages on a single sheet of paper or print one page of your document on multiple sheets.
2-sided	Select the type of 2-sided binding.

Option	Description
Collate	Set this option to On to print sets of multi-page documents in the original page order.
PDF Option	Select this option to print a PDF file with the markups or stamps.
Set New Default	Save the print settings you use most often by setting them as the defaults.
Factory Reset	Restore any changed print settings back to the factory settings.

7. Press [Mono Start] or [Colour Start].

IMPORTANT

DO NOT remove the USB flash drive from the USB direct interface until the machine has finished printing.

Related Information

- Print Data Directly from a USB Flash Drive

Print an Email Attachment

You can print files by emailing them to your Brother machine.

- You can attach up to 10 documents, 20 MB in total, to an email.
- This feature supports the following formats:
  - Document files: PDF, TXT, Microsoft Word files, Microsoft Excel files, and Microsoft PowerPoint files
  - Image files: JPEG, BMP, GIF, PNG, and TIFF
- The machine prints both the email content and attachments by default. To print only email attachments, change the settings as necessary.

1. Press ◀ or ▶ to display [Apps].

   Press [Apps].

   - If information regarding the Internet connection appears on the machine's LCD, read it, and then press [OK].
   - Occasionally, updates or announcements about Brother Web Connect's features will appear on the LCD. Read the information, and then press [OK].

2. Press ▲ or ▼ to display the [Email Print] option, and then press it.

   - If this function is locked, contact your Network Administrator for access.
   - If information regarding [Email Print] appears, read it, and then press [OK].

3. Press [Enable].

   Follow the on-screen instructions. Email Print is enabled, and then the machine prints the Instruction Sheet.

4. Send your email to the email address included on the sheet. The machine prints the email attachments.

   - You can confirm the email address in the machine's menu.

     Press [Apps] > [Email Print] > [Machine Address].
   - To confirm or change settings, including email address and printer settings, access Web Based Management, click **Online Functions** > **Online Functions Settings** in the left navigation bar, and then click the **Online Functions Settings Page** button.

Related Information

- Print

Related Topics:

- Access Web Based Management

Universal Print

- Universal Print Overview
- Configure Universal Print
- Add a Universal Print-enabled Printer to Your Computer
- Deregister Your Machine from Universal Print

Universal Print Overview

Universal Print is a cloud-based print service from Microsoft. You can print documents, from anywhere on the Internet, without installing a printer driver. Universal Print is available for Azure Active Directory (Azure AD) users with a Microsoft 365 subscription.

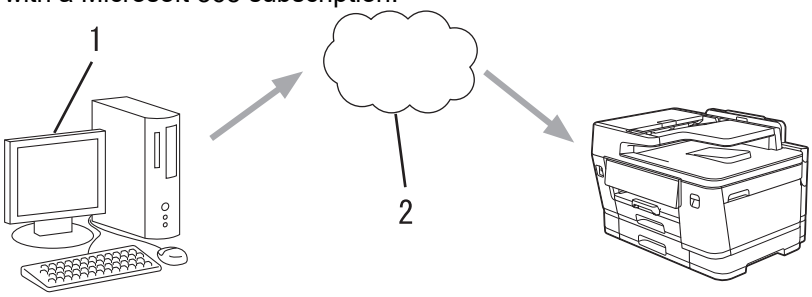

1. Computer running Windows 10 20H1 or greater
2. Cloud server

Related Information

- Universal Print

Configure Universal Print

- Make sure you set the correct date and time for your time zone.
- If your network uses a proxy server, configure the proxy server settings.

Register Your Machine with Universal Print Using Web Based Management

1. Start Web Based Management. See Access Web Based Management.
2. In the left navigation bar, click **Network** > **Network** > **Protocol**.

If the left navigation bar is not visible, start navigating from ≡.

3. Select the **Universal Print** checkbox, and then click **Advanced Settings**.
4. Change your machine's name in the **Device Name** field if necessary.

Using the following characters: ?, /, \, ", :, <, >, | or * may cause a sending error.

5. Click **Register**.
6. A Universal Print user code appears. Click the **Sign in** button, and then type the user code.
7. Follow the on-screen instructions to finish the registration.

Assign Universal Print Users via Microsoft Azure Portal

8. Access the Microsoft Azure portal.
   URL: portal.azure.com
9. Log in as a Printer Administrator.
10. Select the **Universal Print** service.
11. Select the **Printers** option, and then select your machine from the list.
12. Select the **Share** option.
13. Select the users you want to assign to the Universal Print service, and then click **Share printer**.

Related Information

- Universal Print

Related Topics:

- Access Web Based Management
- Configure Date and Time Using Web Based Management
- Configure the Proxy Server Settings Using Web Based Management

Add a Universal Print-enabled Printer to Your Computer

1. Do one of the following:
   - For Windows 11
     a. Click > **Settings** > **Bluetooth & devices** > **Printers & scanners** > **Add device**.
     b. Select **Work or school** from the **Show printers and scanners associated with my** drop-down list.
   - For Windows 10
     a. Click > > **Devices** > **Printers & scanners** > **Add a printer or scanner**.
     b. Select **Work or school printer & scanner** from the drop-down list.
2. Select your machine registered as a Universal Print-enabled printer from the list, and then click **Add device**.

You can now print with the machine you registered as a Universal Print-enabled printer.

Related Information

- Universal Print

Deregister Your Machine from Universal Print

To deregister your machine, you must delete it from Web Based Management, and then delete it on the Microsoft Azure portal.

1. Start Web Based Management. See Access Web Based Management.
2. In the left navigation bar, click **Network** > **Network** > **Protocol**.

   If the left navigation bar is not visible, start navigating from ≡.

3. Next to the **Universal Print** checkbox, click **Advanced Settings**.
4. Click **Delete Registration Data**, and then follow the on-screen instructions.
5. Access the Microsoft Azure portal.

   URL: portal.azure.com
6. Log in as a Printer Administrator.
7. Select the **Universal Print** service.
8. Select the **Printers** option, and then select your machine from the list.
9. Click **Delete printer share**, and then click **OK**.
10. Click **Unregister**, and then click **OK**.

Related Information

- Universal Print

Related Topics:

- Access Web Based Management

Cancel a Print Job

1. Press ✕.

To cancel multiple print jobs, press and hold ✕ for about four seconds.

Related Information

- Print

Scan

- Scan Using the Scan Button on Your Machine
- Scan Using Brother iPrint&Scan (Windows/Mac)
- Scan from Your Computer (Windows)
- Scan from Your Computer (Mac)
- Configure Scan Settings Using Web Based Management

Scan Using the Scan Button on Your Machine

- Configure the Scan Button on Your Machine
- Scan Multi-page A4 or Letter Size Documents
- Scan Photos and Graphics
- Scan Documents as a Single PDF File
- Save Scanned Data to a USB Flash Drive
- Scan Multiple Business Cards and Photos (Auto Crop)
- Scan to an Editable Text File Using OCR
- Save Scanned Data as an Email Attachment
- Send Scanned Data to an Email Recipient
- Scan to FTP
- Scan to SSH Server (SFTP)
- Scan to Network (Windows)
- Scan to SharePoint
- Web Services for Scanning on Your Network (Windows)

Configure the Scan Button on Your Machine

To scan using your machine's Scan button, add your machine to Brother iPrint&Scan.

1. Go to your model's **Downloads** page at support.brother.com/downloads, and then download and install the software compatible with your operating system (Windows or Mac).
   - Windows:

     Download and install the **EasySetup** software package or **Full Driver & Software Package**. Brother iPrint&Scan is included in this installation.
   - Mac:

     Download and install the **Brother iPrint&Scan** application and the **iPrint&Scan Push Scan Tool**.
2. Start Brother iPrint&Scan.
   - Windows:

     Double-click the (**Brother iPrint&Scan**) icon on your computer's desktop.
   - Mac:

     In the **Finder** menu bar, click **Go** > **Applications**, and then double-click the iPrint&Scan icon.

   The Brother iPrint&Scan screen appears.
3. If your Brother machine is not selected, click the **Add Machine** / **Select your Machine** button, and then follow the on-screen instructions to select your Brother machine.
4. Click the **Machine Scan Settings** button, and then follow the on-screen instructions to change the scan settings, including file type and file storage location.

Related Information

- Scan Using the Scan Button on Your Machine

Scan Multi-page A4 or Letter Size Documents

When scanning a multi-page A4 or Letter size document into a single file such as a PDF, the scan result depends on how to place the document.

- To get the scan result in landscape orientation, load the document into the ADF long edge first or place it on the scanner glass with the long edge aligned with the left side of the scanner glass.
- To get the scan result in portrait orientation, load the document into the ADF short edge first or place it on the scanner glass with the short edge aligned with the left side of the scanner glass.

How to Place the Document	Scan Result
Long edge first **ADF** 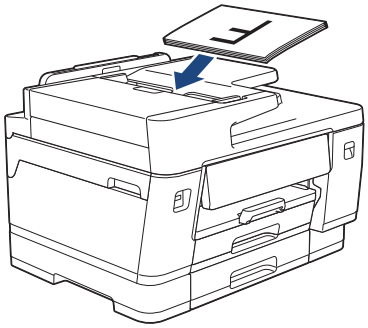 **Scanner glass** 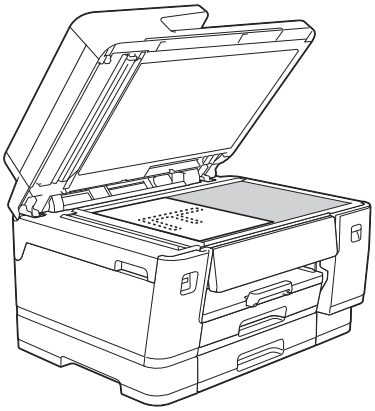	Landscape 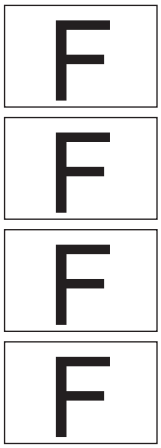
Short edge first **ADF** 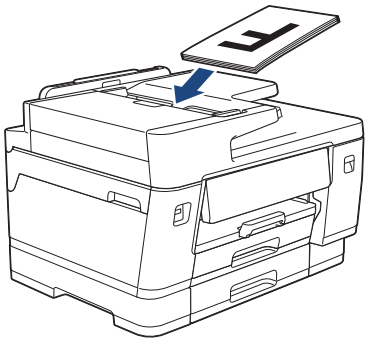 **Scanner glass** 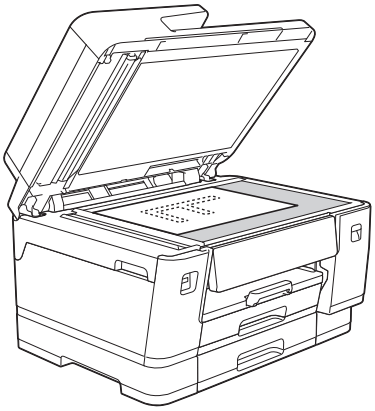	Portrait 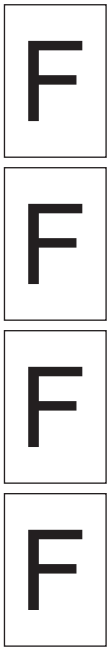

Related Information

- Scan Using the Scan Button on Your Machine

Scan Photos and Graphics

Send scanned photos or graphics directly to your computer.

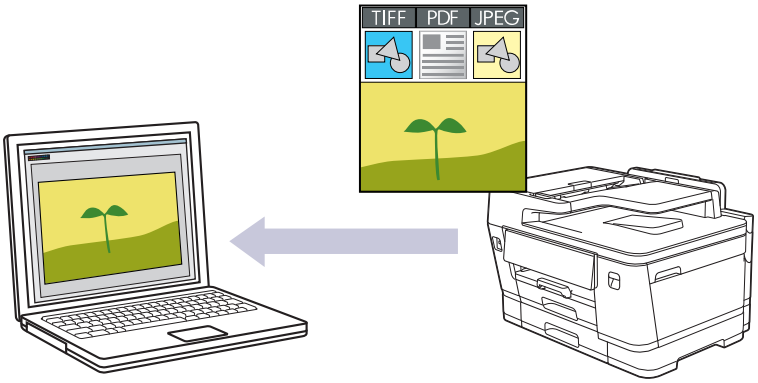

- **To scan from your machine:**

  You must first configure the Scan button on your machine, including settings such as file type and file storage location. See *Related Information*: *Configure the Scan Button on Your Machine.*
- **To scan from your computer:**

  See *Related Information*: *Scan Using Brother iPrint&Scan (Windows/Mac).*

1. Load your document.
2. Press [Scan] > [to PC] > [to Image].
3. If the machine is connected over the network, press ▲ or ▼ to display the computer where you want to send data, and then select the computer name.

   If the LCD message prompts you to enter a PIN, use the LCD to enter the four-digit PIN for the computer, and then press [OK].

4. To change the settings, press [Options].

   To use [Options], you must connect a computer with Brother iPrint&Scan installed to the machine.

5. Press [Scan Settings] > [Set at Device].
6. Select the scan settings you want to change, and then press [OK].

Option	Description
2-sided Scan (MFC-J3960DW/MFC-J6760DW/ MFC-J6960DW/MFC-J6975DW/ MFC-J6977DW)	Select the 2-sided scan mode.
Colour Setting	Select the colour format for your document.
Resolution	Select the scan resolution for your document.
File Type	Select the file format for your document.
Document Size	Select your document size.
Brightness	Select the brightness level.
Contrast	Select the contrast level.

Option	Description
Auto Deskew	Correct any skewed documents when they are scanned.
Skip Blank Page	When On is selected, blank pages are skipped.
Skip Blank Page Sensitivity	Select the sensitivity level for detecting blank pages in the scanned data. The higher the sensitivity, the easier it is for the machine to detect blank pages.
Remove Background Colour	Change the amount of background colour that is removed.
Margin Settings	Adjust your document's margins.

To save the settings as a shortcut, press [Save as Shortcut]. You will be asked if you want to make this a One Touch Shortcut. Follow the LCD instructions.

7. Press [Start].

   The machine starts scanning. If using the machine's scanner glass, follow the LCD instructions to complete the scanning job.

Related Information

- Scan Using the Scan Button on Your Machine

Related Topics:

- Configure the Scan Button on Your Machine
- Scan Using Brother iPrint&Scan (Windows/Mac)

Scan Documents as a Single PDF File

Combine multiple pages into a single PDF document.

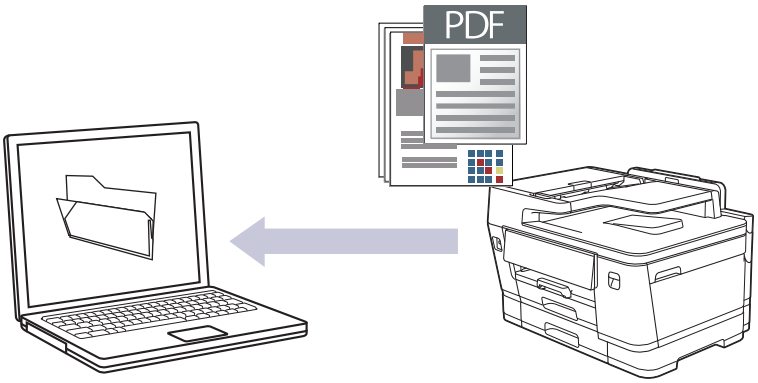

- **To scan from your machine:**

  You must first configure the Scan button on your machine, including settings such as file type and file storage location. See *Related Information*: *Configure the Scan Button on Your Machine*.
- **To scan from your computer:**

  See *Related Information*: *Scan Using Brother iPrint&Scan (Windows/Mac)*.

When scanning multiple pages to a PDF file, set the file type on your machine to `[PDF Multi-Page]`.

1. Load your document.
2. Press `[Scan]` > `[to PC]` > `[to File]`.
3. If the machine is connected over the network, press ▲ or ▼ to display the computer where you want to send data, and then select the computer name.

   If the LCD message prompts you to enter a PIN, use the LCD to enter the four-digit PIN for the computer, and then press `[OK]`.
4. To change the settings, press `[Options]`.

   To use `[Options]`, you must connect a computer with Brother iPrint&Scan installed to the machine.
5. Press `[Scan Settings]` > `[Set at Device]`.
6. Select the scan settings you want to change, and then press `[OK]`.

Option	Description
`2-sided Scan` (MFC-J3960DW/MFC-J6760DW/ MFC-J6960DW/MFC-J6975DW/ MFC-J6977DW)	Select the 2-sided scan mode.
`Colour Setting`	Select the colour format for your document.
`Resolution`	Select the scan resolution for your document.
`File Type`	Select the file format for your document.
`Document Size`	Select your document size.
`Brightness`	Select the brightness level.

Option	Description
Contrast	Select the contrast level.
Auto Deskew	Correct any skewed documents when they are scanned.
Skip Blank Page	When On is selected, blank pages are skipped.
Skip Blank Page Sensitivity	Select the sensitivity level for detecting blank pages in the scanned data. The higher the sensitivity, the easier it is for the machine to detect blank pages.
Remove Background Colour	Change the amount of background colour that is removed.
Margin Settings	Adjust your document's margins.

To save the settings as a shortcut, press [Save as Shortcut]. You will be asked if you want to make this a One Touch Shortcut. Follow the LCD instructions.

7. Press [Start].

   The machine starts scanning. If using the machine's scanner glass, follow the LCD instructions to complete the scanning job.

Related Information

- Scan Using the Scan Button on Your Machine

Related Topics:

- Configure the Scan Button on Your Machine
- Scan Using Brother iPrint&Scan (Windows/Mac)

Save Scanned Data to a USB Flash Drive

Scan documents and save them directly to a USB flash drive without using a computer.

1. Load your document.
2. Insert a USB flash drive in the USB slot.

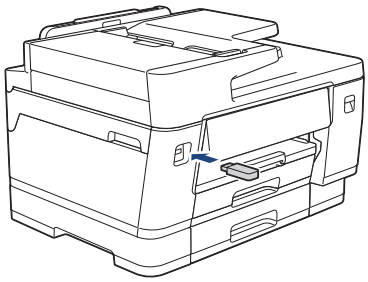

3. Press [Scan to Media].
4. To change the settings, press [Options], and then go to the next step.
5. Select the scan settings you want to change, and then press [OK].

Option	Description
2-sided Scan (MFC-J3960DW/ MFC-J6760DW/ MFC-J6960DW/ MFC-J6975DW/ MFC-J6977DW)	Select the 2-sided scan mode.
Colour Setting	Select the colour format for your document.
Resolution	Select the scan resolution for your document.
File Type	Select the file format for your document.
Document Size	Select your document size.
Brightness	Select the brightness level.
Contrast	Select the contrast level.
File Name	Select or edit a file name.
File Name Style	Select the order in which the date, counter number, and other items appear in the file names.
Auto Crop	Scan multiple documents placed on the scanner glass to a USB flash drive. The machine will scan each document and create separate files or a single multi-page file.
Auto Deskew	Correct any skewed documents when they are scanned.
Skip Blank Page	When On is selected, blank pages are skipped.
Skip Blank Page Sensitivity	Select the sensitivity level for detecting blank pages in the scanned data. The higher the sensitivity, the easier it is for the machine to detect blank pages.

Option	Description
Remove Background Colour	Change the amount of background colour that is removed.
Margin Settings	Adjust your document's margins.

- To set your own default settings: after making changes to settings, press the [Set New Default] option, and then press [Yes].
- To restore the factory settings: press the [Factory Reset] option, and then press [Yes].
- To save the settings as a shortcut, press [Save as Shortcut]. You will be asked if you want to make this a One Touch Shortcut. Follow the LCD instructions.

6. Press [Start].

If you are using the scanner glass, set the next page and then press [Continue]. If there are no more pages to scan, press [Finish]. After you finish scanning, make sure you choose [Finish] before removing the USB flash drive from the machine.

IMPORTANT

The LCD displays a message while reading the data. DO NOT unplug the power cord or remove the USB flash drive from the machine while it is reading the data. You could lose your data or damage the USB flash drive.

Related Information

- Scan Using the Scan Button on Your Machine

Scan Multiple Business Cards and Photos (Auto Crop)

You can scan multiple documents placed on the scanner glass. The machine will scan each document and use the Auto Crop feature to create separate files or a single multi-page file.

Guidelines for Auto Crop

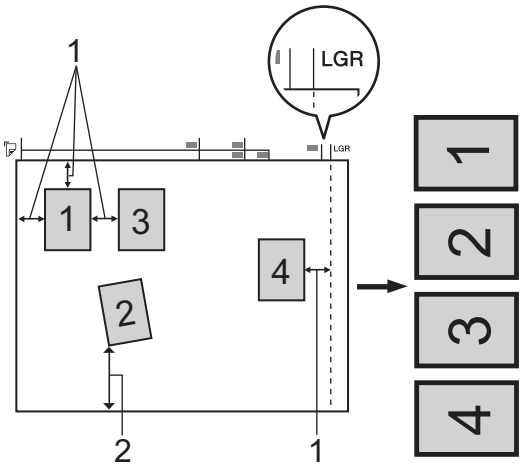

1. 10 mm or greater
2. 20 mm or greater (bottom)

- This setting is available only for documents that are rectangular or square.
- If your document is too long or wide, this feature will not work as described here.
- You must place the documents away from the edges of the scanner glass as shown in the illustration.
- You must place the documents at least 10 mm away from each other.
- Auto Crop adjusts the skew of the document on the scanner glass; however, if your document is skewed more than 45 degrees at less than 300 x 300 dpi or 10 degrees at 600 x 600 dpi, this feature will not work.
- The ADF must be empty to use Auto Crop.
- The Auto Crop feature is available for a maximum of 32 documents, depending on the size of the documents.

To scan documents using the Auto Crop feature, you must place the documents on the scanner glass.

1. Load documents on the scanner glass.
2. Insert a USB flash drive into your machine.
3. Press [Scan to Media] > [Options] > [Auto Crop].
4. Press [On].
5. Press [OK].
6. Press [Start].

   The machine starts scanning. Follow the LCD instructions to complete the scanning job.

Related Information

- Scan Using the Scan Button on Your Machine

Scan to an Editable Text File Using OCR

Your machine can convert characters in a scanned document to text using the optical character recognition (OCR) technology. You can edit this text using your preferred text-editing application.

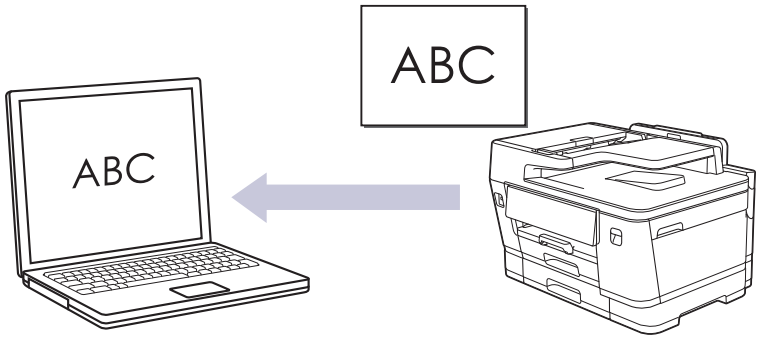

- The Scan to OCR feature is available for certain languages.
- **To scan from your machine:**

  You must first configure the Scan button on your machine, including settings such as file type and file storage location. See *Related Information*: *Configure the Scan Button on Your Machine.*
- **To scan from your computer:**

  See *Related Information*: *Scan Using Brother iPrint&Scan (Windows/Mac).*

1. Load your document.
2. Press [Scan] > [to PC] > [to OCR].
3. If the machine is connected over the network, press ▲ or ▼ to display the computer where you want to send data, and then select the computer name.

If the LCD message prompts you to enter a PIN, use the LCD to enter the four-digit PIN for the computer, and then press [OK].

4. To change the settings, press [Options].

To use [Options], you must connect a computer with Brother iPrint&Scan installed to the machine.

5. Press [Scan Settings] > [Set at Device].
6. Select the scan settings you want to change, and then press [OK].

Option	Description
2-sided Scan (MFC-J3960DW/MFC-J6760DW/ MFC-J6960DW/MFC-J6975DW/ MFC-J6977DW)	Select the 2-sided scan mode.
Colour Setting	Select the colour format for your document.
Resolution	Select the scan resolution for your document.
File Type	Select the file format for your document.
Document Size	Select your document size.
Brightness	Select the brightness level.

Option	Description
Contrast	Select the contrast level.
Auto Deskew	Correct any skewed documents when they are scanned.
Skip Blank Page	When On is selected, blank pages are skipped.
Skip Blank Page Sensitivity	Select the sensitivity level for detecting blank pages in the scanned data. The higher the sensitivity, the easier it is for the machine to detect blank pages.
Remove Background Colour	Change the amount of background colour that is removed.
Margin Settings	Adjust your document's margins.

To save the settings as a shortcut, press [Save as Shortcut]. You will be asked if you want to make this a One Touch Shortcut. Follow the LCD instructions.

7. Press [Start].

   The machine starts scanning. If using the machine's scanner glass, follow the LCD instructions to complete the scanning job.

Related Information

- Scan Using the Scan Button on Your Machine

Related Topics:

- Configure the Scan Button on Your Machine
- Scan Using Brother iPrint&Scan (Windows/Mac)

Save Scanned Data as an Email Attachment

Send the scanned data from your machine to your email application as an attachment.

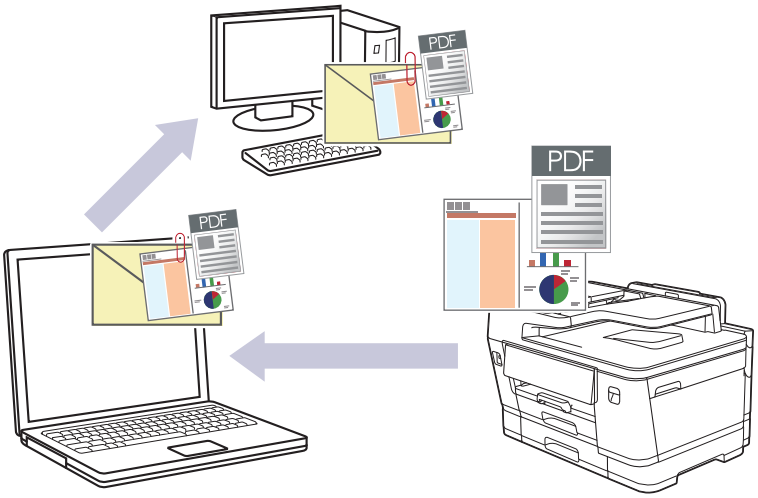

- **To scan from your machine:**

  You must first configure the Scan button on your machine, including settings such as file type and file storage location. See *Related Information*: *Configure the Scan Button on Your Machine.*
- **To scan from your computer:**

  See *Related Information*: *Scan Using Brother iPrint&Scan (Windows/Mac).*
- To use this feature with your machine's Scan button, make sure you select one of these applications in Brother iPrint&Scan:
  - Windows: Microsoft Outlook
  - Mac: Apple Mail

  For other applications and Webmail services, use the Scan to Image or Scan to File feature to scan a document, and then attach the scanned file to an email message.

1. Load your document.
2. Press [Scan] > [to PC] > [to E-mail].
3. If the machine is connected over the network, press ▲ or ▼ to display the computer where you want to send data, and then select the computer name.

   If the LCD message prompts you to enter a PIN, use the LCD to enter the four-digit PIN for the computer, and then press [OK].

4. To change the settings, press [Options].

   To use [Options], you must connect a computer with Brother iPrint&Scan installed to the machine.

5. Press [Scan Settings] > [Set at Device].
6. Select the scan settings you want to change, and then press [OK].

Option	Description
2-sided Scan (MFC-J3960DW/MFC-J6760DW/ MFC-J6960DW/MFC-J6975DW/ MFC-J6977DW)	Select the 2-sided scan mode.

Option	Description
Colour Setting	Select the colour format for your document.
Resolution	Select the scan resolution for your document.
File Type	Select the file format for your document.
Document Size	Select your document size.
Brightness	Select the brightness level.
Contrast	Select the contrast level.
Auto Deskew	Correct any skewed documents when they are scanned.
Skip Blank Page	When On is selected, blank pages are skipped.
Skip Blank Page Sensitivity	Select the sensitivity level for detecting blank pages in the scanned data. The higher the sensitivity, the easier it is for the machine to detect blank pages.
Remove Background Colour	Change the amount of background colour that is removed.
Margin Settings	Adjust your document's margins.

To save the settings as a shortcut, press [Save as Shortcut]. You will be asked if you want to make this a One Touch Shortcut. Follow the LCD instructions.

7. Press [Start].

   The machine scans the document and saves it as a file attachment. It then launches your email application and opens a new, blank email message with the scanned file attached.

Related Information

- Scan Using the Scan Button on Your Machine

Related Topics:

- Configure the Scan Button on Your Machine
- Scan Using Brother iPrint&Scan (Windows/Mac)

Send Scanned Data to an Email Recipient

Send scanned data directly from your Brother machine to an email recipient without using a computer.

- To send scanned data to an email recipient, you must configure your machine to communicate with your network and email server, which is used to send and receive emails.
- You can configure these items from the machine's control panel or Web Based Management.
- To use the Scan to Email Server function, your machine needs to be connected to a network and have access to an SMTP server. You will need the following SMTP email settings before you can proceed:
  - Server address
  - Port number
  - User name
  - Encryption type (SSL or TLS)
  - Email server certificate (if used)

  If you do not have these settings, contact your email service provider or network administrator.

1. Load your document.
2. Press [Scan] > [to E-mail Server].

(MFC-J6975DW/MFC-J6977DW)

- If you have registered your email address with your user ID, the [to My E-mail] button appears when you log on to the machine using Secure Function Lock, Active Directory Authentication or LDAP Authentication.
- To send scanned data to your email address, press [to My E-mail]. When your email address appears on the LCD, press [Next].
- To enable this feature in Web Based Management, click **Scan** > **Scan to E-mail Server** in the left navigation bar. In the **Send to My E-mail** field, select **On**.

3. Do one of the following to enter the destination email address:
   - To enter the email address manually, press [Manual], and then enter the email address using the character buttons on the LCD. When finished, press [OK].
   - If the email address is stored in the machine's address book, press [Address Book], and then select the email address.

     Press [OK].
4. Confirm the email address, and then press [Next].
5. To change the settings, press [Options], and then go to the next step.
6. Select the scan settings you want to change, and then press [OK].

Option	Description
2-sided Scan (MFC-J3960DW/MFC-J6760DW/ MFC-J6960DW/MFC-J6975DW/ MFC-J6977DW)	Select the 2-sided scan mode.
Colour Setting	Select the colour format for your document.
Resolution	Select the scan resolution for your document.
File Type	Select the file format for your document.
Document Size	Select your document size.

Option	Description
Sender Subject	Edit the email subject.
Brightness	Select the brightness level.
Contrast	Select the contrast level.
File Name	Select or edit a file name.
File Name Style	Select the order in which the date, counter number, and other items appear in the file names.
Margin Settings	Adjust your document's margins.
Preview (MFC-J6975DW/MFC-J6977DW)	Preview a scan result on the LCD, before the scanned data is saved.

- To set your own default settings: after making changes to settings, press the [Set New Default] option, and then press [Yes].
- To restore the factory settings: press the [Factory Reset] option, and then press [Yes].
- To save the settings as a shortcut, press [Save as Shortcut]. You will be asked if you want to make this a One Touch Shortcut. Follow the LCD instructions.
- (MFC-J6975DW/MFC-J6977DW) To preview the scanned results before the scanned data is saved, press and then press [Preview]. The machine scans the document and displays the scanned results on the LCD. If the scanned results are fine, press [Start] to save it and to finish processing.

7. Press [Start].

   The machine starts scanning. If using the machine's scanner glass, follow the LCD instructions to complete the scanning job.

Related Information

- Scan Using the Scan Button on Your Machine

Scan to FTP

Scan documents directly to an FTP server when you need to share the scanned information. For added convenience, configure different profiles to save your favourite Scan to FTP destinations.

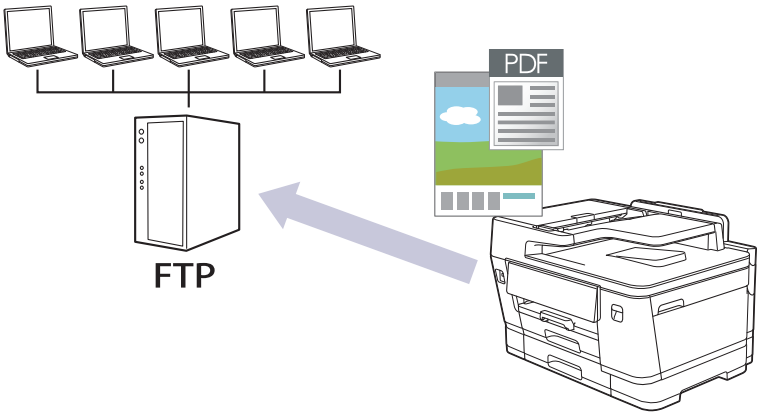

- Set up a Scan to FTP Profile
- Upload Scanned Data to an FTP Server

Set up a Scan to FTP Profile

Set up a Scan to FTP Profile to scan and upload the scanned data directly to an FTP location.

1. Start Web Based Management. See Access Web Based Management.
2. (MFC-J3660DW/MFC-J3960DW/MFC-J6560DW/MFC-J6760DW/MFC-J6960DW) In the left navigation bar, click **Scan** > **Scan to FTP/Network**.

If the left navigation bar is not visible, start navigating from ≡.

3. (MFC-J6975DW/MFC-J6977DW) In the left navigation bar, click **Scan** > **Scan to FTP/SFTP/Network/SharePoint**.

If the left navigation bar is not visible, start navigating from ≡.

4. Select the **FTP** option, and then click **Submit**.
5. (MFC-J3660DW/MFC-J3960DW/MFC-J6560DW/MFC-J6760DW/MFC-J6960DW) Click the **Scan to FTP/Network Profile** menu.
6. (MFC-J6975DW/MFC-J6977DW) Click the **Scan to FTP/SFTP/Network/SharePoint Profile** menu.
7. Select the profile you want to set up or change.

Using the following characters: ?, /, \, ", :, <, >, | or * may cause a sending error.

Option	Description
Profile Name	Type a name for this server profile (up to 15 alphanumeric characters). The machine will display this name on the LCD.
Host Address	Type the Host Address (for example: ftp.example.com; up to 64 characters) or the IP address (for example: 192.23.56.189).
Port Number	Change the **Port Number** setting used to access the FTP server. The default setting is port 21. In most cases, this setting does not need to be changed.
Username	Type a user name (up to 32 characters) of a user that has permission to write data to the FTP server.
Password	Type the password (up to 32 characters) associated with the user name you entered in the **Username** field. Type the password again in the **Retype password** field.
SSL/TLS	Set the **SSL/TLS** option to scan securely using SSL/TLS communication. Change the **CA Certificate** setting, if needed.
Store Directory	Type the path to the folder on the FTP server where you want to send your scanned data. Do not type a slash mark at the beginning of the path.
File Name	Select a file name from the preset names provided, or from user-defined names. You can set the user-defined names and file name style in the **Scan File Name** menu in the navigation bar.
Quality	Select a quality setting. If you choose the **User Select** option, the machine will prompt users to select a setting each time they use the scan profile.
File Type	Select the file type you want to use for the scanned document. If you choose the **User Select** option, the machine will prompt users to select a setting each time they use the scan profile.
Document Size	Select your document size from the list. This is necessary to make sure the scanned file is the correct size.

Option	Description
Auto Deskew (ADF Auto Deskew)	Select **On** to set the machine to correct document skewing automatically as the pages are scanned.
Skip Blank Page	Select the **On** option to remove blank pages of the document from the scanning results.
Skip Blank Page Sensitivity	Select the sensitivity level for detecting blank pages in the scanned data. The higher the sensitivity, the easier it is for the machine to detect blank pages.
2-sided Scan (MFC-J3960DW/ MFC-J6760DW/MFC-J6960DW/ MFC-J6975DW/MFC-J6977DW)	Select the **Long Edge** or **Short Edge** option to scan both sides of the document, depending on the layout of your original.
Remove Background Colour	Change the amount of background colour that is removed.
Margin Settings	Adjust your document's margins.
Brightness	Select the brightness level.
Contrast	Select the contrast level.
Passive Mode	Set the **Passive Mode** option to off or on depending on your FTP server and network firewall configuration. The default setting is on. In most cases, this setting does not need to be changed.

8. Click **Submit**.

Related Information

- Scan to FTP

Related Topics:

- Access Web Based Management

Upload Scanned Data to an FTP Server

>> MFC-J3660DW/MFC-J3960DW/MFC-J6560DW/MFC-J6760DW/MFC-J6960DW
>> MFC-J6975DW/MFC-J6977DW

MFC-J3660DW/MFC-J3960DW/MFC-J6560DW/MFC-J6760DW/MFC-J6960DW

1. Load your document.
2. Press [Scan] > [to FTP].
3. The server profiles you have set up using Web Based Management are listed. Select the profile you want. If the profile is not complete (for example, if the logon account name and password are missing, or if the quality or file type is not specified), you will be prompted to enter any missing information.
4. Press [Start].

   The machine starts scanning. If you are using the scanner glass, follow the Touchscreen instructions to complete the scanning job.

MFC-J6975DW/MFC-J6977DW

1. Load your document.
2. Press [Scan] > [to FTP/SFTP].
3. The server profiles you have set up using Web Based Management are listed. Select the profile you want. If the profile is not complete (for example, if the logon account name and password are missing, or if the quality or file type is not specified), you will be prompted to enter any missing information.

To preview the scanned results before the scanned data is saved, press and then press [Preview]. The machine scans the document and displays the scanned results on the LCD. If the scanned results are fine, press [Start] to save it and to finish processing.

4. Press [Start].

   The machine starts scanning. If you are using the scanner glass, follow the Touchscreen instructions to complete the scanning job.

Related Information

- Scan to FTP

Scan to SSH Server (SFTP)

Related Models: MFC-J6975DW/MFC-J6977DW

Uses the Secure Shell Protocol to establish a private and safe data stream when scanning documents to a network destination. For added convenience, configure different profiles to save your favourite Scan to SFTP destinations.

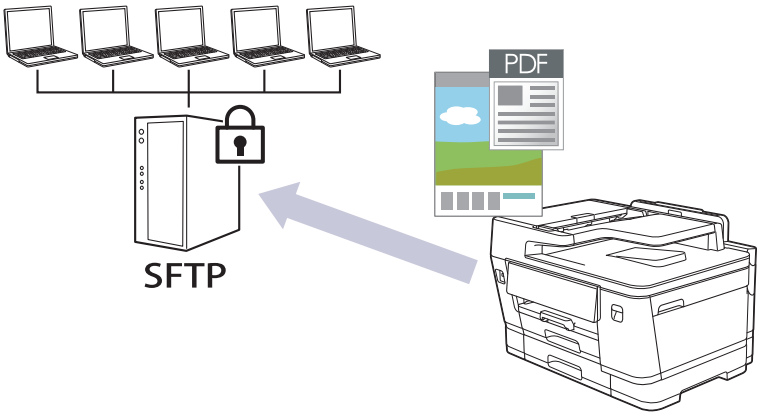

- Set up a Scan to SFTP Profile
- Create a Client Key Pair Using Web Based Management
- Export a Client Key Pair Using Web Based Management
- Import a Server Public Key Using Web Based Management
- Upload Scanned Data to an SFTP Server

Set up a Scan to SFTP Profile

Related Models: MFC-J6975DW/MFC-J6977DW

Set up a Scan to SFTP Profile to scan and upload scanned data directly to an SFTP location.

1. Start Web Based Management. See Access Web Based Management.
2. In the left navigation bar, click **Scan** > **Scan to FTP/SFTP/Network/SharePoint**.

If the left navigation bar is not visible, start navigating from ≡.

3. Select the **SFTP** option, and then click **Submit**.
4. Click the **Scan to FTP/SFTP/Network/SharePoint Profile** menu.
5. Select the profile you want to set up or change.

Using the following characters: ?, /, \, ", :, <, >, | or * may cause a sending error.

Option	Description
Profile Name	Type a name for this server profile (up to 15 alphanumeric characters). The machine will display this name on the LCD.
Host Address	Type the Host Address (for example: ftp.example.com; up to 64 characters) or the IP address (for example: 192.23.56.189).
Username	Type a user name (up to 32 characters) of a user that has permission to write data to the SFTP server.
Auth. Method	Select **Password** or **Public Key**. Do one of the following: • When you select **Password**, type the password (up to 32 characters) associated with the user name you typed in the **Username** field. Type the password again in the **Retype password** field. • When you select **Public Key**, select the authentication type from the **Client Key Pair** drop-down list.
Server Public Key	Select the authentication type.
Store Directory	Type the path to the folder on the SFTP server where you want to send your scanned data. Do not type a slash mark at the beginning of the path.
File Name	Select a file name from the preset names provided, or from user-defined names. You can set the user-defined names and file name style in the **Scan File Name** menu in the navigation bar.
Quality	Select a quality setting. If you choose the **User Select** option, the machine will prompt users to select a setting each time they use the scan profile.
File Type	Select the file type you want to use for the scanned document. If you choose the **User Select** option, the machine will prompt users to select a setting each time they use the scan profile.
Document Size	Select your document size from the list. This is necessary to make sure the scanned file is the correct size.
Auto Deskew (ADF Auto Deskew)	Select **On** to set the machine to correct document skewing automatically as the pages are scanned.
Skip Blank Page	Select the **On** option to remove blank pages of the document from the scanning results.

Option	Description
Skip Blank Page Sensitivity	Select the sensitivity level for detecting blank pages in the scanned data. The higher the sensitivity, the easier it is for the machine to detect blank pages.
2-sided Scan	Select the **Long Edge** or **Short Edge** option to scan both sides of the document, depending on the layout of your original.
Remove Background Colour	Change the amount of background colour that is removed.
Margin Settings	Adjust your document's margins.
Brightness	Select the brightness level.
Contrast	Select the contrast level.
Port Number	Change the **Port Number** setting used to access the SFTP server. The default setting is port 22. In most cases, this setting does not need to be changed.

6. Click **Submit**.

Related Information

- Scan to SSH Server (SFTP)

Related Topics:

- Access Web Based Management

Create a Client Key Pair Using Web Based Management

Related Models: MFC-J6975DW/MFC-J6977DW

1. Start Web Based Management. See Access Web Based Management.
2. In the left navigation bar, click **Network** > **Security** > **Client Key Pair**.

   If the left navigation bar is not visible, start navigating from ≡.

3. Click **Create New Client Key Pair**.
4. In the **Client Key Pair Name** field, type the name (up to 20 characters) you want.
5. Click the **Public Key Algorithm** drop-down list, and then select the algorithm you want.
6. Click **Submit**.

   The client key pair is created and saved in your machine's memory. The client key pair name and public key algorithm will be displayed in the **Client Key Pair List**.

Related Information

- Scan to SSH Server (SFTP)

Related Topics:

- Access Web Based Management

Export a Client Key Pair Using Web Based Management

Related Models: MFC-J6975DW/MFC-J6977DW

1. Start Web Based Management. See Access Web Based Management.
2. In the left navigation bar, click **Network** > **Security** > **Client Key Pair**.

   If the left navigation bar is not visible, start navigating from ≡.

3. Click **Export Public Key** shown with **Client Key Pair List**.
4. Click **Submit**.

The client key pair is exported to your computer.

Related Information

- Scan to SSH Server (SFTP)

Related Topics:

- Access Web Based Management

Import a Server Public Key Using Web Based Management

Related Models: MFC-J6975DW/MFC-J6977DW

1. Start Web Based Management. See Access Web Based Management.
2. In the left navigation bar, click **Network** > **Security** > **Server Public Key**.

   If the left navigation bar is not visible, start navigating from ≡.

3. Click **Import Server Public Key**.
4. Specify the file that you want to import.
5. Click **Submit**.

The server public key is imported to your machine.

Related Information

- Scan to SSH Server (SFTP)

Related Topics:

- Access Web Based Management

Upload Scanned Data to an SFTP Server

Related Models: MFC-J6975DW/MFC-J6977DW

1. Load your document.
2. Press [Scan] > [to FTP/SFTP].
3. The server profiles you have set up using Web Based Management are listed. Select the profile you want. If the profile is not complete (for example, if the logon account name and password are missing, or if the quality or file type is not specified), you will be prompted to enter any missing information.

To preview the scanned results before the scanned data is saved, press and then press [Preview]. The machine scans the document and displays the scanned results on the LCD. If the scanned results are fine, press [Start] to save it and to finish processing.

4. Press [Start].

   The machine starts scanning. If you are using the scanner glass, follow the Touchscreen instructions to complete the scanning job.

Related Information

- Scan to SSH Server (SFTP)

Scan to Network (Windows)

Scan documents directly to a CIFS server on your local network. For added convenience, you can configure different profiles to save your favourite Scan to Network destinations.

- Set up a Scan to Network Profile
- Upload Scanned Data to a CIFS Server

Set up a Scan to Network Profile

Set up a Scan to Network Profile to scan and upload scanned data directly to a folder on a CIFS server.

1. Start Web Based Management. See Access Web Based Management.
2. (MFC-J3660DW/MFC-J3960DW/MFC-J6560DW/MFC-J6760DW/MFC-J6960DW) In the left navigation bar, click **Scan** > **Scan to FTP/Network**.

If the left navigation bar is not visible, start navigating from ≡.

3. (MFC-J6975DW/MFC-J6977DW) In the left navigation bar, click **Scan** > **Scan to FTP/SFTP/Network/SharePoint**.

If the left navigation bar is not visible, start navigating from ≡.

4. Select the **Network** option, and then click **Submit**.

(MFC-J6975DW/MFC-J6977DW)
If you want to send the data to your designated folder on the CIFS server, select **On** for the **Send to My Folder** option.

5. (MFC-J3660DW/MFC-J3960DW/MFC-J6560DW/MFC-J6760DW/MFC-J6960DW) Click the **Scan to FTP/Network Profile** menu.
6. (MFC-J6975DW/MFC-J6977DW) Click the **Scan to FTP/SFTP/Network/SharePoint Profile** menu.
7. Select the profile you want to set up or change.

Using the following characters: ?, /, \, ", :, <, >, | or * may cause a sending error.

Option	Description
Profile Name	Type a name for this server profile (up to 15 alphanumeric characters). The machine will display this name on the LCD.
Network Folder Path	Type the path to the folder on the CIFS server where you want to send your scanned data.
File Name	Select a file name from the preset names provided, or from user-defined names. You can set the user-defined names and file name style in the **Scan File Name** menu in the navigation bar.
Quality	Select a quality setting. If you choose the **User Select** option, the machine will prompt users to select a setting each time they use the scan profile.
File Type	Select the file type you want to use for the scanned document. If you choose the **User Select** option, the machine will prompt users to select a setting each time they use the scan profile.
Document Size	Select your document size from the list. This is necessary to make sure the scanned file is the correct size.
Auto Deskew (ADF Auto Deskew)	Select **On** to set the machine to correct document skewing automatically as the pages are scanned.
Skip Blank Page	Select the **On** option to remove blank pages of the document from the scanning results.
Skip Blank Page Sensitivity	Select the sensitivity level for detecting blank pages in the scanned data. The higher the sensitivity, the easier it is for the machine to detect blank pages.
2-sided Scan (MFC-J3960DW/MFC-J6760DW/MFC-J6960DW/MFC-J6975DW/MFC-J6977DW)	Select the **Long Edge** or **Short Edge** option to scan both sides of the document, depending on the layout of your original.

Option	Description
Remove Background Colour	Change the amount of background colour that is removed.
Margin Settings	Adjust your document's margins.
Brightness	Select the brightness level.
Contrast	Select the contrast level.
Use PIN for Authentication	To PIN-protect this profile, select **On**, and then type a four-digit PIN in the **PIN Code** field.
Auth. Method	Select the authentication method.
Username	Type a user name (up to 96 characters) that has permission to write data to the folder specified in the **Network Folder Path** field. If the user name is part of a domain, type the user name in one of the following styles: **user@domain** **domain\user**
Password	Type the password (up to 32 characters) associated with the user name you entered in the **Username** field. Type the password again in the **Retype password** field.
Kerberos Server Address	Type the Kerberos Server Address (for example: kerberos.example.com; up to 64 characters).

8. Click **Submit**.
9. You must configure the SNTP (network time server) or you must set the date, time and time zone correctly on the control panel. The time must match the time used by the Kerberos Server and CIFS Server.

Related Information

- Scan to Network (Windows)

Related Topics:

- Configure Date and Time Using Web Based Management
- Access Web Based Management

Upload Scanned Data to a CIFS Server

1. Load your document.
2. Press [Scan] > [to Network].

(MFC-J6975DW/MFC-J6977DW)

- If you registered your user ID, the [to My Folder] option appears when you log on to the machine using Active Directory Authentication or LDAP Authentication.
- To send scanned data to your designated folder on the CIFS server, press [to My Folder].
- To enable this feature in Web Based Management, in the left navigation bar, click **Scan** > **Scan to FTP/SFTP/Network/SharePoint**. In the **Send to My Folder** field, select **On**.

3. The server profiles you have set up using Web Based Management are listed. Select the profile you want. If the profile is not complete (for example, if the logon account name and password are missing, or if the quality or file type is not specified), you will be prompted to enter any missing information.

(MFC-J6975DW/MFC-J6977DW) To preview the scanned results before the scanned data is saved, press and then press [Preview]. The machine scans the document and displays the scanned results on the LCD. If the scanned results are fine, press [Start] to save it and to finish processing.

4. Press [Start].

   The machine starts scanning. If you are using the scanner glass, follow the Touchscreen instructions to complete the scanning job.

Related Information

- Scan to Network (Windows)

Scan to SharePoint

Related Models: MFC-J6975DW/MFC-J6977DW

Scan documents directly to a SharePoint server when you need to share the scanned information. For added convenience, configure different profiles to save your favourite Scan to SharePoint destinations.

- Set up a Scan to SharePoint Profile
- Upload Scanned Data to a SharePoint Server

Set up a Scan to SharePoint Profile

Related Models: MFC-J6975DW/MFC-J6977DW

Set up a Scan to SharePoint Profile to scan and upload the scanned data directly to a SharePoint location.

1. Start Web Based Management. See Access Web Based Management.
2. In the left navigation bar, click **Scan** > **Scan to FTP/SFTP/Network/SharePoint**.

If the left navigation bar is not visible, start navigating from ≡.

3. Select the **SharePoint** option, and then click **Submit**.
4. Click the **Scan to FTP/SFTP/Network/SharePoint Profile** menu.
5. Select the profile you want to set up or change.

Using the following characters: ?, /, \, ", :, <, >, | or * may cause a sending error.

Option	Description
Profile Name	Type a name for this server profile (up to 15 alphanumeric characters). The machine will display this name on the LCD.
SharePoint Site Address	Copy and paste the full destination address shown in the address bar of your browser (for example: http://SharePointSiteAddress/Shared%20Documents/Forms/AllItems.aspx) or the IP address (for example: http://192.168.0.1/Shared%20Documents/Forms/AllItems.aspx).
SSL/TLS	If the address in the **SharePoint Site Address** field starts with "https://", you can verify the server certificate by selecting the **Verify Server Certificate** checkbox.
File Name	Select a file name from the preset names provided, or from user-defined names. You can set the user-defined names and file name style in the **Scan File Name** menu in the navigation bar.
Quality	Select a quality setting. If you choose the **User Select** option, the machine will prompt users to select a setting each time they use the scan profile.
File Type	Select the file type you want to use for the scanned document. If you choose the **User Select** option, the machine will prompt users to select a setting each time they use the scan profile.
Document Size	Select your document size from the list. This is necessary to make sure the scanned file is the correct size.
Auto Deskew (ADF Auto Deskew)	Select **On** to set the machine to correct document skewing automatically as the pages are scanned.
Skip Blank Page	Select the **On** option to remove blank pages of the document from the scanning results.
Skip Blank Page Sensitivity	Select the sensitivity level for detecting blank pages in the scanned data. The higher the sensitivity, the easier it is for the machine to detect blank pages.
2-sided Scan	Select the **Long Edge** or **Short Edge** option to scan both sides of the document, depending on the layout of your original.
Remove Background Colour	Change the amount of background colour that is removed.
Margin Settings	Adjust your document's margins.
Brightness	Select the brightness level.
Contrast	Select the contrast level.

Option	Description
Use PIN for Authentication	To PIN-protect this profile, select **On**, and then type a four-digit PIN in the **PIN Code** field.
Auth. Method	Select the authentication method. If you select **Auto**, the authentication method will be automatically detected.
Username	Type a user name (up to 96 characters) that has permission to write data to the folder specified in the **SharePoint Site Address** field. If the user name is part of a domain, type the user name in one of the following styles: **user@domain** **domain\user**
Password	Type the password (up to 32 characters) associated with the user name you entered in the **Username** field. Type the password again in the **Retype password** field.
Kerberos Server Address	Type the Kerberos Server Address (for example: kerberos.example.com; up to 64 characters).

6. Click **Submit**.

Related Information

- Scan to SharePoint

Related Topics:

- Access Web Based Management

Upload Scanned Data to a SharePoint Server

Related Models: MFC-J6975DW/MFC-J6977DW

1. Load your document.
2. Press [Scan] > [to SharePoint].
3. The server profiles you have set up using Web Based Management are listed. Select the profile you want. If the profile is not complete (for example, if the logon account name and password are missing, or if the quality or file type is not specified), you will be prompted to enter any missing information.

To preview the scanned results before the scanned data is saved, press and then press [Preview]. The machine scans the document and displays the scanned results on the LCD. If the scanned results are fine, press [Start] to save it and to finish processing.

4. Press [Start].

   The machine starts scanning. If you are using the scanner glass, follow the Touchscreen instructions to complete the scanning job.

Related Information

- Scan to SharePoint

Web Services for Scanning on Your Network (Windows)

The Web Services protocol enables Windows 10 and Windows 11 users to scan using a Brother machine on the network. You must install the driver via Web Services.

- Use the Web Services Protocol to Install the Scanner Driver (Windows)
- Scan Using Web Services from Your Machine (Windows)
- Configure Scan Settings for the Web Services Protocol (Windows)

Use the Web Services Protocol to Install the Scanner Driver (Windows)

- Make sure you have installed the correct software and drivers for your machine.
- Verify that the host computer and the Brother machine are on the same subnet, or that the router is correctly configured to pass data between the two devices.
- You must configure the IP address on your Brother machine before you configure this setting.

1. Hold down the [⊞] key and press the [R] key on the computer's keyboard to launch **Run**.
2. Type **"control printers"** in the **Open:** field and click **OK**.

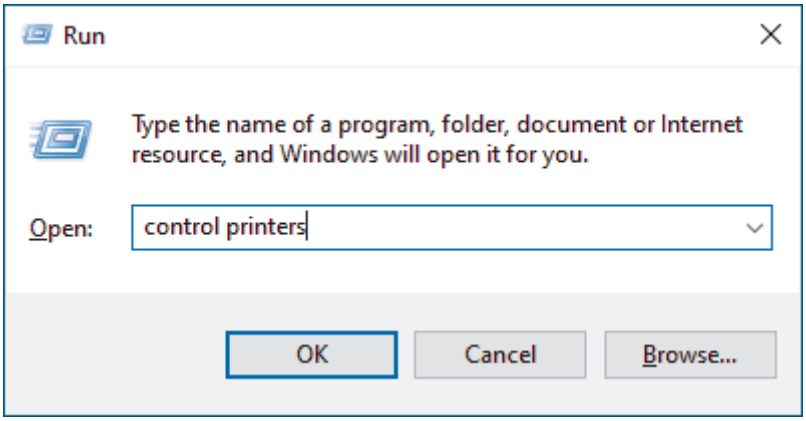

The **Devices and Printers** window appears.

If the **Devices and Printers** window does not appear, click **Devices** > **More devices and printer settings**.

3. Click **Add a device**.

The Web Services Name for the Brother machine is your model's name and the MAC Address.

4. Select the machine you want to install, and then follow the on-screen instructions.

To uninstall the drivers, click **Remove device**.

Related Information

- Web Services for Scanning on Your Network (Windows)

Scan Using Web Services from Your Machine (Windows)

If you have installed the driver for scanning via Web Services, you can access the Web Services scanning menu on your Brother machine's LCD.

- Certain characters in the messages displayed on the LCD may be replaced with spaces if the language settings of your OS and your Brother machine are different.
- If the LCD displays an insufficient memory error message, choose a smaller size in the **Paper size** setting or a lower resolution in the **Resolution (DPI)** setting.

1. Load your document.
2. Press [Scan] > [WS Scan].
3. Press ▲ or ▼ to select the type of scan you want, and then press it.
4. Press ▲ or ▼ to display the computer where you want to send data, and then select the computer name.
5. Press [Start].

   The machine starts scanning.

Related Information

- Web Services for Scanning on Your Network (Windows)

Configure Scan Settings for the Web Services Protocol (Windows)

1. Hold down the [⊞] key and press the [R] key on the computer's keyboard to launch **Run**.
2. Type **"control printers"** in the **Open:** field and click **OK**.

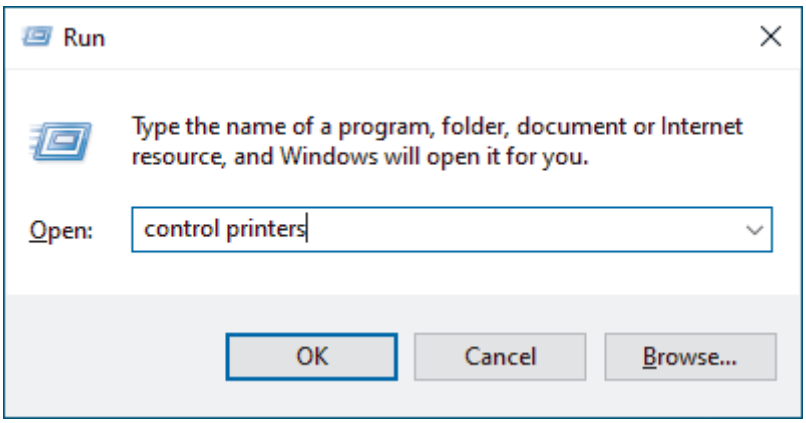

The **Devices and Printers** window appears.

If the **Devices and Printers** window does not appear, click **Devices** > **More devices and printer settings**.

3. Right-click the machine icon, and then select **Scan profiles...**. The **Scan Profiles** dialog box appears.
4. Select the scan profile you want to use.
5. Make sure the scanner selected in the **Scanner** list is a machine that supports Web Services for scanning, and then click the **Set as Default** button.
6. Click **Edit...**.

   The **Edit Default Profile** dialog box appears.
7. Select the **Source**, **Paper size**, **Colour format**, **File type**, **Resolution (DPI)**, **Brightness** and **Contrast** settings. (The available options will vary depending on your model.)
8. Click the **Save Profile** button.

   These settings will be applied when you scan using the Web Services protocol.

Related Information

- Web Services for Scanning on Your Network (Windows)

Scan Using Brother iPrint&Scan (Windows/Mac)

1. Load your document.
2. Start Brother iPrint&Scan.
   - Windows:

     Double-click the (**Brother iPrint&Scan**) icon on your computer's desktop.

     For more information, see *Related Information*.
   - Mac:

     In the **Finder** menu bar, click **Go** > **Applications**, and then double-click the iPrint&Scan icon.

   The Brother iPrint&Scan screen appears.

NOTE

To download the latest application:

- For Windows:

  Go to your model's **Downloads** page at support.brother.com/downloads, and then download and install Brother iPrint&Scan.
- For Mac:

  Download and install Brother iPrint&Scan from the Apple App Store.

3. If your Brother machine is not selected, click the **Add Machine** / **Select your Machine** button, and then select your model's name from the list. Click **OK**.
4. Click the **Scan** icon.
5. Configure the scan settings, and then click the **Scan** button to start scanning.
6. After all the documents have been scanned, select the option for saving and sharing scanned data.
7. Configure detailed settings, including the **File Name** and the **File Type**.

To combine multiple scans into a file, select PDF as the **File Type**.

8. Complete the scanning process.

Related Information

- Scan

Related Topics:

- Access Brother iPrint&Scan (Windows/Mac)

Scan from Your Computer (Windows)

There are several ways you can use your computer to scan photos and documents on your machine. Use the software applications we provide or use your favourite scanning application.

- Scan Using Kofax PaperPort™ 14SE or Other Windows Applications
- Scan Using Windows Fax and Scan

Scan Using Kofax PaperPort™ 14SE or Other Windows Applications

You can use the Kofax PaperPort™ 14SE application for scanning.

To download the Kofax PaperPort™ 14SE application, click (**Brother Utilities**), select **Do More** in the left navigation bar, and then click **PaperPort**.

The instructions for scanning in these steps are for PaperPort™ 14SE. For other Windows applications, the steps will be similar. PaperPort™ 14SE supports both TWAIN and WIA drivers; the TWAIN driver (recommended) is used in these steps.

Depending on the model of your machine, Kofax PaperPort™ 14SE may not be included. If it is not included, you can use other software applications that support scanning.

1. Load your document.
2. Start PaperPort™ 14SE.

   Do one of the following:

   - Windows 11

     Click > **All** > **Kofax PaperPort 14** > **PaperPort**.
   - Windows 10

     Click > **Kofax PaperPort 14** > **PaperPort**.
3. Click the **Desktop** menu, and then click **Scan Settings** in the **Desktop** ribbon.

   The **Scan or Get Photo** panel appears on the left side of the screen.
4. Click **Select**.
5. From the available Scanners list, select your model with **TWAIN: TW** in the name.
6. Click **OK**.
7. Select the **Display scanner dialog box** checkbox in the **Scan or Get Photo** panel.
8. Click **Scan**.

   The Scanner Setup dialog box appears.

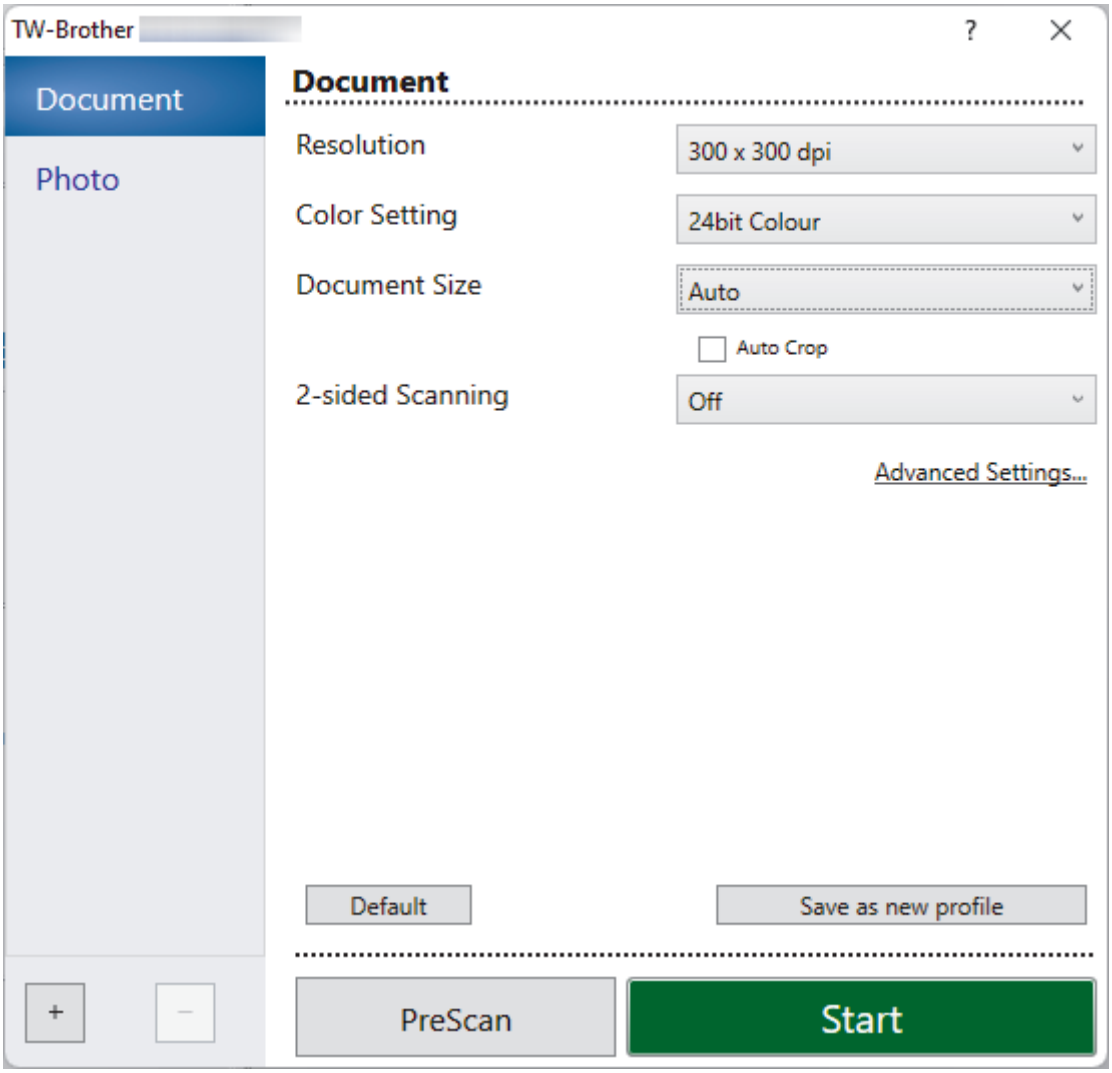

9. Adjust the settings in the Scanner Setup dialog box, if needed.
10. Click the **Document Size** drop-down list, and then select your document size.

To scan both sides of the document (MFC-J3960DW/MFC-J6760DW/MFC-J6960DW/MFC-J6975DW/MFC-J6977DW):

Automatic 2-sided scan is available only when using the ADF.

You cannot use PreScan to preview the scanned image.

11. Click **PreScan** to preview your image and crop unwanted portions before scanning.
12. Click **Start**.

    The machine starts scanning.

Related Information

- Scan from Your Computer (Windows)
  - TWAIN Driver Settings (Windows)

TWAIN Driver Settings (Windows)

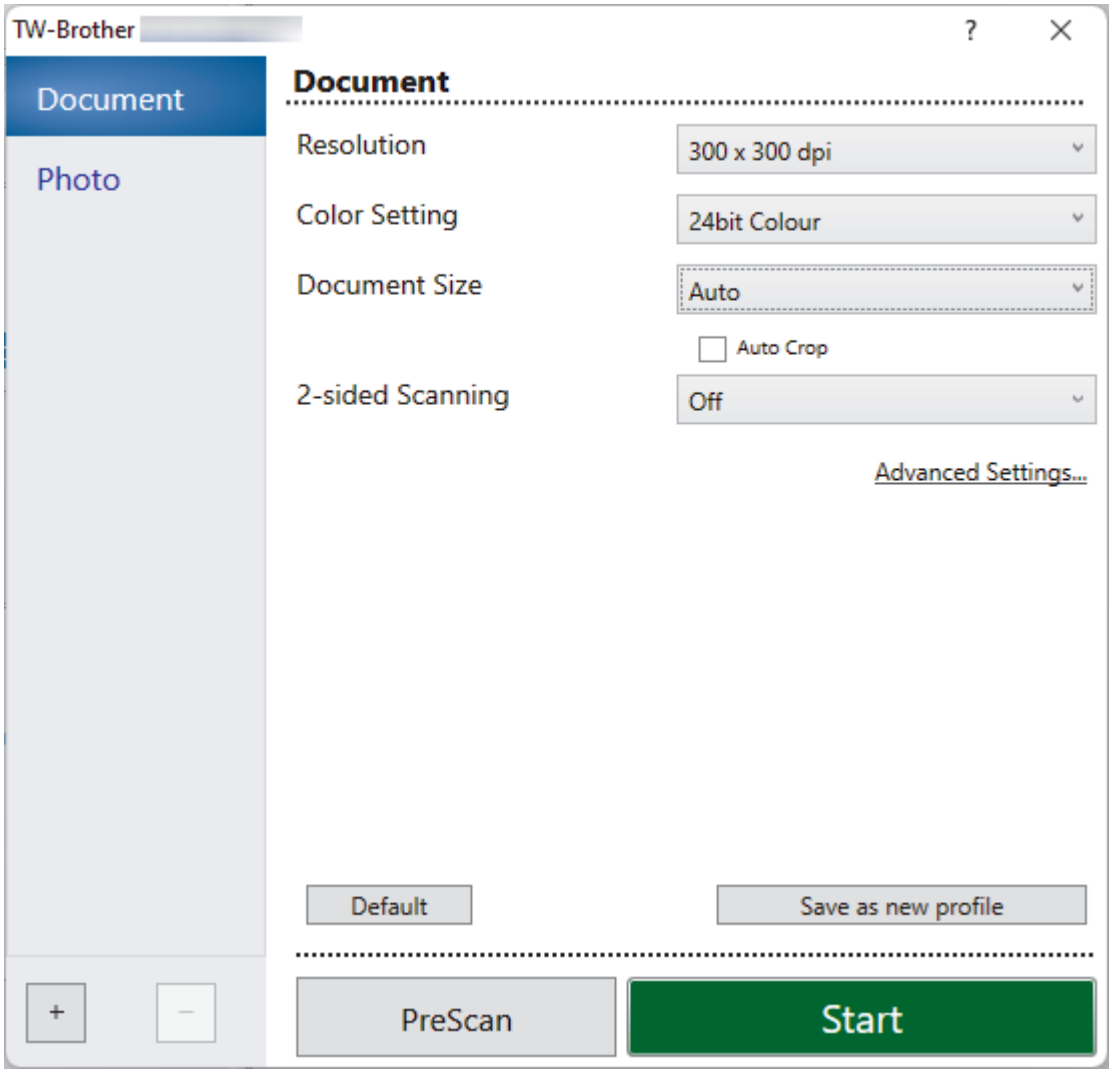

Note that the item names and assignable values will vary depending on the machine.

1. **Scan**

   Select the **Photo** or **Document** option depending on the type of document you want to scan.

Scan (Image Type)		Resolution	Colour Setting
Photo	Use for scanning photo images.	300 x 300 dpi	**24bit Colour**
Document	Use for scanning text documents.	300 x 300 dpi	**24bit Colour**

2. **Resolution**

   Select a scanning resolution from the **Resolution** drop-down list. Higher resolutions take more memory and a longer transfer time, but produce a higher quality scanned image.

3. **Color Setting**

   Select from a range of scan colour depths.

   - **Black & White**

     Use for text or line art images.

- **True Grey**

  Use for photographic images or graphics. This mode is more accurate because it uses up to 256 shades of grey.

- **24bit Colour**

  Use to create an image with the most accurate colour reproduction. This mode uses up to 16.8 million colours to scan the image, but it requires the most memory and has the longest transfer time.

4. **Document Size**

   Select the exact size of your document from a selection of preset scan sizes.

   If you select **Custom**, the **Custom Document Size** dialog box appears and you can specify the document size.

5. **Auto Crop**

   Scan multiple documents placed on the scanner glass. The machine will scan each document and create separate files or a single multi-page file.

6. **(MFC-J3960DW/MFC-J6760DW/MFC-J6960DW/MFC-J6975DW/MFC-J6977DW) 2-sided Scanning**

   Scan both sides of the document. When using the Automatic 2-sided Scan feature, you must select the **Long-edge binding** or **Short-edge binding** option from the **2-sided Scanning** drop-down list, so when you turn the pages, they are facing the way you want.

7. **Advanced Settings**

   Configure advanced settings by clicking the **Advanced Settings** link in the Scanner Setup dialog box.

   - **Document Correction**
     - **Auto Deskew**

       Set the machine to correct document skewing automatically as the pages are scanned from the scanner glass.
     - **Margin Settings**

       Adjust your document's margins.
     - **Rotate Image**

       Rotate the scanned image.
     - **Fill With Color**

       Fill in the edges on four sides of the scanned image using the selected colour and range.
     - **Skip Blank Page**

       Remove the document's blank pages from the scanning results.
     - **Fixed-size Output Mode (Letter/Legal)**

       Scan mixed size documents. The machine detects each document size and creates a file including Letter and Legal size pages. To use this mode, select the **Auto** option from the **Document Size** drop-down list.
   - **Image Quality**
     - **Colour Tone Adjustment**

       Adjust the colour tone.
     - **Background Processing**
       - **Remove Bleed-through / Pattern**

         Prevent bleed-through.
       - **Remove Background Colour**

         Remove the base colour of documents to make the scanned data more legible.
     - **Colour Drop**

       Select a colour to remove from the scanned image.
     - **Edge Emphasis**

       Sharpen the characters in the original.
     - **Reduce Noise**

Improve the quality of your scanned images with this selection. The **Reduce Noise** option is available when selecting the **24bit Colour** option and the **300 x 300 dpi**, **400 x 400 dpi**, or **600 x 600 dpi** scan resolution.

- **B&W Image Quality**
  - **B&W Threshold Adjustment**

    Adjust the threshold to generate a monochrome image.
  - **Character Correction**

    Correct the broken or incomplete characters of the original to make them easier to read.
  - **B&W Inversion**

    Invert black and white in the monochrome image.
- **Feed Control**
  - **Layout**

    Select the layout.
  - **Continuous Scan**

    Select this option to scan multiple pages. After a page is scanned, select whether to continue scanning or finish.

Related Information

- Scan Using Kofax PaperPort™ 14SE or Other Windows Applications

Scan Using Windows Fax and Scan

The Windows Fax and Scan application is another option that you can use for scanning.

- Windows Fax and Scan may not be installed on your computer. You must install it in advance.
- Windows Fax and Scan uses the WIA scanner driver.
- If you plan to crop a portion of a scanned page, you must scan the original document using the scanner glass (also called the flatbed), not by feeding it through the Automatic Document Feeder (ADF).

1. Load your document.
2. Launch Windows Fax and Scan.
3. Click **File** > **New** > **Scan**.
4. Select the scanner you want to use.
5. Click **OK**.

   The **New Scan** dialog box appears.

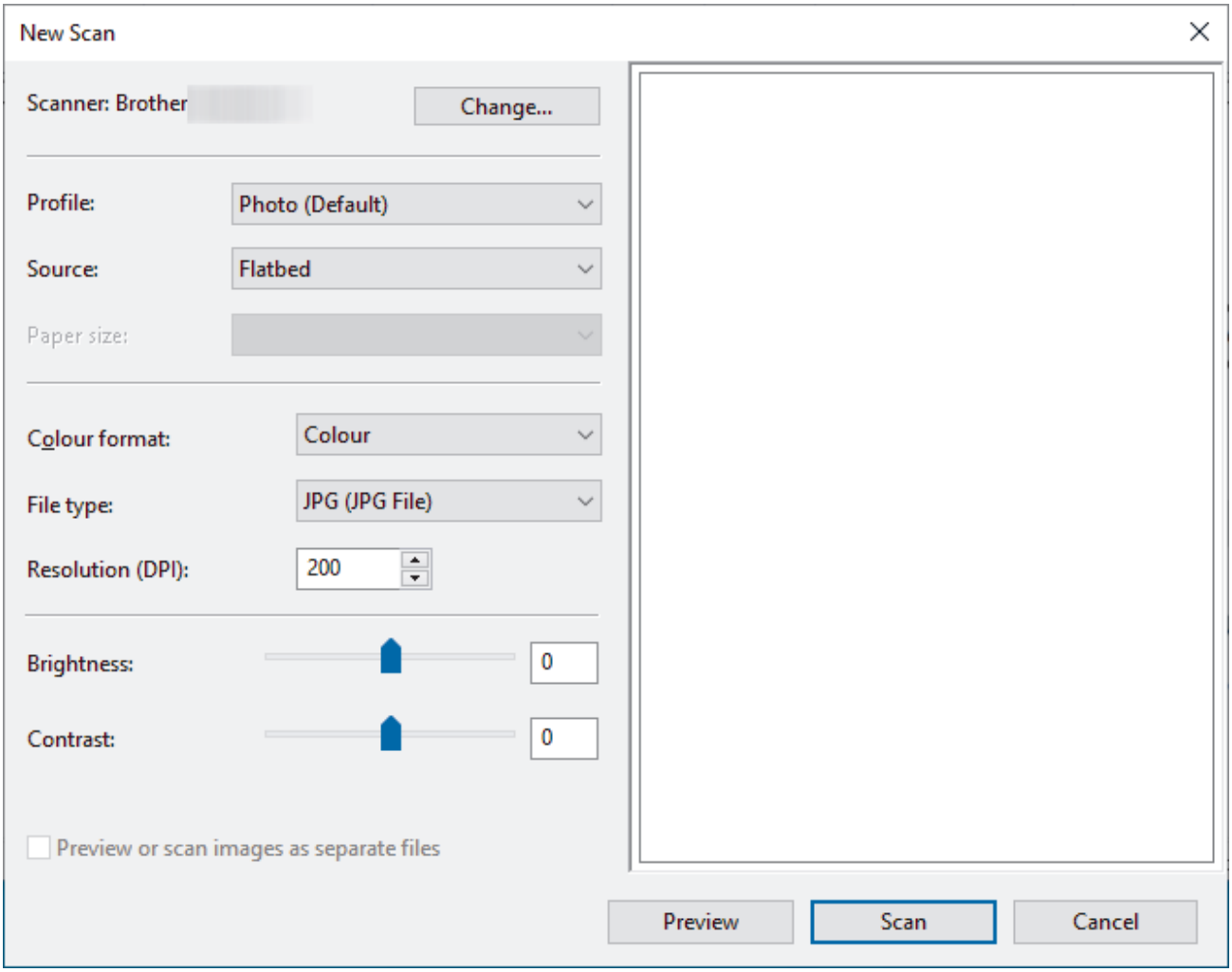

6. Adjust the settings in the dialog box, if needed.

   If your machine supports 2-sided scanning and you want to scan both sides of your document, select **Feeder (Scan both sides)** from the **Source** drop-down list.
7. Click **Scan**.

   The machine starts scanning the document.

Related Information

- Scan from Your Computer (Windows)

- WIA Driver Settings (Windows)

WIA Driver Settings (Windows)

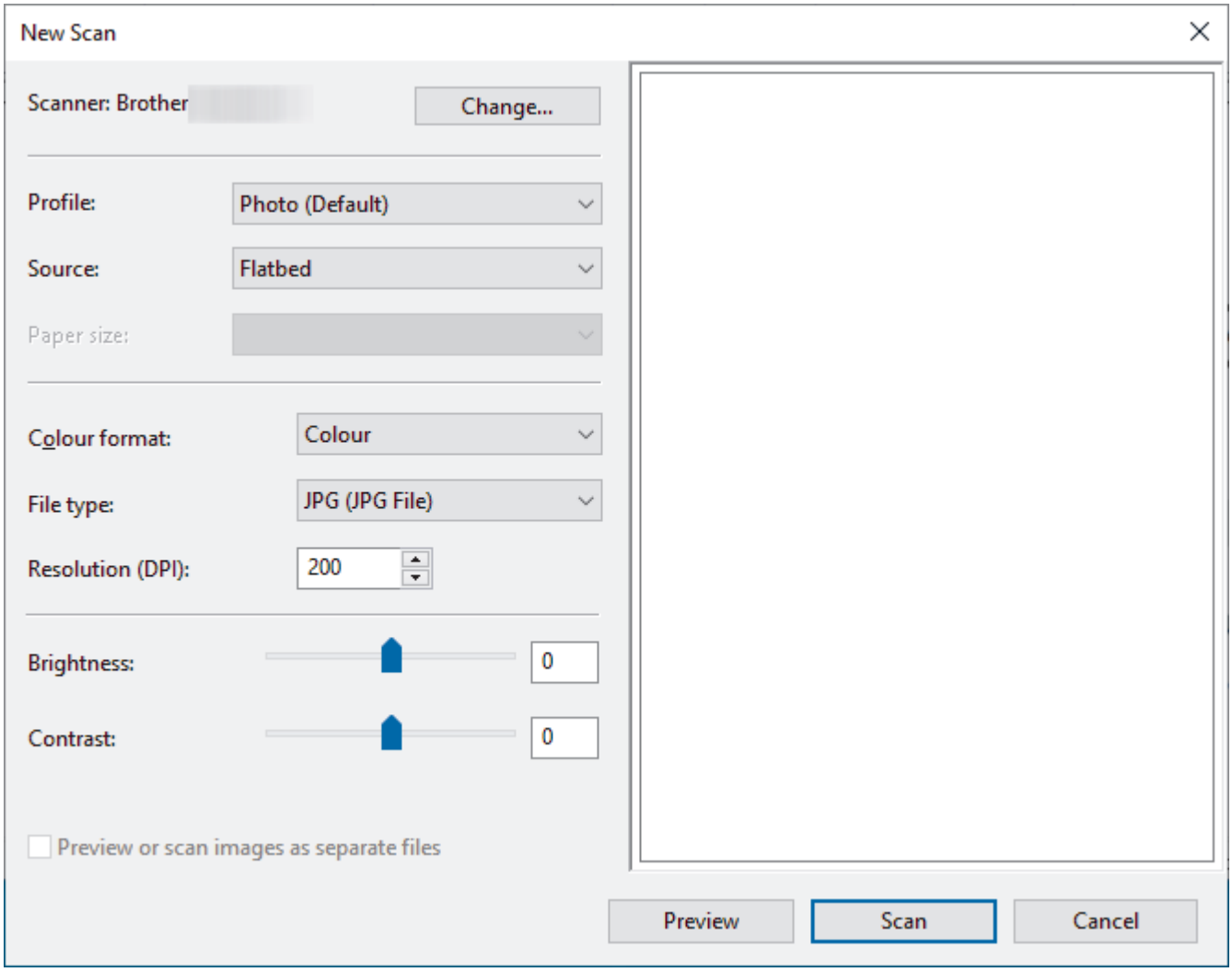

Profile

Select the scan profile you want to use from the **Profile** drop-down list.

Source

Select the **Flatbed**, **Feeder (Scan one side)**, or **Feeder (Scan both sides)** option from the drop-down list.

Paper size

The **Paper size** option is available if you select the **Feeder (Scan one side)** or **Feeder (Scan both sides)** option from the **Source** drop-down list.

Colour format

Select a scan colour format from the **Colour format** drop-down list.

File type

Select a file format from the **File type** drop-down list.

Resolution (DPI)

Set a scanning resolution in the **Resolution (DPI)** field. Higher resolutions take more memory and a longer transfer time, but produce a higher quality scanned image.

Brightness

Set the brightness level by dragging the slider to the right or left to lighten or darken the image. If the scanned image is too light, set a lower brightness level and scan the document again. If the image is too dark, set a

higher brightness level and scan the document again. You can also type a value in the field to set the brightness level.

Contrast

Increase or decrease the contrast level by moving the slider to the right or left. An increase emphasises dark and light areas of the image, while a decrease reveals more details in grey areas. You can also type a value in the field to set the contrast level.

Related Information

- Scan Using Windows Fax and Scan

Scan from Your Computer (Mac)

- Scan Using AirPrint (macOS)

Configure Scan Settings Using Web Based Management

- Set the Scan File Name Using Web Based Management
- Set the Scan Job Email Report Using Web Based Management

Set the Scan File Name Using Web Based Management

Set up a file name for scanned data using Web Based Management.

1. Start Web Based Management. See Access Web Based Management.
2. In the left navigation bar, click **Scan** > **Scan File Name**.

If the left navigation bar is not visible, start navigating from ≡.

3. Select the **File Name Style** from the drop-down list.
4. If you selected the option to include the date in **File Name Style** field, select the date format from the drop-down list.
5. In the **Time** field, select **On** to include the time information in the file name.
6. In the **Counter** field, select **Continuous** or **Reset after each job**.

If you select **Reset after each job**, duplication of file names may occur.

7. If you want to create a user-defined file name prefix, type a file name in the user-defined fields of each scan function.

Do not use the following characters: ? / \ *

8. Click **Submit**.

Related Information

- Configure Scan Settings Using Web Based Management

Related Topics:

- Access Web Based Management

Set the Scan Job Email Report Using Web Based Management

When you scan a document, the machine will send a scan job email report automatically to the registered email address.

1. Start Web Based Management. See Access Web Based Management.
2. In the left navigation bar, click **Scan** > **Scan Job e-mail report**.

If the left navigation bar is not visible, start navigating from ≡.

3. In the **Administrator Address** field, type the email address.
4. For the scan functions you want, select **On** to send a scan job email report.
5. Click **Submit**.

Related Information

- Configure Scan Settings Using Web Based Management

Related Topics:

- Access Web Based Management

Copy

- Copy a Document
- Enlarge or Reduce Copied Images
- Sort Copies
- Make Page Layout Copies (N in 1 or Poster)
- Copy on Both Sides of the Paper (2-sided Copy)
- Copy an ID Card
- Use the A3 Copy Shortcuts
- Copy Settings

Copy a Document

1. Make sure you have loaded the correct size paper in the paper tray.
2. Load your document.
3. Press [Copy].

   The touchscreen displays:

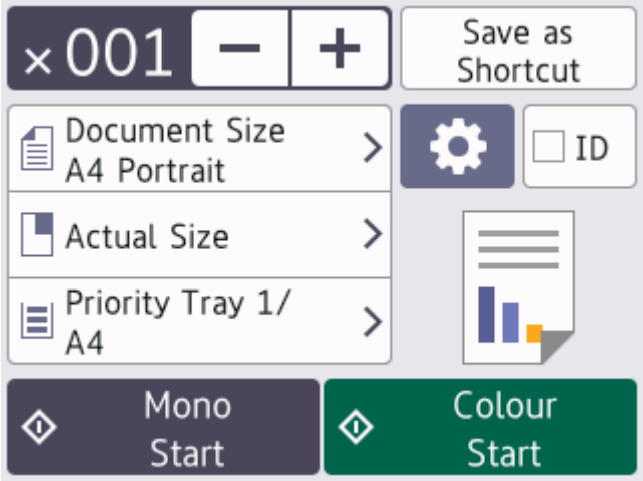

4. Change the copy settings, if needed.

When you load paper other than A4 size plain paper, you must change the [Paper Size] and [Paper Type] settings by pressing [Options].

Option	Description
×001 (No. of Copies)	Enter the number of copies in one of the following ways: • Press − or + on the touchscreen. • Press ×001 to display the keyboard on the touchscreen, and then enter the number of copies using the touchscreen keyboard. Press OK.
(Options)	Press [Options] to change the copy settings for the next copy only. When you have finished changing settings, press OK.
ID	To make an ID card copy with the [2in1 ID Vertical] layout, select the [ID] checkbox.
Current setting indications	Press the area indicated on the screen to change copy settings for the next copy only. • Document Size • Enlarge/Reduce • Select Tray (MFC-J3960DW/MFC-J6960DW/MFC-J6975DW/MFC-J6977DW) • Paper Size (MFC-J3660DW/MFC-J6560DW/MFC-J6760DW)

- After you have finished selecting new options, you can save them by pressing [Save as Shortcut]. To make this a One Touch Shortcut, you must select the [Colour Copy] or [Mono Copy] option in the shortcut. Press [Options] > [One Touch Shortcut], select [Colour Copy] or [Mono Copy], change other settings, and then press [Save as Shortcut].
- (MFC-J6975DW/MFC-J6977DW) To preview the copied result before the machine starts printing, press and then press [Mono Preview] or [Colour Preview]. The machine scans the document and displays **only the first page (one side)** of the copied result on the LCD. If the copied result is fine, press [Start] to print it and to finish processing.

5. Press [Mono Start] or [Colour Start].

To interrupt copying, press .

Related Information

- Copy

Related Topics:

- Load Documents in the Automatic Document Feeder (ADF)
- Load Documents on the Scanner Glass
- Copy Settings

Enlarge or Reduce Copied Images

Select an enlargement or reduction ratio to resize your copied data.

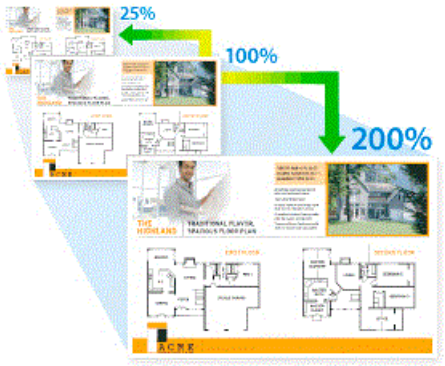

1. Load your document.
2. Press [Copy].
3. Enter the number of copies in one of the following ways:
   - Press [-] or [+] on the touchscreen.
   - Press ×001 to display the keyboard on the touchscreen, and then enter the number of copies using the touchscreen keyboard. Press [OK].
4. Press [Options] > [Enlarge/Reduce].
5. Press ▲ or ▼ to display the available options, and then press the option you want to change.
6. Set the value for the option you selected, as needed.
7. Read and confirm the displayed list of options you have selected, and then press [OK].

(MFC-J6975DW/MFC-J6977DW) To preview the copied result before the machine starts printing, press and then press [Mono Preview] or [Colour Preview]. The machine scans the document and displays **only the first page (one side)** of the copied result on the LCD. If the copied result is fine, press [Start] to print it and to finish processing.

8. When you have finished changing settings, press [Mono Start] or [Colour Start].

If you selected the [Fit to Page] option, your machine adjusts the copy size to fit the paper size set in the machine.

- The [Fit to Page] option does not work correctly when the document on the scanner glass is skewed. Using the document guidelines on the left and top, place the document face down in the upper-left corner of the scanner glass.
- The [Fit to Page] option is not available for Legal size documents.

Related Information

- Copy

Sort Copies

Sort multiple copies. Pages will be stacked in the order they are fed, that is: 1, 2, 3, and so on.

1. Load your document.
2. Press [Copy].
3. Enter the number of copies in one of the following ways:
   - Press [-] or [+] on the touchscreen.
   - Press ×001 to display the keyboard on the touchscreen, and then enter the number of copies using the touchscreen keyboard. Press [OK].
4. Press [Options] > [Stack/Sort] > [Sort].
5. Read and confirm the displayed list of settings you have selected, and then press [OK].

(MFC-J6975DW/MFC-J6977DW) To preview the copied result before the machine starts printing, press and then press [Mono Preview] or [Colour Preview]. The machine scans the document and displays **only the first page (one side)** of the copied result on the LCD. If the copied result is fine, press [Start] to print it and to finish processing.

6. When you have finished changing settings, press [Mono Start] or [Colour Start]. If you placed the document in the ADF, the machine scans the document and starts printing.
7. If you are using the scanner glass, repeat the following steps for each page of the document:
   - Place the next page on the scanner glass, and then press [Continue] to scan the page.
   - After scanning all the pages, press [Finish].

Related Information

- Copy

Make Page Layout Copies (N in 1 or Poster)

The N in 1 copy feature saves paper by copying two or four pages of your document onto one page of the copy. The poster feature divides your document into sections, then enlarges the sections so you can assemble them into a poster. To print a poster, use the scanner glass.

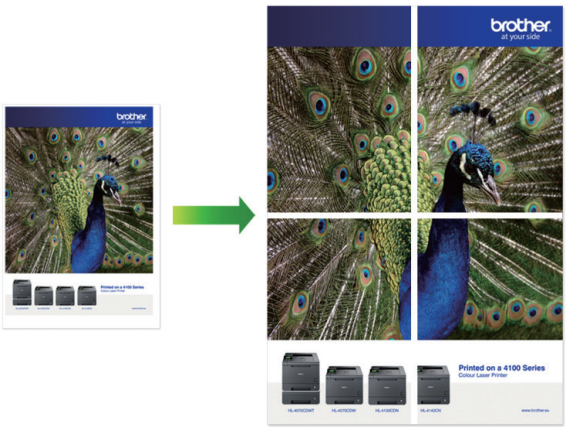

- Make sure the paper size is set to A4, A3, Letter, or Ledger.
- You can make only one Poster copy at a time.

The 1 to 2 feature copies one A3 or Ledger size paper onto two A4 or Letter size papers. You can make only one 1 to 2 copy at a time.

1. Load your document.
2. Press [Copy].
3. Enter the number of copies in one of the following ways:
   - Press [-] or [+] on the touchscreen.
   - Press ×001 to display the keyboard on the touchscreen, and then enter the number of copies using the touchscreen keyboard. Press [OK].
4. Press [Options] > [Page Layout].
5. Press ▲ or ▼ to display the options, and then press the option you want.

Option	Description
Off(1in1)	-
2in1(Portrait)	

Option	Description
2in1(Landscape)	
2in1 ID Vertical (Using the scanner glass)	
2in1 ID Horizontal (Using the scanner glass)	
4in1(Portrait)	
4in1(Landscape)	
1to2 (Using the scanner glass)	
Poster(2x1) (Using the scanner glass)	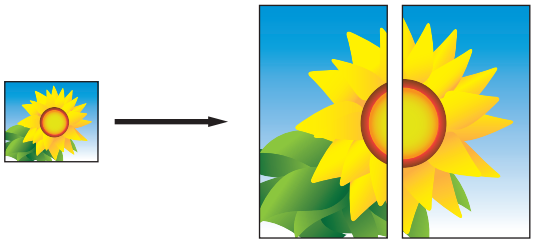
Poster(2x2) (Using the scanner glass)	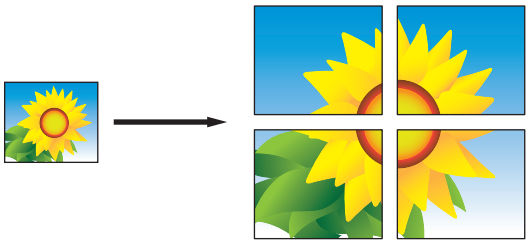
Poster(3x3) (Using the scanner glass)	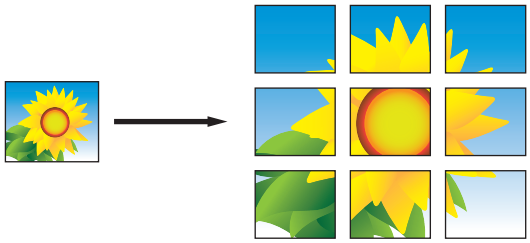

6. Read and confirm the displayed list of settings you have selected, and then press [OK].

(MFC-J6975DW/MFC-J6977DW) To preview the copied result before the machine starts printing, press and then press [Mono Preview] or [Colour Preview]. The machine scans the document and displays **only the first page (one side)** of the copied result on the LCD. If the copied result is fine, press [Start] to print it and to finish processing.

7. When you have finished changing settings, press [Mono Start] or [Colour Start]. If you placed the document in the ADF or are making a poster or 1 to 2 copy, the machine scans the pages and starts printing.
8. If you are using the scanner glass, repeat the following steps for each page of the document:
   - Place the next page on the scanner glass, and then press [Continue] to scan the page.
   - After scanning all the pages, press [Finish].

Related Information

- Copy

Copy on Both Sides of the Paper (2-sided Copy)

Reduce the amount of paper you use by copying onto both sides of the paper.

- You must choose a 2-sided copy layout from the following options before you can start 2-sided copying.
- The layout of your original document determines which 2-sided copy layout you should choose.
- (MFC-J3960DW/MFC-J6760DW/MFC-J6960DW/MFC-J6975DW/MFC-J6977DW)
  You can copy 2-sided documents automatically up to A3 size using the ADF.
- (MFC-J3660DW/MFC-J6560DW)
  When you manually make 2-sided copies from a 2-sided document, use the scanner glass.
- You can use only A4, Letter, A5, A3, Ledger, Legal, Folio, Mexico Legal, or India Legal size plain paper.

Portrait

1–sided to 2–sided (Long Edge Flip)

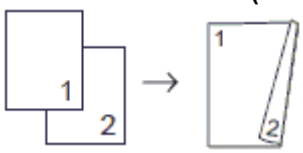

1–sided to 2–sided (Short Edge Flip)

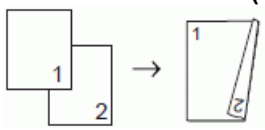

2–sided to 2–sided

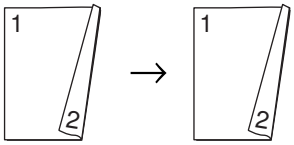

2–sided to 1–sided (Long Edge Flip) (supported models only)

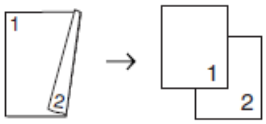

2–sided to 1–sided (Short Edge Flip) (supported models only)

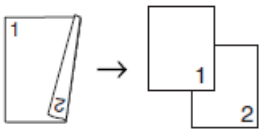

Landscape

1–sided to 2–sided (Long Edge Flip)

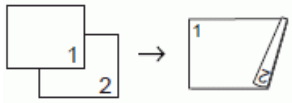

1–sided to 2–sided (Short Edge Flip)

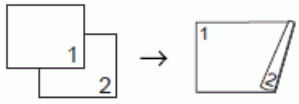

2–sided to 2–sided

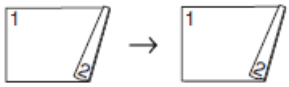

2–sided to 1–sided (Long Edge Flip) (supported models only)

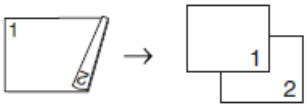

2–sided to 1–sided (Short Edge Flip) (supported models only)

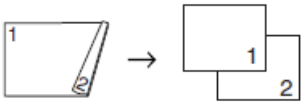

1. Load your document.
2. Press [Copy].
3. Enter the number of copies in one of the following ways:
   - Press [-] or [+] on the touchscreen.
   - Press ×001 to display the keyboard on the touchscreen, and then enter the number of copies using the touchscreen keyboard. Press [OK].
4. To sort multiple copies, press [Options] > [Stack/Sort] > [Sort].
5. Press ▲ or ▼ to display the [2-sided Copy] option, and then press it.
6. Do one of the following:
   - To make 2-sided copies from a 1-sided document, follow these steps:
     a. To change the layout options, press [Layout], and then press [Long Edge Flip] or [Short Edge Flip].
     b. Press [1-sided⇒2-sided].
   - (MFC-J3960DW/MFC-J6760DW/MFC-J6960DW/MFC-J6975DW/MFC-J6977DW)
     To make 2-sided copies of a 2-sided document automatically, press [2-sided⇒2-sided].

Load your document in the ADF to use the automatic 2-sided copy feature.

   - (MFC-J3660DW/MFC-J6560DW)
     To make 2-sided copies of a 2-sided document manually, press [2-sided⇒2-sided].

Use the scanner glass to make 2-sided copies of a 2-sided document manually.

   - (MFC-J3960DW/MFC-J6760DW/MFC-J6960DW/MFC-J6975DW/MFC-J6977DW)
     To make 1-sided copies from a 2-sided document, follow these steps:
     a. To change the layout options, press [Layout], and then press [Long Edge Flip] or [Short Edge Flip].
     b. Press ▲ or ▼ to display the [2-sided⇒1-sided] option, and then press it.

Load your document in the ADF to use the automatic 2-sided copy feature.

7. Review your settings on the touchscreen, and then press [OK].

(MFC-J6975DW/MFC-J6977DW) To preview the copied result before the machine starts printing, press and then press [Mono Preview] or [Colour Preview]. The machine scans the document and displays **only the first page (one side)** of the copied result on the LCD. If the copied result is fine, press [Start] to print it and to finish processing.

8. Press [Mono Start] or [Colour Start]. If you placed the document in the ADF, the machine scans the pages and starts printing.
9. If you are using the scanner glass, repeat the following steps for each page of the document:
   - Place the next page on the scanner glass, and then press [Continue] to scan the page.
   - After scanning all the pages, press [Finish].

DO NOT touch the printed page until it is completely ejected. The machine prints the first side, extends the paper, then retracts it to print the second side.

If you experience smudged printouts or paper jams, press [Ink] > [Print Options] > [Reduce Smudging], and then change settings.

See *Related Information*: *Change the Print Options to Improve Your Print Results*.

Related Information

- Copy

Related Topics:

- Change the Print Options to Improve Your Print Results

Copy an ID Card

Use the [2in1(ID)] feature to copy both sides of an identification card onto one page, keeping the original card size.

- Make sure the paper size is set to A4 or Letter.
- You may copy an identification card to the extent permitted under applicable laws. For more detailed information, see the *Product Safety Guide*.

1. Place your identification card face down near the upper-left corner of the scanner glass.

2 in 1 ID (Vertical)

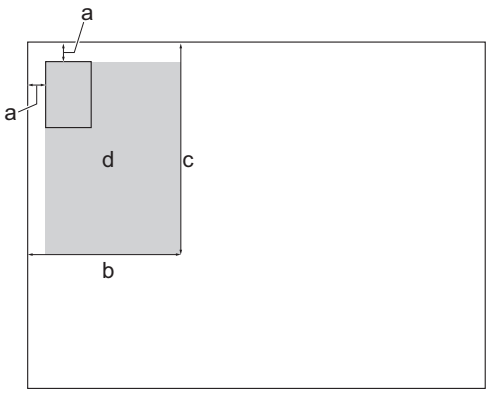

2 in 1 ID (Horizontal)

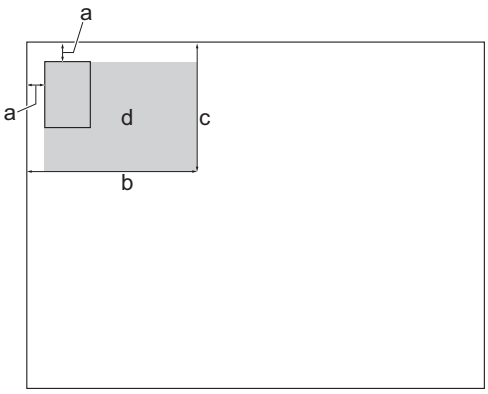

a. 3 mm or greater (top, left)
b. 145 mm
c. 2 in 1 ID (Vertical): 207 mm
   2 in 1 ID (Horizontal): 102 mm
d. Scannable area

2. Press [Copy].
3. Enter the number of copies in one of the following ways:
   - Press [−] or [+] on the touchscreen.
   - Press ×001 to display the keyboard on the touchscreen, and then enter the number of copies using the touchscreen keyboard. Press [OK].
4. Press [Options] > [Page Layout] > [2in1 ID Vertical] or [2in1 ID Horizontal].

You can also press [ID] for the [2in1 ID Vertical] setting.

5. Read and confirm the displayed list of settings you have selected. When you have finished changing settings, press [OK].

(MFC-J6975DW/MFC-J6977DW) To preview the copied result before the machine starts printing, press and then press [Mono Preview] or [Colour Preview]. The machine scans the document and displays **only the first page (one side)** of the copied result on the LCD. If the copied result is fine, press [Start] to print it and to finish processing.

6. Press [Mono Start] or [Colour Start].

   The machine starts scanning one side of the identification card.

7. After the machine has scanned the first side, turn over the identification card and press [Continue] to scan the other side.

Related Information

- Copy

Use the A3 Copy Shortcuts

You can copy your document in A3 or Ledger size paper with a format such as Note style. Also you can make 2 in 1, enlarged and reduced copies.

1. Load your document.
2. Press ◀ or ▶ to display the [A3 Copy Shortcuts] option, and then press it.
3. If information appears on the touchscreen, read it, and then press [OK] to confirm.
4. Press ◀ or ▶ to display options, and then press the option you want.

Option	Description
A3 2in1	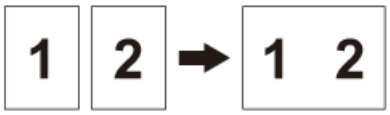
A3	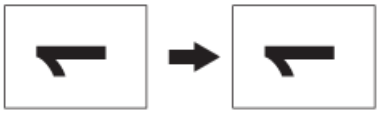
A4⇒A3	
A3⇒A4	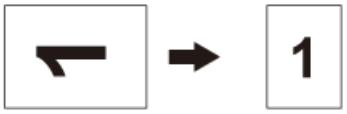
A4 + Note(L)	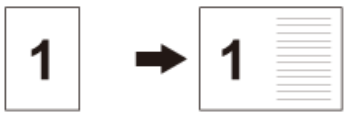
A4 + Note(P)	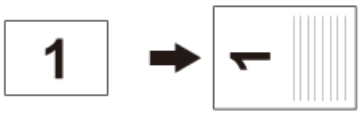
A4 + Grid	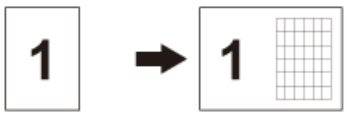
A4 + Blank	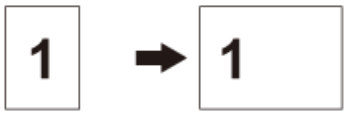
A4 Centre	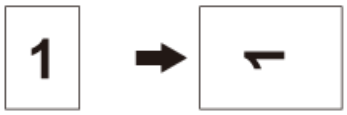

5. Enter the number of copies in one of the following ways:
   - Press [-] or [+] on the touchscreen.
   - Press ×001 to display the keyboard on the touchscreen, and then enter the number of copies using the touchscreen keyboard. Press [OK].
6. To change the settings, press [Options].

7. When you have finished changing settings, press [OK].
8. Press [Mono Start] or [Colour Start].
9. If you are using the scanner glass when choosing the [A3 2in1] option, repeat the following steps for each page of the document:
   - Place the next page on the scanner glass, and then press [Continue] to scan the page.
   - After scanning all the pages, press [Finish].

Related Information

- Copy

Related Topics:

- Touchscreen LCD Overview

Copy Settings

To change copy settings, press [Options].

Option	Description	
Quality	Select the Copy resolution for your type of document.	
One Touch Shortcut	Select the Colour Copy or Mono Copy option when registering a One Touch Shortcut.	
Document Size	Select your document size.	
Select Tray (MFC-J3960DW/ MFC-J6960DW/ MFC-J6975DW/ MFC-J6977DW)	Select the tray with the best paper type and size for your document.	
Paper Type	Select a paper type. If copying on special paper, set the machine for the type of paper you are using to get the best print quality.	
Paper Size	Select a paper size. If copying on paper other than A4 size, you must change the Paper Size setting.	
Enlarge/Reduce	100%	-
	Fit to Page	Adjusts the copy size to fit on the paper size you have set.
	Enlarge	Select an enlargement ratio for the next copy.
	Reduce	Select a reduction ratio for the next copy.
	Custom(25-400%)	Enter an enlargement or reduction ratio.
Density	Increase the density to make the text darker. Decrease the density to make the text lighter.	
Remove Background Colour	Removes the document's background colour in copies. The white becomes more apparent. This saves some ink and may make certain copies easier to read. 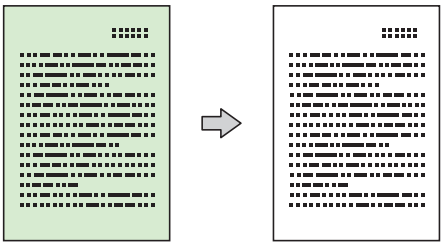	
2-sided Copy	Select to copy on both sides of the paper. **1-sided→2-sided** 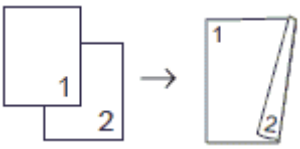 **2-sided→2-sided** 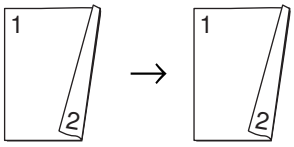 **2-sided→1-sided** (MFC-J3960DW/MFC-J6760DW/MFC-J6960DW/MFC-J6975DW/MFC-J6977DW)	

Option	Description
	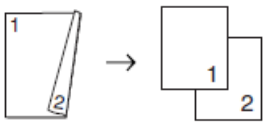
Stack/Sort	Select to stack or sort multiple copies.
	Stack 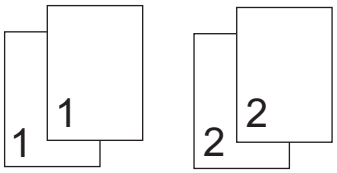 **Sort** 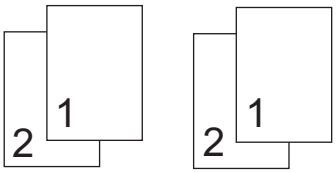
Page Layout	Make N in 1, 2 in 1 ID, 1 to 2, or Poster copies.
	4 in 1 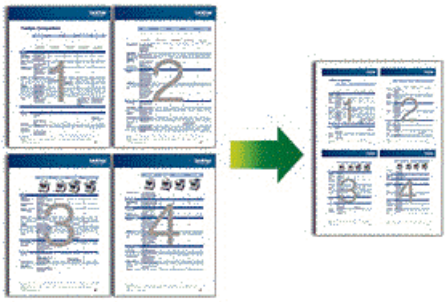 **Poster** 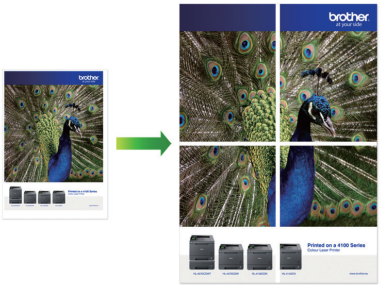
Auto Deskew	Set the machine to automatically correct skewed copies.
Advanced Settings	`Book Copy` Corrects dark borders and skew when copying from the scanner glass. 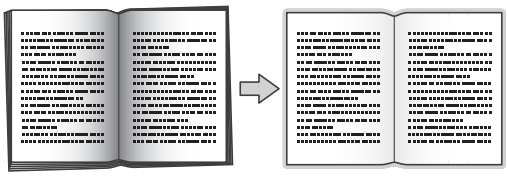
	`Watermark Copy` Places text in your document as a watermark.
Preview (MFC-J6975DW/ MFC-J6977DW)	Preview the copied result on the LCD, before the machine starts printing.
Set New Default	Saves the copy settings that you use most often by setting them as the default settings.
Factory Reset	Restores any changed copy settings to the factory settings.

You can save the current settings by pressing `[Save as Shortcut]`.

To make this a One Touch Shortcut, you must select the `[Colour Copy]` or `[Mono Copy]` option in the shortcut. Press `[Options]` > `[One Touch Shortcut]`, select `[Colour Copy]` or `[Mono Copy]`, change other settings, and then press `[Save as Shortcut]`.

Related Information

- Copy

Related Topics:

- Copy a Document

Fax

- Initial Fax Setup and Telephone Services
- Send a Fax
- Receive a Fax
- Fax Numbers
- Fax Reports
- External Devices
- PC-FAX
- I-Fax (Fax Using the Internet)

Initial Fax Setup and Telephone Services

- Set Your Station ID
- Set Tone or Pulse Dialling Mode
- Set the Telephone Line Type
- Voice Over Internet Protocol (VoIP/Telephone Line Interference)

Set Your Station ID

Set the machine's Station ID if you want the date and time to appear on each fax you send.

1. Press [Settings] > [All Settings] > [Initial Setup] > [Station ID].
2. Press [Fax].
3. Enter your fax number (up to 20 digits) on the touchscreen, and then press [OK].
4. Press [Name].
5. Enter your name (up to 20 characters) using the touchscreen, and then press [OK].

- Press [A 1 @] to cycle between letters, numbers and special symbols. (The available characters may differ depending on your country.)
- If you entered an incorrect character and want to change it, press ◀ or ▶ to move the cursor to it. Press [⌫] and then enter the correct character.
- To enter a space, press [Space].

6. Press [⌂].

Related Information

- Initial Fax Setup and Telephone Services

Related Topics:

- Enter Text on Your Brother Machine
- Set the Date and Time

Set Tone or Pulse Dialling Mode

Your machine is set for a Tone dialling service. If you have a Pulse dialling (rotary) service, you must change the dialling mode.

This feature is not available in some countries.

1. Press [Settings] > [All Settings] > [Initial Setup] > [Tone/Pulse].
2. Press [Tone] or [Pulse].
3. Press .

Related Information

- Initial Fax Setup and Telephone Services

Set the Telephone Line Type

If you are connecting the machine to a line that features PBX or ISDN to send and receive faxes, you must select a Telephone Line Type that matches your line's features.

1. Press [Settings] > [All Settings] > [Initial Setup] > [Phone Line Set].
2. Press [Normal], [PBX], or [ISDN].
3. If you selected [PBX], do the following steps:
   a. Press [On] or [Always].

   - If you select [On], the machine dials a prefix number before the fax number only when [R] is pressed.
   - If you select [Always], the machine always dials a prefix number before the fax number.

   b. Press [Dial Prefix].
   c. Enter the prefix number using the touchscreen, and then press [OK].

   Use the numbers 0 to 9, #, * and !. You cannot use ! with any other numbers or characters.

4. Press .

Related Information

- Initial Fax Setup and Telephone Services
  - PBX and TRANSFER

PBX and TRANSFER

The machine's [Phone Line Set] default setting is [Normal], which lets the machine connect to a standard Public Switched Telephone Network (PSTN) line. However, many offices use a central telephone system or Private Branch Exchange (PBX). Your machine can be connected to most types of PBX. The machine's recall feature supports timed break recall only (TBR). TBR will work with most PBX systems allowing you to gain access to an outside line, or transfer calls to another extension. Press [R] to use this feature.

Program a press of the [R] button as part of a number stored in the Address Book. When programming the Address Book number, press [R] first (the LCD displays '!'), then enter the telephone number. This avoids having to press [R] each time before you dial from the Address Book. However, your Telephone Line Type must be set to PBX on the machine for you to use this feature.

Related Information

- Set the Telephone Line Type

Voice Over Internet Protocol (VoIP/Telephone Line Interference)

VoIP is a type of phone system that uses an Internet connection instead of a traditional telephone line. Telephone providers frequently bundle VoIP together with Internet and cable services.

Your machine may not work with some VoIP systems. If you want to use your machine to send and receive faxes on a VoIP system, make sure one end of your telephone cord is connected to the socket labelled LINE on your machine. The other end of the telephone cord may be connected to a modem, phone adapter, splitter, or other such device.

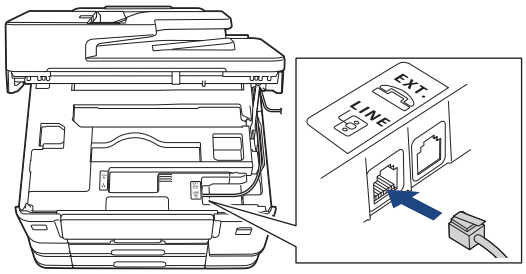

If you have questions about how to connect your machine to the VoIP system, please contact your VoIP provider.

After you have connected your machine to the VoIP system, check for a dial tone. Lift the external telephone's handset and listen for a dial tone. If there is no dial tone, please contact your VoIP provider.

If you are having problems sending or receiving faxes over a VoIP system, we recommend changing the machine's modem speed to the `[Basic(for VoIP)]` setting.

Related Information

- Initial Fax Setup and Telephone Services

Send a Fax

- Send a Fax from Your Brother Machine
- Send a Fax Manually
- Send the Same Fax to More than One Recipient (Broadcasting)
- Fax Options

Send a Fax from Your Brother Machine

1. Load your document.
2. Press [Fax].

If [Fax Preview] is set to [On], press [Fax] > [Sending Faxes].

The touchscreen displays:

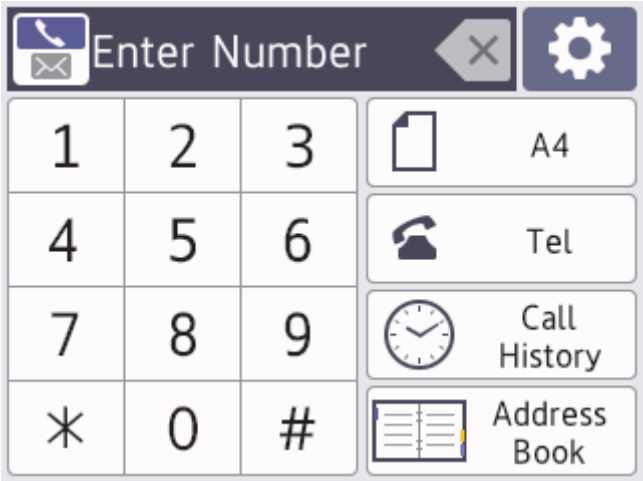

3. Enter the fax number in one of the following ways:
   - Dial Pad (Enter the fax number manually.)

     Press all digits of the number using the dial pad.
   - Call History (Select a number from the Call History.)

     Press [Call History].

     Press [Redial], [Outgoing Call] or [Caller ID History].

     If you select [Outgoing Call] or [Caller ID History], select the number you want, and then press [Apply].
   - [Address Book] (Select a number from the Address Book.)

     Press [Address Book].

     Do one of the following:
     - Select the number you want, and then press [Apply].
     - Press , and then enter the first letter of the name and press [OK]. Press the name you want to dial. If the name has two numbers, press the number you want. Press [Apply].

If the LDAP search is available, the result will be shown on the touchscreen with .

4. Change the fax settings, if needed.

Option	Description
Options	Press Options to change the fax settings for the next fax only. When finished, press OK.
Document Size	Indicates the current Document Size setting. Press to change the setting for the next fax only.

5. Press [Fax Start].
   - If you are using the ADF, the machine starts scanning and sending the document.
   - If you are using the scanner glass and selected [Mono] in [Colour Setting], the machine starts scanning the first page.

     Go to the next step.
   - If you are using the scanner glass and selected [Colour] in [Colour Setting], the touchscreen asks if you want to send a colour fax.

     Press [Yes (Colour fax)] to confirm. The machine starts dialling and sending the document.
6. When the touchscreen displays [Next page?], do one of the following:
   - Press [No] when finished scanning pages. The machine starts sending the document.
   - Press [Yes] to scan another page. Place the next page on the scanner glass, and then press [OK]. The machine starts scanning the page.

   Repeat this step for each additional page.

To stop faxing, press , and then press .

When the LCD displays [Cancel Job?], press [Yes].

Related Information

- Send a Fax

Related Topics:

- Fax Options

Send a Fax Manually

Manual fax transmission lets you hear the dialling, ringing and fax-receiving tones while sending a fax.

1. Load your document.
2. To listen for a dial tone, pick up the handset of the external telephone.
3. Dial the fax number using the external telephone.
4. When you hear fax tones, press ⮌ and then press [Fax Start].

   If using the scanner glass, press [Send].
5. Replace the handset of the external phone.

Related Information

- Send a Fax

Send the Same Fax to More than One Recipient (Broadcasting)

Use the Broadcasting feature to send the same fax to multiple fax numbers at the same time.

- This feature is available only for monochrome faxes.
- Address Book numbers must be stored in the machine's memory before they can be used in a broadcast.
- Group numbers must also be stored in the machine's memory before they can be used in a broadcast. Group numbers include many stored Address Book numbers for easier dialling.

You can include Groups, Address Book numbers, and up to 50 manually-dialled numbers in the same broadcast.

If you did not use any of the Address Book numbers for Groups, you can broadcast faxes to as many as 250 different numbers.

1. Load your document.
2. Press [Fax].

   If [Fax Preview] is set to [On], press [Fax] > [Sending Faxes].

3. Press [Options] > [Broadcasting].
4. Press [Add Number].

   You can add numbers to the broadcast in the following ways:

   - Press [Add Number] and enter a fax number using the dial pad. Press [OK].

     To broadcast using an email address, press , enter the email address, and press [OK].

   - Press [Add from Address book]. Press ▲ or ▼ to display the numbers you want to add to the broadcast. Select the checkboxes of the numbers you want to add.

     When finished, press [OK].

   - Press [Search in Address book]. Press the first letter of the name and press [OK]. Press the name, and then press the number you want to add.

   Repeat this step to enter additional fax numbers.

5. When finished, press [OK].
6. Press [Fax Start].
7. Do one of the following:

   - If you are using the ADF, the machine starts scanning and sending the document.
   - If you are using the scanner glass, the machine starts scanning the first page.

     When the touchscreen displays [Next page?], do one of the following:

     - Press [No] when finished scanning pages. The machine starts sending the document.
     - Press [Yes] to scan another page. Place the next page on the scanner glass, and then press [OK]. The machine starts scanning the page.

     Repeat this step for each additional page.

Related Information

- Send a Fax

Related Topics:

- Set up Broadcasting Groups

- Enter Text on Your Brother Machine

Fax Options

To change fax-sending settings, press [Options].

Option	Description
Fax Resolution	Set the resolution for outgoing faxes. The fax quality often can be improved by changing the Fax Resolution.
Contrast	Adjust the contrast. If your document is very light or very dark, changing the contrast may improve the fax quality.
2-sided Fax (MFC-J3960DW/MFC-J6760DW/ MFC-J6960DW/MFC-J6975DW/ MFC-J6977DW)	Set the 2-sided scanning format.
Document Size	Set the document size for outgoing faxes.
Scan Long Paper	Scan a long document using the ADF.
Sender Subject	Edit the subject of an outgoing fax.
Broadcasting (monochrome only)	Send the same fax message to more than one fax number at the same time.
Preview (monochrome only)	Preview a fax message before you send it.
Colour Setting	Set whether faxes are sent in monochrome or colour. • Colour faxes cannot be stored in the machine's memory and the machine sends them immediately. • Use the ADF to send colour faxes with multiple pages. • You cannot send a colour fax when Preview is set to On.
Delayed Fax (monochrome only)	Set the time of day the delayed faxes will be sent.
Batch TX (monochrome only)	Economise by sending all delayed faxes scheduled for the same time and fax number as one fax to save transmission time.
Real Time TX	Send a fax immediately without waiting for the machine to retrieve the scan from its memory.
Overseas Mode	Set to On if you have difficulty sending faxes overseas.
Call History	Select a number from the Call History.
Address Book	Select a number from the Address Book.
Set New Default	Save your settings as the default.
Factory Reset	Restore all settings back to the factory settings.

You can save the current settings by pressing [Save as Shortcut].

You will be asked if you want to make this a One Touch Shortcut. Follow the LCD instructions.

Related Information

- Send a Fax

Related Topics:

- Send a Fax from Your Brother Machine

Receive a Fax

- Receive Mode Settings
- Set Fax Detect
- Fax Preview
- Memory Receive Options

Receive Mode Settings

- Receive Modes Overview
- Choose the Correct Receive Mode
- Set the Number of Rings Before the Machine Answers (Ring Delay)
- Set the F/T Ring Time (Pseudo/Double-ring)

Receive Modes Overview

Some receive modes answer automatically (`[Fax Only]` and `[Fax/Tel]`). You may want to change the Ring Delay before using these modes.

Fax Only

`[Fax Only]` mode automatically answers every call as a fax.

Fax/Tel

`[Fax/Tel]` mode helps you manage incoming calls, by recognising whether they are fax or voice calls and handling them in one of the following ways:

- Faxes are received automatically.
- Voice calls start the F/T ring to tell you to pick up the line. The F/T ring is a pseudo/double-ring made by your machine.

Manual

`[Manual]` mode turns off all automatic answering functions (unless you are using the BT Call Sign feature).

To receive a fax in `[Manual]` mode, lift the handset of the external telephone. When you hear fax tones (short repeating beeps), press the Start button, and then select `[Receive]` to receive a fax. You can also use the Fax Detect feature to receive faxes by lifting a handset on the same line as the machine.

External TAD

`[External TAD]` mode lets an external answering device manage your incoming calls.

Incoming calls are handled in the following ways:

- Faxes are received automatically.
- Voice callers can record a message on the external TAD.

Related Information

- Receive Mode Settings

Related Topics:

- Set the Number of Rings Before the Machine Answers (Ring Delay)
- Set the F/T Ring Time (Pseudo/Double-ring)
- Set Fax Detect

Choose the Correct Receive Mode

You must choose a Receive Mode depending on the external devices and telephone services you have on your line.

By default, your machine automatically will receive any faxes that are sent to it. The diagram below will help you select the correct mode.

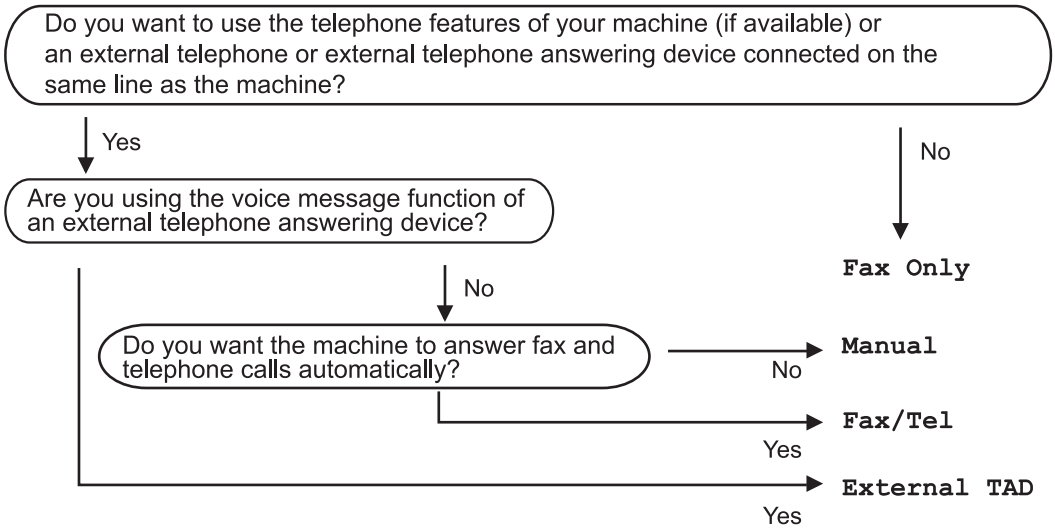

1. Press [Settings] > [All Settings] > [Fax] > [Setup Receive] > [Receive Mode].

If the option to change the Receive Mode is unavailable, make sure the BT Call Sign feature is set to [Off].

2. Press ▲ or ▼ to display the [Fax Only], [Fax/Tel], [External TAD], or [Manual] option, and then press the option you want.
3. Press .

Related Information

- Receive Mode Settings

Set the Number of Rings Before the Machine Answers (Ring Delay)

When somebody calls your machine, you will hear the normal telephone ring sound. The number of rings is set in the Ring Delay option.

- The Ring Delay setting sets the number of times the machine rings before it answers in [Fax Only] and [Fax/Tel] modes.
- If you have external or extension telephones on the same line as the machine, select the maximum number of rings.

1. Press [Settings] > [All Settings] > [Fax] > [Setup Receive] > [Ring Delay].
2. Press the number of times you want the line to ring before the machine answers.

If you select [0], the machine answers immediately and the line will not ring at all. (available only for some countries)

3. Press .

Related Information

- Receive Mode Settings

Related Topics:

- Receive Modes Overview
- Set Fax Detect

Set the F/T Ring Time (Pseudo/Double-ring)

When you set the Receive Mode to [Fax/Tel], if the call is a fax, your machine will receive it automatically. However, if it is a voice call, the machine will sound the F/T ring (pseudo/double-ring) for the time you set in the F/T Ring Time option. When you hear the F/T ring, it means that a voice caller is on the line.

Because the F/T ring is a setting only on your Brother machine, extension and external telephones will not ring; however, you can still answer the machine's call on any telephone.

1. Press [Settings] > [All Settings] > [Fax] > [Setup Receive] > [F/T Ring Time].
2. Press how long the machine will double-ring to alert you to a voice call.
3. Press .

Even if the caller hangs up during the pseudo/double-ringing, the machine will continue to ring for the set time.

Related Information

- Receive Mode Settings

Related Topics:

- Receive Modes Overview

Set Fax Detect

If Fax Detect is On: The machine receives a fax call automatically, even if you answer the call. When the message that your machine is receiving a fax appears on the LCD or when you hear “chirps” through the handset you are using, just replace the handset. Your machine will do the rest.

If Fax Detect is Off: If you are at the machine and answer a fax call by lifting the handset, press the Start button, and then select [Receive] to receive the fax. If you answered at an extension or external telephone, press ***51**.

- If Fax Detect is set to [On], but your machine does not connect a fax call when you lift an extension or external telephone handset, press the remote activation code ***51**.
- If you send faxes from a computer on the same telephone line and the machine intercepts them, set Fax Detect to [Off].

1. Press [Settings] > [All Settings] > [Fax] > [Setup Receive] > [Fax Detect].
2. Press [On] (or [Off]).
3. Press .

Related Information

- Receive a Fax

Related Topics:

- Receive Modes Overview
- Set the Number of Rings Before the Machine Answers (Ring Delay)

Fax Preview

Use the Fax Preview feature to view received faxes on the LCD.

- Set Fax Preview to On
- Preview New Faxes

Set Fax Preview to On

- This feature is available only for monochrome faxes.
- When Fax Preview is turned on, a backup copy of received faxes will not be printed for Fax Forwarding, PC-Fax Receiving, Forward to Cloud, and Forward to Network operations, even if you set Backup Print to On.
- Although printed faxes show the received date and time when Fax Receive Stamp is turned on, the Fax Preview screen will not display the received date and time.

1. Press [Settings] > [Fax Preview].
2. Press [On].

   The touchscreen displays a message saying future received faxes will not be printed.
3. Press [Yes].
4. Press .

If faxes are stored in the memory when you change Fax Preview to Off, do one of the following:

- If you do not want to print the stored faxes, press [Continue].
  Press [Yes] to confirm.

  Your faxes will be deleted.
- To print all the stored faxes, press [Print All Faxes Before Delete].
- If you do not want to turn off Fax Preview, press [Cancel].

Related Information

- Fax Preview

Preview New Faxes

When a fax is received, a message appears on the LCD.

- This feature is available only for monochrome faxes.
- To see a fax you already previewed, press [Fax] and [Received Faxes].

1. Press to view new faxes.

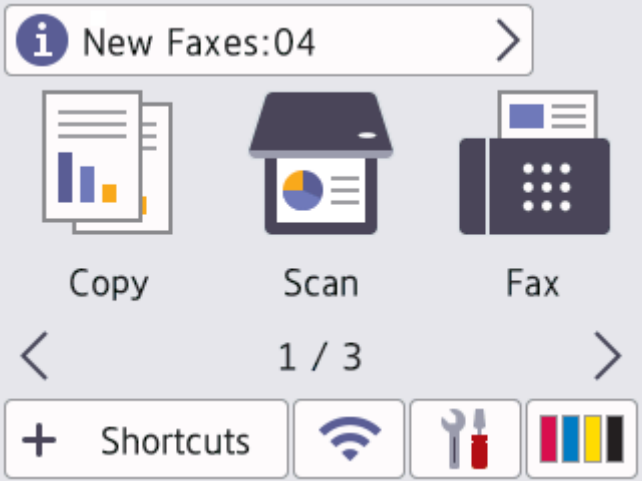

2. The fax list includes old and new faxes. A green mark appears next to new faxes.
   Press the fax you want.

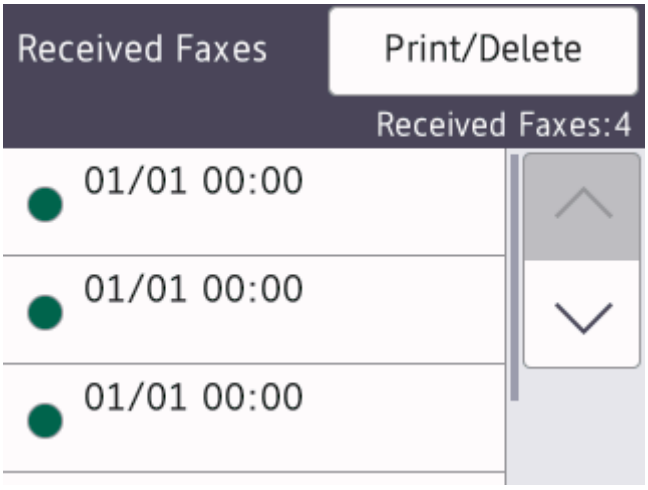

If you want to print or delete all the faxes in the list, press [Print/Delete].
Do one of the following:
- Press [Print All(New Faxes)] to print all faxes you have not yet viewed.
- Press [Print All(Old Faxes)] to print all faxes you have viewed.
- Press [Delete All(New Faxes)] to delete all faxes you have not yet viewed.
- Press [Delete All(Old Faxes)] to delete all faxes you have viewed.

3. Perform the following operations by pressing the buttons shown in the table:

Button	Result
	Enlarge the fax.

Button	Result
	Reduce the fax.
or	Scroll vertically.
or	Scroll horizontally.
	Rotate the fax clockwise.
	Delete the fax. Press `Yes` to confirm.
	Go back to the previous page.
	Go to the next page.
	Go back to the fax list.
`Start`	Print the fax. If the fax is a single page, it starts printing. A touchscreen message asks if you want to delete the fax from the machine's memory. To delete the fax, press `Yes`. To keep the fax in the machine's memory, press `No`. If the fax has multiple pages, do one of the following: • Press `Print All Pages` to print the whole message. A touchscreen message asks if you want to delete the fax from the machine's memory. To delete the fax, press `Yes`. To keep the fax in the machine's memory, press `No`. • Press `Print Displayed Only` to print only the displayed page. • Press `Print From Displayed` to print from the displayed page to the last page.

- If your fax is large there may be a delay before it is displayed.
- The touchscreen displays the current page number and total pages of the fax message.

4. Press .

Related Information

- Fax Preview

Memory Receive Options

Use Memory Receive options to direct incoming faxes while you are away from the machine. You can use only one Memory Receive option at a time.

Memory Receive can be set to:

- PC-Fax Receive
- Fax Forwarding
- Fax Storage
- Forward to Cloud (The machine forwards your received faxes to the online services.)
- Forward to Network (The machine forwards your received faxes to a network destination.)
- Off

This feature is available only for monochrome faxes.

Fax Numbers

- Store Address Book Numbers
- Change or Delete Address Book Names or Numbers
- Set up Broadcasting Groups

Store Address Book Numbers

1. Press [Fax] > [Address Book].
2. Do the following steps:
   a. Press [Edit] > [Add New Address] > [Name].
   b. Enter the name (up to 16 characters) using the touchscreen. Press [OK].
   c. Press [Address 1].
   d. Enter the first fax or telephone number (up to 20 digits) using the touchscreen. Press [OK].

   - Press [Pause] to insert a pause between numbers. You can press [Pause] as many times as needed to increase the length of the pause.
   - Be sure to include the area code when entering a fax or telephone number. Depending on the country, the Caller ID names and history may not be displayed correctly if the area code is not registered with the fax or telephone number.
   - To store an email address to use with Internet Fax or Scan to E-mail server, press and enter the email address, and then press [OK].

   e. To store the second fax or telephone number, press [Address 2]. Enter the second fax or telephone number (up to 20 digits) using the touchscreen. Press [OK].
   f. Press [OK] to confirm.

   To store another Address Book number, repeat these steps.
3. Press .

Related Information

- Fax Numbers

Related Topics:

- Set up Broadcasting Groups

Change or Delete Address Book Names or Numbers

1. Press [Fax] > [Address Book] > [Edit].
2. Do one of the following:
   - Press [Change] to edit the names or fax or telephone numbers.

     Press ▲ or ▼ to display the number you want to change, and then press it.

     - To change the name, press [Name]. Enter the new name (up to 16 characters) using the touchscreen. Press [OK].
     - To change the first fax or telephone number, press [Address 1]. Enter the new fax or telephone number (up to 20 digits) using the touchscreen. Press [OK].
     - To change the second fax or telephone number, press [Address 2]. Enter the new fax or telephone number (up to 20 digits) using the touchscreen. Press [OK].

     Press [OK] to finish.

To change a character, press ◀ or ▶ to position the cursor to highlight the character you want to change, and then press ⌫. Enter the new character.

   - To delete numbers, press ▲ or ▼ to display [Delete], and then press it.

     Select the fax or telephone numbers you want to delete by pressing them to display check marks, and then press [OK].
3. Press 🏠.

Related Information

- Fax Numbers

Set up Broadcasting Groups

Creating and sending to a Group, which can be stored in the Address Book, allows you to send the same fax message to many fax numbers, or Broadcast.

First, you must store each fax number in the Address Book. Then, you can include them as numbers in the Group. Each Group uses up an Address Book number. You can store up to six Groups or you can assign up to 198 numbers to a large Group.

1. Press [Fax] > [Address Book].
2. Do the following steps:
   a. Press [Edit] > [Setup Groups] > [Name].
   b. Enter the Group name (up to 16 characters) using the touchscreen. Press [OK].
   c. Press [Add/Delete].
   d. Add Address Book numbers to the Group by pressing them to display a checkmark. Press [OK].
   e. Read and confirm the displayed list of names and numbers you have selected, and then press [OK] to save your Group.

   To store another Group for broadcasting, repeat these steps.

   To edit a Group, press [Edit], and then select one of the following options:
   - [Change]

     Change the Group name; add or delete Group members.
   - [Delete]

     Delete a Group.
3. Press .

Related Information

- Fax Numbers

Related Topics:

- Send the Same Fax to More than One Recipient (Broadcasting)
- Store Address Book Numbers

Fax Reports

- Set the Transmission Verification Report's Style
- Set the Fax Journal's Interval Period
- Print Reports

Set the Transmission Verification Report's Style

You can use the Transmission Verification Report as proof that you sent a fax. This report lists the receiving party's name or fax number, the time and date of transmission, duration of transmission, number of pages sent, and whether or not the transmission was successful.

There are several settings available for the Transmission Verification Report:

Option	Description
On	Prints a report after every fax you send.
On(+Image)	Prints a report after every fax you send. A portion of the fax's first page appears on the report.
Error only	Prints a report if your fax is unsuccessful due to a transmission error.
Error only(+Image)	Prints a report if your fax is unsuccessful due to a transmission error. A portion of the fax's first page appears on the report.
Off	The report will not be printed.

1. Press [Settings] > [All Settings] > [Fax] > [Report Setting] > [XMIT Report].
2. Press the option you want.

   If you select [On(+Image)] or [Error only(+Image)], the image will not appear on the Transmission Verification Report if Real Time Transmission is set to [On]. The image will not appear on the report when you send a colour fax.
3. Press .

   If the transmission is successful, [OK] appears next to [RESULT] on the Transmission Verification Report. If the transmission is not successful, [ERROR] appears next to [RESULT].

Related Information

- Fax Reports

Set the Fax Journal's Interval Period

You can set the machine to print a Fax Journal at specific intervals (every 50 faxes, 6, 12 or 24 hours, 2 or 7 days).

1. Press [Settings] > [All Settings] > [Fax] > [Report Setting] > [Journal Period].
2. Press [Journal Period].
3. Press ▲ or ▼ to select an interval.
   - 6, 12, 24 hours, 2 or 7 days

     The machine will print the report at the selected interval and then erase all fax jobs from the Journal's memory. If the memory becomes full with 200 jobs before the time you selected has passed, the machine will print the Journal early and then erase all fax jobs from the memory. If you want an extra report before it is due to print, you can print it without erasing the jobs.
   - Every 50 Faxes

     The machine will print the Journal when the machine has stored 50 fax jobs.
4. If you selected 6, 12, 24 hours, 2 or 7 days, press [Time] and enter the time of day using the touchscreen. Press [OK].
5. If you selected [Every 7 Days], press [Day]. Press ▲ or ▼ to display the [Every Monday], [Every Tuesday], [Every Wednesday], [Every Thursday], [Every Friday], [Every Saturday] or [Every Sunday] option, and then press the first day of the seven-day countdown.
6. Press .

Related Information

- Fax Reports

Related Topics:

- Set the Machine to Power Off Automatically

External Devices

For more information about External Devices, go to your model's *External Devices Guide* at support.brother.com/g/s/id/htmldoc/common/exdevs_ink/uke/index.html.

PC-FAX

For more information about PC-FAX features, go to your model's *PC-FAX Guide* at support.brother.com/g/s/id/htmldoc/common/pcfax/uke/index.html.

I-Fax (Fax Using the Internet)

For more information about Internet Fax (I-Fax) features, go to your model's *I-FAX Guide* at support.brother.com/g/s/id/htmldoc/common/ifax_ink/uke/index.html.

Network

- Supported Basic Network Features
- Configure Network Settings
- Wireless Network Settings
- Network Features
- Brother Management Tools

Supported Basic Network Features

The machine supports various features depending on the operating system. Use this table to see which network features and connections are supported by each operating system.

Operating Systems	Windows	Windows Server	macOS
Printing	Yes	Yes	Yes
Scanning	Yes	No	Yes
PC Fax Send	Yes	No	Yes
PC Fax Receive	Yes	No	No
Web Based Management	Yes	Yes	Yes

NOTE

- When connecting your machine to an outside network such as the Internet, make sure your network environment is protected by a separate firewall or other means in order to prevent information leaks due to inadequate settings or unauthorised access by malicious third parties.
- When your machine is connected to the global network, a warning appears. When you see this warning, we strongly recommend confirming your network settings, and then re-connecting to a secure network.
- Enabling your machine's global network communication filtering feature blocks access from the global network. The global network communication filtering feature may prevent the machine from receiving certain print or scan jobs from a computer or mobile device that uses a global IP address.

Related Information

- Network

Related Topics:

- Access Web Based Management
- Change the Login Password Using Web Based Management

Configure Network Settings

- Configure Network Settings Using the Control Panel
- Change Machine Settings Using Web Based Management

Configure Network Settings Using the Control Panel

To configure the machine for your network, use the control panel's [Network] menu selections.

- For information about the network settings you can configure using the control panel, see *Related Information*: *Settings Tables*.
- You can also use management utilities, such as Web Based Management, to configure and change your Brother machine's network settings.

1. Press [Settings] > [Network].
2. Press the option you want. Repeat this step until you access the menu you want to configure, and then follow the touchscreen LCD instructions.

Related Information

- Configure Network Settings

Related Topics:

- Settings Tables (2.7"(67.5 mm)/3.5"(87.6 mm) Touchscreen models)

Wireless Network Settings

- Use the Wireless Network
- Use Wi-Fi Direct®
- Enable/Disable Wireless LAN
- Print the WLAN Report

Use the Wireless Network

- Before Configuring Your Machine for a Wireless Network
- Configure Your Machine for a Wireless Network Using the Setup Wizard from Your Computer
- Configure Your Machine for a Wireless Network Using the Setup Wizard from Your Mobile Device
- Configure Your Machine for a Wireless Network Using the Machine's Control Panel Setup Wizard
- Configure Your Machine for a Wireless Network Using the One Push Method of Wi-Fi Protected Setup™ (WPS)
- Configure Your Machine for a Wireless Network Using the PIN Method of Wi-Fi Protected Setup™ (WPS)
- Configure Your Machine for a Wireless Network When the SSID is Not Broadcast
- Configure Your Machine for an Enterprise Wireless Network

Before Configuring Your Machine for a Wireless Network

Before attempting to configure a wireless network, confirm the following:

- If you are using an enterprise wireless network, you must know the User ID and Password.
- To achieve optimum results with normal everyday document printing, place your machine as close to the wireless LAN access point/router as possible with minimal obstructions. Large objects and walls between the two devices and interference from other electronic devices can affect the data transfer speed of your documents.

  Due to these factors, wireless may not be the best method of connection for all types of documents and applications. If you are printing large files, such as multi-page documents with mixed text and large graphics, you may want to consider selecting wired Ethernet for faster data transfer (supported models only), or USB for the fastest throughput speed.
- Although your machine can be used in a wired and wireless network (supported models only), only one connection method can be used at a time. However, a wireless network connection and Wi-Fi Direct connection, or a wired network connection (supported models only) and Wi-Fi Direct connection can be used at the same time.
- If there is a signal in the vicinity, wireless LAN allows you to freely make a LAN connection. However, if security settings are not correctly configured, the signal may be intercepted by malicious third-parties, possibly resulting in:
  - Theft of personal or confidential information
  - Improper transmission of information to parties impersonating the specified individuals
  - Dissemination of transcribed communication contents that were intercepted

Make sure you know your wireless router/access point's Network Name (SSID) and Network Key (Password). If you cannot find this information, consult the manufacturer of your wireless router/access point, your system administrator, or Internet provider. Brother cannot provide this information.

Related Information

- Use the Wireless Network

Configure Your Machine for a Wireless Network Using the Setup Wizard from Your Computer

1. Do one of the following:
   - Windows

     Download the installer from your model's **Downloads** page at support.brother.com/downloads.
   - Mac

     a. Download the installer from your model's **Downloads** page at support.brother.com/downloads.

     b. Start the installer, and then double-click the **Start Here Mac** icon.
2. Follow the on-screen instructions.
3. Select **Wireless Network Connection (Wi-Fi)**, and then click **Next**.
4. Follow the on-screen instructions.

You have completed the wireless network setup.

Related Information

- Use the Wireless Network

Configure Your Machine for a Wireless Network Using the Setup Wizard from Your Mobile Device

1. Do one of the following:
   - Android™ devices

     Download and install Brother Mobile Connect from Google Play™.
   - All iOS or iPadOS supported devices including iPhone, iPad and iPod touch

     Download and install Brother Mobile Connect from the App Store.
2. Start Brother Mobile Connect, and then follow the on-screen instructions to connect your mobile device to your Brother machine.

Related Information

- Use the Wireless Network

Configure Your Machine for a Wireless Network Using the Machine's Control Panel Setup Wizard

Before configuring your machine, we recommend writing down your wireless network settings. You will need this information before you continue with the configuration.

1. Check and record the current wireless network settings of the computer to which you are connecting.

Network Name (SSID)	Network Key (Password)

For example:

Network Name (SSID)	Network Key (Password)
HELLO	12345

- Your access point/router may support the use of multiple WEP keys, but your Brother machine supports the use of only the first WEP key.
- If you need assistance during setup and want to contact Brother customer service, make sure you have your SSID (Network Name) and Network Key (Password) ready. We cannot assist you in locating this information.
- If you do not know this information (SSID and Network Key), you cannot continue the wireless setup.

  How can I find this information?

  - Check the documentation provided with your wireless access point/router.
  - The initial SSID could be the manufacturer's name or the model name.
  - If you do not know the security information, consult the router manufacturer, your system administrator, or your Internet provider.

2. Press [Settings] > [Network] > [WLAN(Wi-Fi)] > [Find Wi-Fi Network].
3. When [Enable WLAN?] appears, press [Yes].

   The wireless setup wizard starts. To cancel, press [No].
4. The machine searches for your network and displays a list of available SSIDs. When a list of SSIDs appears, press ▲ or ▼ to select the SSID you want. Press [OK].

   If the SSID you want is not displayed, press [Search again] to search your network again.
5. If required, enter the Network Key you wrote down in the first step, and then press [OK].
6. The machine attempts to connect to the wireless device you have selected.

If your wireless device is connected successfully, the LCD displays [Connected].

You have completed the wireless network setup. To install the drivers and software necessary to use your machine, go to your model's **Downloads** page at support.brother.com/downloads.

Related Information

- Use the Wireless Network

Configure Your Machine for a Wireless Network Using the One Push Method of Wi-Fi Protected Setup™ (WPS)

If your wireless access point/router supports WPS (Push Button Configuration), you can use WPS from your machine's control panel to configure your wireless network settings.

1. Press [Settings] > [Network] > [WLAN(Wi-Fi)] > [WPS/Push Button].
2. When [Enable WLAN?] appears, press [Yes].

   The wireless setup wizard starts. To cancel, press [No].
3. When the touchscreen instructs you to start WPS, press the WPS button on your wireless access point/router. Then press [OK] on your machine. Your machine automatically tries to connect to your wireless network.

If your wireless device is connected successfully, the LCD displays [Connected].

You have completed the wireless network setup. To install the drivers and software necessary to use your machine, go to your model's **Downloads** page at support.brother.com/downloads.

Related Information

- Use the Wireless Network

Configure Your Machine for a Wireless Network Using the PIN Method of Wi-Fi Protected Setup™ (WPS)

If your wireless LAN access point/router supports WPS, you can use the Personal Identification Number (PIN) Method to configure your wireless network settings.

The PIN Method is one of the connection methods developed by the Wi-Fi Alliance®. By submitting a PIN created by an Enrollee (your machine) to the Registrar (a device that manages the wireless LAN), you can set up the wireless network and security settings. For more information on how to access WPS mode, see the instructions provided with your wireless access point/router.

Type A

Connection when the wireless LAN access point/router (1) doubles as the Registrar.

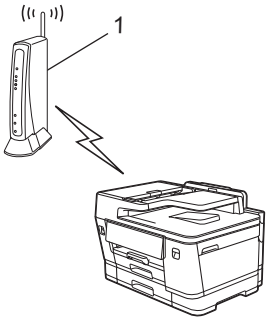

Type B

Connection when another device (2), such as a computer, is used as the Registrar.

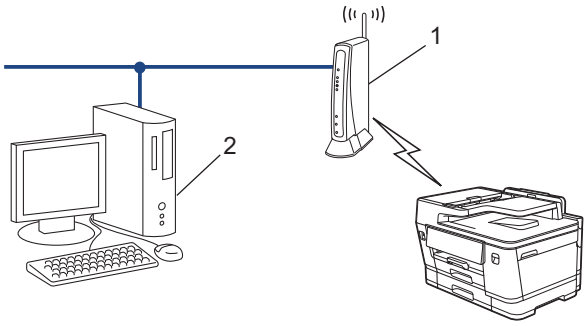

1. Press [Settings] > [Network] > [WLAN(Wi-Fi)] > [WPS/PIN Code].
2. When [Enable WLAN?] appears, press [Yes].

   The wireless setup wizard starts. To cancel, press [No].
3. The LCD displays an eight-digit PIN and the machine starts searching for a wireless LAN access point/router.
4. Using a computer connected to the network, in your browser's address bar, type the IP address of the device you are using as the Registrar (for example: http://192.168.1.2).
5. Go to the WPS settings page and type the PIN, and then follow the on-screen instructions.

- The Registrar is usually the wireless LAN access point/router.
- The settings page may differ depending on the brand of wireless LAN access point/router. For more information, see the instructions supplied with your wireless LAN access point/router.

If your wireless device is connected successfully, the LCD displays [Connected].

If you are using a Windows 10 or Windows 11 computer as a Registrar, complete the following steps:

6. Hold down the ⊞ key and press the R key on the computer's keyboard to launch **Run**.

7. Type **"control printers"** in the **Open:** field and click **OK**.

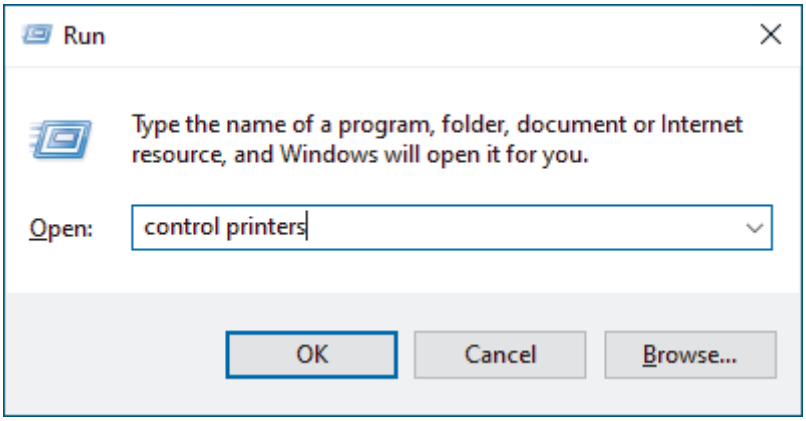

The **Devices and Printers** window appears.

If the **Devices and Printers** window does not appear, click **Devices** > **More devices and printer settings**.

8. Click **Add a device**.

- To use a Windows 10 or Windows 11 computer as a Registrar, you must register it to your network in advance. For more information, see the instructions supplied with your wireless LAN access point/ router.
- If you use Windows 10 or Windows 11 as a Registrar, you can install the printer driver after the wireless configuration by following the on-screen instructions. To install the driver and software necessary to use your machine, go to your model's **Downloads** page at support.brother.com/downloads.

9. Select your machine and click **Next**.
10. Type the PIN displayed on the machine's LCD, and then click **Next**.
11. Click **Close**.

If your wireless device is connected successfully, the LCD displays `[Connected]`.

Related Information

- Use the Wireless Network

Configure Your Machine for a Wireless Network When the SSID is Not Broadcast

Before configuring your machine, we recommend writing down your wireless network settings. You will need this information before you continue with the configuration.

1. Check and write down the current wireless network settings.

Network Name (SSID)

Authentication Method	Encryption Mode	Network Key (Password)
Open System	NONE	-
	WEP [1]	
Shared Key	WEP [1]	
WPA/WPA2-PSK/WPA3-SAE	TKIP (for WPA/WPA2-PSK)	
	AES	
WPA3-SAE	AES	

1 You cannot select the WEP option from the control panel. To select the WEP option for the encryption mode, use Web Based Management.

For example:

Network Name (SSID)
HELLO

Authentication Method	Encryption Mode	Network Key (Password)
WPA3-SAE	AES	12345678

2. Press [Settings] > [Network] > [WLAN(Wi-Fi)] > [Find Wi-Fi Network].
3. When [Enable WLAN?] appears, press [Yes].

   The wireless setup wizard starts. To cancel, press [No].
4. The machine searches for your network and displays a list of available SSIDs. Press ▲ or ▼ to display the [Add SSID] option, and then press it.
5. Press [OK].
6. Enter the SSID name, and then press [OK].
7. Press ▲ or ▼ to select the Authentication Method, and then press it.
8. Follow the instructions on the LCD to configure the settings.
9. The machine attempts to connect to the wireless device you have selected.

If your wireless device is connected successfully, the LCD displays [Connected].

You have completed the wireless network setup. To install the drivers and software necessary to use your machine, go to your model's **Downloads** page at support.brother.com/downloads.

Related Information

- Use the Wireless Network

Related Topics:

- Enter Text on Your Brother Machine

Configure Your Machine for an Enterprise Wireless Network

Before configuring your machine, we recommend writing down your wireless network settings. You will need this information before you continue with the configuration.

1. Check and record the current wireless network settings.

Network Name (SSID)

Authentication Method	Encryption Mode	User ID	Password
EAP-FAST/NONE	AES		
	TKIP		
EAP-FAST/MS-CHAPv2	AES		
	TKIP		
EAP-FAST/GTC	AES		
	TKIP		
PEAP/MS-CHAPv2	AES		
	TKIP		
PEAP/GTC	AES		
	TKIP		
EAP-TTLS/CHAP	AES		
	TKIP		
EAP-TTLS/MS-CHAP	AES		
	TKIP		
EAP-TTLS/MS-CHAPv2	AES		
	TKIP		
EAP-TTLS/PAP	AES		
	TKIP		
EAP-TLS	AES		-
	TKIP		-

For example:

Network Name (SSID)
HELLO

Authentication Method	Encryption Mode	User ID	Password
EAP-FAST/MS-CHAPv2	AES	Brother	12345678

- If you configure your machine using EAP-TLS authentication, you must install the client certificate issued by a CA before you start configuration. Contact your network administrator about the client certificate. If you have installed more than one certificate, we recommend writing down the certificate name you want to use.
- If you verify your machine using the common name of the server certificate, we recommend writing down the common name before you start configuration. Contact your network administrator about the common name of the server certificate.

2. Press [Settings] > [Network] > [WLAN(Wi-Fi)] > [Find Wi-Fi Network].
3. When [Enable WLAN?] appears, press [Yes].

   The wireless setup wizard starts. To cancel, press [No].
4. The machine searches for your network and displays a list of available SSIDs. Press ▲ or ▼ to display the [Add SSID] option, and then press it.
5. Press [OK].
6. Enter the SSID name, and then press [OK].
7. Press ▲ or ▼ to select the Authentication Method, and then press it.
8. Follow the instructions on the LCD to configure the settings.
9. The machine attempts to connect to the wireless device you have selected.

If your wireless device is connected successfully, the LCD displays [Connected].

You have completed the wireless network setup. To install the drivers and software necessary to use your machine, go to your model's **Downloads** page at support.brother.com/downloads.

Related Information

- Use the Wireless Network

Related Topics:

- Enter Text on Your Brother Machine

Use Wi-Fi Direct®

- Wi-Fi Direct Overview
- Configure Your Wi-Fi Direct Network Using the Push Button Method
- Configure a Wi-Fi Direct Network Manually

Wi-Fi Direct Overview

Wi-Fi Direct is one of the wireless configuration methods developed by the Wi-Fi Alliance®. It allows you to securely connect your mobile device to your Brother machine without using a wireless router/access point.

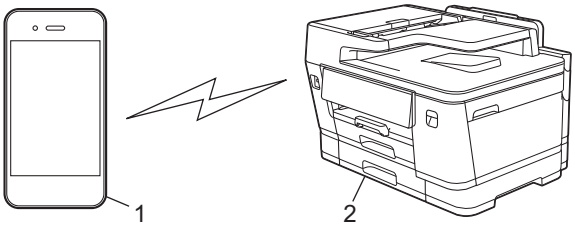

1. Mobile device
2. Your Brother machine

- You can use Wi-Fi Direct with either the wired or wireless network connection at the same time.
- The Wi-Fi Direct supported device can become a Group Owner. When configuring the Wi-Fi Direct network, the Group Owner serves as an access point.

Related Information

- Use Wi-Fi Direct®

Related Topics:

- Configure Your Wi-Fi Direct Network Using the Push Button Method
- Configure a Wi-Fi Direct Network Manually

Configure Your Wi-Fi Direct Network Using the Push Button Method

To use the Wi-Fi Direct network settings when using an Android™ device, install Brother Mobile Connect, select Wi-Fi Direct as the method for connecting to this product, and follow the on-screen directions.

When the machine receives the Wi-Fi Direct request from your mobile device, the message `[Wi-Fi Direct connection request received. Press [OK] to connect.]` will appear on the LCD. Press `[OK]` to connect.

1. Press [Settings] > [Network] > [Wi-Fi Direct].
2. If your mobile device does not support Wi-Fi Direct, press [Group Owner] > [On].

Depending on the device, if you connect with `[Group Owner]` set to `[On]`, your mobile device may disconnect from the connected wireless network and automatically switch to mobile data. If necessary, reconnect to the original wireless network after use. If your device continues to automatically switch to the Wi-Fi Direct network, turn off the automatic connection setting to this machine on your mobile device.

3. Press [Push Button].
4. When the `[Activate Wi-Fi Direct on other device. Then Press [OK].]` message appears, turn your mobile device's Wi-Fi Direct function on (for more information, see your mobile device's user's guide). Press `[OK]` on your Brother machine.
5. Do one of the following:
   - If your mobile device displays a list of machines with Wi-Fi Direct enabled, select your Brother machine.
   - If your Brother machine displays a list of mobile devices with Wi-Fi Direct enabled, select your mobile device. To search for available devices again, press [Rescan].

When your mobile device connects successfully, the machine displays `[Connected]`.

Related Information

- Use Wi-Fi Direct®

Related Topics:

- Wi-Fi Direct Overview
- Configure a Wi-Fi Direct Network Manually
- Brother Mobile Connect

Configure a Wi-Fi Direct Network Manually

Configure the Wi-Fi Direct setting from the machine's control panel.

Depending on the device, if you connect to the Wi-Fi Direct network manually, your mobile device may disconnect from the connected wireless network and automatically switch to mobile data. If necessary, reconnect to the original wireless network after use. If your device continues to automatically switch to the Wi-Fi Direct network, turn off the automatic connection setting to this machine on your mobile device.

1. Press [Settings] > [Network] > [Wi-Fi Direct] > [Manual].
2. The machine displays the SSID (Network Name) and Password (Network Key). Go to your mobile device's wireless network settings screen, and enter the SSID and password.

- You can also configure a Wi-Fi Direct network using the QR Code displayed on the LCD. Scan the QR Code, and then follow the LCD instructions.
- If the QR Code cannot be read, manually enter the Network Name (SSID) and Network Key (Password) to connect.

When your mobile device connects successfully, the machine displays [Connected].

Related Information

- Use Wi-Fi Direct®

Related Topics:

- Wi-Fi Direct Overview
- Configure Your Wi-Fi Direct Network Using the Push Button Method

Enable/Disable Wireless LAN

1. Press [Settings] > [Network] > [WLAN(Wi-Fi)] > [WLAN Enable].
2. Do one of the following:
   - To enable Wi-Fi, select [On].
   - To disable Wi-Fi, select [Off].
3. Press .

Related Information

- Wireless Network Settings

Print the WLAN Report

The WLAN Report shows your machine's wireless status. If the wireless connection fails, check the error code on the printed report.

1. Press [Settings] > [All Settings] > [Print Reports] > [WLAN Report] > [Yes].

   The machine will print the WLAN Report.

If the WLAN Report does not print, check your machine for errors. If there are no visible errors, wait for one minute and then try to print the report again.

Related Information

- Wireless Network Settings
  - Wireless LAN Report Error Codes

Wireless LAN Report Error Codes

If the Wireless LAN Report shows that the connection failed, check the error code on the printed report and see the corresponding instructions in the table:

Error Code	Problem and Recommended Solutions
TS-01	The WLAN (Wi-Fi) is not enabled. Check the following points and try to set up your wireless connection again: • Enable the WLAN setting on your machine. • If a network cable is connected to your machine, disconnect it.
TS-02	The wireless router/access point cannot be detected. Check the following points and try to set up your wireless connection again: • Make sure the wireless router/access point is on. • Temporarily place your machine closer to the wireless router/access point when you are configuring the wireless settings. • If your wireless router/access point is using MAC address filtering, confirm that the MAC address of the machine is allowed in the filter. You can find the MAC address by printing the Network Configuration Report. • If you manually entered the Network Name (SSID) and security information (authentication method/encryption method), the information may be incorrect. Check the Network Name and security information again and re-enter the correct information. • Restart your wireless router/access point. If you cannot find the Network Name (SSID) and security information, see the documentation provided with your wireless router/access point, or contact the router manufacturer, your system administrator, or Internet service provider.
TS-03	The wireless enterprise network and security settings you entered may be incorrect. Check the following points and try to set up your wireless connection again: Verify the following information: - Network Name (SSID) you selected to configure your machine. - Security information you selected to configure your machine (such as the authentication method, encryption method, or User ID). If you still cannot find the Network Name (SSID) and security information, see the documentation provided with your wireless router/access point, or contact the router manufacturer, your system administrator, or Internet service provider.
TS-04	Your machine does not support the authentication and encryption methods used by the selected wireless router/access point. For infrastructure mode (Most common) Change the authentication and encryption methods of the wireless router/access point. Your machine supports the following authentication and encryption methods: • WPA-Personal: TKIP / AES • WPA2-Personal: TKIP / AES • WPA3-Personal: AES • OPEN: WEP / NONE (without encryption) • Shared key: WEP If your issue is not resolved, the Network Name (SSID) or security settings you entered may be incorrect. Check that all wireless network settings are correct for your network.

Error Code	Problem and Recommended Solutions
TS-05	The Network Name (SSID) and Network Key (Password) are incorrect. Check the following points and try to set up your wireless connection again: • Confirm the Network Name (SSID) and Network Key (Password). • If your Network Key contains upper-case and lower-case letters, make sure you type them correctly. • If you cannot find the Network Name (SSID) and security information, see the documentation provided with your wireless router/access point, or contact the router manufacturer, your system administrator, or Internet service provider. • If your wireless router/access point uses WEP encryption with multiple WEP keys, write down and use only the first WEP key.
TS-06	The wireless security information (authentication method/encryption method/Network Key (Password)) is incorrect. Check the following points and try to set up your wireless connection again: • Confirm the Network Key. If your Network Key contains upper-case and lower-case letters, make sure you type them correctly. • Confirm whether the authentication method entered and the authentication method or encryption method supported by the wireless router/access point are the same. • If the Network key, authentication method, and encryption method have been confirmed, restart your wireless router/access point and the machine. • If your wireless router/access point's Stealth Mode is on, you may need to disable it to connect to the wireless network. If you cannot find the Network Name (SSID) and security information, see the documentation provided with your wireless router/access point, or contact the router manufacturer, your system administrator, or Internet service provider.
TS-07	The machine cannot detect a wireless router/access point that has WPS (Wi-Fi Protected Setup) enabled. Check the following points and try again: • To check if your wireless router/access point supports WPS, look for the WPS symbol displayed on the router/access point. For more information, see the documentation provided with your wireless router/access point. • To set up your wireless connection using WPS, you must configure both your machine and the wireless router/access point. For more information, see the user's guide. • If you do not know how to set up your wireless router/access point using WPS, see the documentation provided with your wireless router/access point, or contact the router manufacturer, your system administrator, or Internet service provider.
TS-08	Two or more wireless routers or access points that have WPS enabled are detected. Check the following points and try again: • Make sure that only one wireless router/access point within range has WPS enabled, and then try to connect again. • Try to connect again after a few minutes to avoid interference from other access points/ routers.

How to confirm wireless security information (SSID/authentication method/encryption method/Network Key) of your WLAN access point/router:

1. The default security settings may be provided on a label attached to the WLAN access point/router. Or the manufacturer's name or model number of the WLAN access point/router may be used as the default security settings.
2. See the documentation provided with your WLAN access point/router for information on how to find the security settings.

- If the WLAN access point/router is set to not broadcast the SSID, the SSID will not automatically be detected. You will have to manually enter the SSID name.
- The Network Key may also be described as the Password, Security Key, or Encryption Key.

If you do not know the SSID and wireless security settings of your WLAN access point/router or how to change the configuration, see the documentation provided with your WLAN access point/router, ask the manufacturer of your access point/router or ask your Internet provider or network administrator.

Related Information

- Print the WLAN Report

Network Features

- Print the Network Configuration Report
- Configure the Proxy Server Settings Using Web Based Management
- Configure and Operate LDAP Search
- Synchronise Time with the SNTP Server Using Web Based Management
- Forward Incoming Faxes to a Network Destination
- Gigabit Ethernet (Wired Network Only)
- Use Global Network Detection Features
- Reset the Network Settings to Factory Default

Print the Network Configuration Report

The Network Configuration Report lists the network configuration, including the network print server settings.

- The Node Name appears on the Network Configuration Report. The default Node Name is "BRN123456abcdef" for a wired network or "BRW123456abcdef" for a wireless network (where "123456abcdef" is your machine's MAC Address / Ethernet Address.)
- If the IP Address on the Network Configuration Report shows 0.0.0.0, wait for one minute and try printing it again.
- You can find your machine's settings, such as the IP address, subnet mask, node name, and MAC Address on the report, for example:
  - IP address: 192.168.0.5
  - Subnet mask: 255.255.255.0
  - Node name: BRN000ca0000499
  - MAC Address: 00-0c-a0-00-04-99

1. Press [Settings] > [All Settings] > [Print Reports] > [Network Configuration] > [Yes].

   The machine prints the current Network Configuration Report.

Related Information

- Network Features

Related Topics:

- Configure the Proxy Server Settings Using Web Based Management

Configure the Proxy Server Settings Using Web Based Management

If your network uses a proxy server, the following proxy server information must be configured using Web Based Management:

- Proxy server address
- Port number
- User Name
- Password

1. Start Web Based Management. See Access Web Based Management.
2. In the left navigation bar, click **Network** > **Network** > **Protocol**.

If the left navigation bar is not visible, start navigating from ≡.

3. Make sure the **Proxy** checkbox is selected, and then click **Submit**.
4. In the **Proxy** field, click **Advanced Settings**.
5. Enter the proxy server information.
6. Click **Submit**.

Related Information

- Network Features

Related Topics:

- Configure the Proxy Server Settings Using the Machine's Control Panel
- Access Web Based Management

Configure and Operate LDAP Search

The LDAP feature allows you to search for information, such as fax numbers and email addresses, on your server. When you use the Fax, I-Fax, or Scan to Email server feature, you can use the LDAP search to find fax numbers or email addresses.

- The LDAP feature does not support simplified Chinese, traditional Chinese, or Korean.
- The LDAP feature supports LDAPv3.
- You must use Simple Authentication to communicate with your LDAP server.

Related Information

- Network Features
  - Change LDAP Configuration Using Web Based Management
  - Perform an LDAP Search Using Your Machine's Control Panel

Related Topics:

- Configure the SNTP Protocol Using Web Based Management

Change LDAP Configuration Using Web Based Management

Use Web Based Management to configure your LDAP settings in a web browser.

1. Start Web Based Management. See Access Web Based Management.
2. In the left navigation bar, click **Network** > **Network** > **Protocol**.

   If the left navigation bar is not visible, start navigating from ≡.

3. Select the **LDAP** checkbox, and then click **Submit**.
4. Restart your Brother machine to activate the configuration.
5. On your computer, in Web Based Management, click **Address Book** > **LDAP** in the left navigation bar.
   - **LDAP Search**
   - **LDAP Server Address**
   - **SSL/TLS**
   - **Port**
   - **Authentication**
   - **Username**

     This selection will be available depending on the authentication method used.
   - **Password**

     This selection will be available depending on the authentication method used.

   - If the LDAP server supports Kerberos authentication, we recommend selecting Kerberos for the Authentication settings. It provides strong authentication between the LDAP server and your machine.
   - You must configure the SNTP protocol (network time server), or you must set the date, time and time zone correctly on the control panel for Kerberos authentication.

   - **Kerberos Server Address**

     This selection will be available depending on the authentication method used.
   - **Search Root**
   - **Timeout for LDAP**
   - **Attribute of Name (Search Key)**
   - **Attribute of E-mail**
   - **Attribute of Fax Number**
6. When finished, click **Submit**. Make sure the **Status** field reads **OK**.

Related Information

- Configure and Operate LDAP Search

Related Topics:

- Access Web Based Management
- Synchronise Time with the SNTP Server Using Web Based Management

Perform an LDAP Search Using Your Machine's Control Panel

When you have configured LDAP settings, you can use the LDAP search feature to find fax numbers or email addresses to use for:

- Sending a Fax
- Sending an Internet Fax (I-Fax)
- Scanning to Email Server

- The LDAP feature supports LDAPv3.
- You may need to use Kerberos Authentication or Simple Authentication to connect to your LDAP server, depending on the security policy set by your network administrator.
- You must configure the SNTP protocol (network time server), or you must set the date, time and time zone correctly on the control panel for Kerberos authentication.

1. Press to search.
2. Enter the initial characters for your search using the LCD.
3. Press [OK].

   The LDAP search result will be shown on the LCD; the icon appears before the local address book search results.

   If there is no match on the server or the local address book, the LCD will show [Results cannot be found.] for about 60 seconds.
4. Press ▲ or ▼ to display the name you want.
5. Press the name.

   To view the details of the name, press [Detail].
6. If the result includes more than one fax number or email address, the machine will prompt you to select just one. Press [Apply]. Do one of the following:
   - If you are sending a fax and an I-Fax, press [Fax Start].
   - If you are scanning to the email Server, load your document, press [Next], and then press [Start].

Related Information

- Configure and Operate LDAP Search

Related Topics:

- Enter Text on Your Brother Machine
- Synchronise Time with the SNTP Server Using Web Based Management

Synchronise Time with the SNTP Server Using Web Based Management

The Simple Network Time Protocol (SNTP) is used to synchronise the time used by the machine for authentication with the SNTP time server. (This is not the time displayed on the machine's LCD.) You can automatically or manually synchronise the machine's time with the Coordinated Universal Time (UTC) provided by the SNTP time server.

- Configure Date and Time Using Web Based Management
- Configure the SNTP Protocol Using Web Based Management

Configure Date and Time Using Web Based Management

Configure the date and time to synchronise the time used by the machine with the SNTP time server.

This feature is not available in some countries.

1. Start Web Based Management. See Access Web Based Management.
2. In the left navigation bar, click **Administrator** > **Date&Time**.

If the left navigation bar is not visible, start navigating from ≡.

3. Verify the **Time Zone** settings.

Select the time difference between your location and UTC from the **Time Zone** drop-down list. For example, the time zone for Eastern Time in the USA and Canada is UTC-05:00.

4. Select the **Synchronize with SNTP server** checkbox.
5. Click **Submit**.

You can also configure date and time manually.

Related Information

- Synchronise Time with the SNTP Server Using Web Based Management

Related Topics:

- Set up a Scan to Network Profile
- Access Web Based Management

Configure the SNTP Protocol Using Web Based Management

Configure the SNTP protocol to synchronise the time the machine uses for authentication with the time kept by the SNTP time server.

1. Start Web Based Management. See Access Web Based Management.
2. In the left navigation bar, click **Network** > **Network** > **Protocol**.

If the left navigation bar is not visible, start navigating from ≡.

3. Select the **SNTP** checkbox to activate the settings.
4. Click **Submit**.
5. Restart your Brother machine to activate the configuration.
6. Next to the SNTP checkbox, click **Advanced Settings**.
7. Configure the settings.

Option	Description
Status	Displays whether the SNTP protocol is enabled or disabled.
Synchronization Status	Confirm the latest synchronisation status.
SNTP Server Method	Select **AUTO** or **STATIC**. • **AUTO** If you have a DHCP server on your network, the SNTP server will obtain the address from that server automatically. • **STATIC** Type the address you want to use.
Primary SNTP Server Address **Secondary SNTP Server Address**	Type the server's address (up to 64 characters). The secondary SNTP server's address is used as a backup to the primary SNTP server's address. If the primary server is unavailable, the machine will contact the secondary SNTP server.
Primary SNTP Server Port **Secondary SNTP Server Port**	Type the port number (1-65535). The secondary SNTP server port is used as a backup to the primary SNTP server port. If the primary port is unavailable, the machine will contact the secondary SNTP port.
Synchronization Interval	Type the number of hours between server synchronisation attempts (1-168 hours).

8. Click **Submit**.

Related Information

- Synchronise Time with the SNTP Server Using Web Based Management

Related Topics:

- Access Web Based Management

Forward Incoming Faxes to a Network Destination

Set up a profile to forward incoming faxes directly to a folder on your server.

1. Start Web Based Management. See Access Web Based Management.
2. In the left navigation bar, click **Administrator** > **Network Profile**.

If the left navigation bar is not visible, start navigating from ≡.

3. Click the protocol option next to the Profile number.
4. Select your server type in the **Protocol** field, and then click **Submit**.
5. Set up the profile for your server, using one of the following tables:

Using the following characters: ?, /, \, ", :, <, >, | or * may cause a sending error.

FTP

Option	Description
Profile Name	Type a name for this server profile (up to 15 alphanumeric characters). The machine will display this name on the LCD.
Host Address	Type the Host Address (for example: ftp.example.com; up to 64 characters) or the IP address (for example: 192.23.56.189).
Port Number	Change the **Port Number** setting used to access the FTP server. The default setting is port 21. In most cases, this setting does not need to be changed.
Username	Type a user name (up to 32 characters) of a user that has permission to write data to the FTP server.
Password	Type the password (up to 32 characters) associated with the user name you entered in the **Username** field. Type the password again in the **Retype password** field.
SSL/TLS	Set the **SSL/TLS** option to forward incoming faxes securely using SSL/TLS communication. Change the **CA Certificate** setting, if needed.
Store Directory	Type the path to the folder on the FTP server where you want to forward incoming faxes. Do not type a slash mark at the beginning of the path.
Passive Mode	Set the **Passive Mode** option to off or on depending on your FTP server and network firewall configuration. The default setting is on. In most cases, this setting does not need to be changed.

SFTP (MFC-J6975DW/MFC-J6977DW)

Option	Description
Profile Name	Type a name for this server profile (up to 15 alphanumeric characters). The machine will display this name on the LCD.
Host Address	Type the Host Address (for example: ftp.example.com; up to 64 characters) or the IP address (for example: 192.23.56.189).
Username	Type a user name (up to 32 characters) of a user that has permission to write data to the SFTP server.
Auth. Method	Select **Password** or **Public Key**.
Password	When you select **Password** for the **Auth. Method** option, type the password (up to 32 characters) associated with the user name you typed in the **Username** field. Type the password again in the **Retype password** field.

Option	Description
Client Key Pair	When you select **Public Key** for the **Auth. Method** option, select the authentication type.
Server Public Key	Select the authentication type.
Store Directory	Type the path to the folder on the SFTP server where you want to forward incoming faxes. Do not type a slash mark at the beginning of the path.
Port Number	Change the **Port Number** setting used to access the SFTP server. The default setting is port 22. In most cases, this setting does not need to be changed.

Network

Option	Description
Profile Name	Type a name for this server profile (up to 15 alphanumeric characters). The machine will display this name on the LCD.
Network Folder Path	Type the path to the folder on the CIFS server where you want to forward incoming faxes.
Auth. Method	To set your authentication method, select **Auto**, **Kerberos**, or **NTLMv2**.
Username	Type a user name (up to 96 characters) that has permission to write data to the folder specified in the **Network Folder Path** field. If the user name is part of a domain, type the user name in one of the following styles: **user@domain** **domain\user**
Password	Type the password (up to 32 characters) associated with the user name you entered in the **Username** field. Type the password again in the **Retype password** field.
Kerberos Server Address	When you select **Kerberos** for the **Auth. Method** option, you must type the Kerberos Server Address (for example: kerberos.example.com; up to 64 characters).

You must configure the SNTP (network time server) or you must set the date, time and time zone correctly on the control panel. The time must match the time used by the Kerberos Server and CIFS Server.

SharePoint (MFC-J6975DW/MFC-J6977DW)

Option	Description
Profile Name	Type a name for this server profile (up to 15 alphanumeric characters). The machine will display this name on the LCD.
SharePoint Site Address	Copy and paste the full destination address shown in the address bar of your browser (for example: http://SharePointSiteAddress/Shared %20Documents/Forms/AllItems.aspx) or the IP address (for example: http://192.168.0.1/Shared%20Documents/Forms/AllItems.aspx).
SSL/TLS	If the address in the **SharePoint Site Address** field starts with "https://", you can verify the server certificate by selecting the **Verify Server Certificate** checkbox.
Auth. Method	To set your authentication method, select **Auto**, **NTLMv2**, **Kerberos**, or **Basic**. If you choose **Auto**, the authentication method will be detected automatically.
Username	Type the user name (up to 96 characters) of a user that has permission to write data to the folder specified in the **SharePoint Site Address** field. If the user name is part of a domain, enter the user name in one of the following styles:

Option	Description
	• **user@domain** • **domain\user**
Password	Type the password (up to 32 characters) associated with the user name you entered in the **Username** field. Type the password again in the **Retype password** field.
Kerberos Server Address	When you select **Kerberos** for the **Auth. Method** option, you must type the Kerberos Server Address (for example: kerberos.example.com; up to 64 characters).

6. Click **Submit**.
7. To set the Fax Forward feature, in the left navigation bar, click **Fax** > **Remote Fax Options**.
8. Select **Forward to Network** from the **Fwd/Store/Cloud/Network** drop-down list.
9. Select the file type you want to use.
10. To print a backup copy of incoming faxes, select **On** for **Backup print**.
11. Select the profile you want to use from the **Network Profile** drop-down list.
12. Type a three-digit Remote Access Code in the **Remote Access Code** field, if needed.

- You can use the numbers 0 through 9, *, or # for the Remote Access Code.
- The Remote Access Code must be different from the remote codes for the Fax features.

13. Click **Submit**.

Related Information

- Network Features

Related Topics:

- Access Web Based Management
- Memory Receive Options

Gigabit Ethernet (Wired Network Only)

Your machine supports 1000BASE-T Gigabit Ethernet. To connect to a 1000BASE-T Gigabit Ethernet Network, you must set the machine's Ethernet link mode to Auto from the machine's control panel or Web Based Management (web browser).

Use a Category 5e (or greater) network cable. The machine can automatically negotiate the highest supported network speed, for example: to achieve 1000BASE-T network speeds, all connecting infrastructure, including network switches and cables must also support 1000BASE-T speeds. Otherwise the machine will communicate at either 10BASE-T or 100BASE-TX.

Related Information

- Network Features

Use Global Network Detection Features

When you use your machine on a private network, use the Global Network Detection feature to avoid a risk from unexpected attacks from the global network.

- Enable/Disable Global IP Address Detection
- Block Communications from the Global Network

Enable/Disable Global IP Address Detection

Use this feature to check your machine's IP address. When your machine is assigned to a global IP address, an alert is displayed on the machine.

1. Press [Settings] > [All Settings] > [Network] > [Global Detect] > [Allow Detect] > [On].
2. Press .

Related Information

- Use Global Network Detection Features

Block Communications from the Global Network

When you enable this feature, it limits receiving jobs from devices with global IP addresses.

1. Press [Settings] > [All Settings] > [Network] > [Global Detect] > [Reject Access] > [On].
2. Press .

Related Information

- Use Global Network Detection Features

Reset the Network Settings to Factory Default

You can use your machine's control panel to reset the machine's network settings to its default factory settings. This resets all information except the administrator password.

- This feature restores all network settings, except the administrator password, to the factory settings. To reset the administrator password, use the [All Settings] reset option.
- You can also reset the print server to its factory settings using Web Based Management.

1. Press [Settings] > [All Settings] > [Network] > [Network Reset].
2. Press [Next].
3. The reset confirmation message is displayed. Press [OK] for two seconds.

   The machine will restart.

Related Information

- Network Features

Related Topics:

- Check Your Machine's Password
- Reset Functions Overview

Brother Management Tools

Use one of Brother's management tools to configure your Brother machine's network settings.

Go to your model's **Downloads** page at support.brother.com/downloads to download the tools.

Related Information

- Network

Security

Your machine supports the security features listed below. For more information about each security feature, go to your model's *Security Features Guide* at support.brother.com/g/s/id/htmldoc/common/sfg/eng/index.html.

- Network Security > Configure Certificates for Device Security
- Network Security > Use SSL/TLS
- Network Security > Use SNMPv3
- Network Security > Use IPsec
- Network Security > Use IEEE 802.1x Authentication for Your Network
- User Authentication > Use Active Directory Authentication （MFC-J6975DW/MFC-J6977DW）
- User Authentication > Use LDAP Authentication （MFC-J6975DW/MFC-J6977DW）
- User Authentication > Use Secure Function Lock 3.0
- Send or Receive an Email Securely

Mobile/Web Connect

- AirPrint
- Mopria™ Print Service and Mopria™ Scan
- Brother Mobile Connect
- Brother Web Connect

AirPrint

- AirPrint Overview
- Before Using AirPrint (macOS)
- Print Using AirPrint
- Scan Using AirPrint (macOS)
- Send a Fax Using AirPrint (macOS)

AirPrint Overview

AirPrint is a printing solution for Apple operating systems that allows you to wirelessly print photos, email, web pages, and documents from your iPad, iPhone, iPod touch, and Mac computer without the need to install a driver.

AirPrint also allows you to send faxes directly from your Mac computer without having to print them and allows you to scan documents to your Mac computer.

For more information, visit Apple's website.

Use of the Works with Apple badge means that an accessory has been designed to work specifically with the technology identified in the badge and has been certified by the developer to meet Apple performance standards.

Related Information

- AirPrint

Before Using AirPrint (macOS)

Before printing using macOS, add your machine to the printer list on your Mac computer.

1. Select **System Settings** from the Apple menu.
2. Select **Printers & Scanners**.
3. Click **Add Printer, Scanner, or Fax…**.
   The **Add Printer** screen appears.
4. Select your machine, and then select your model's name from the **Use** pop-up menu.
5. Click **Add**.

Related Information

- AirPrint

Print Using AirPrint

- Print from iPad, iPhone, or iPod touch
- Print Using AirPrint (macOS)

Print from iPad, iPhone, or iPod touch

The procedure used to print may vary by application. Safari is used in the example below.

1. Make sure your machine is turned on.
2. Load the paper in the paper tray and change the paper tray settings on your machine.
3. Use Safari to open the page that you want to print.
4. Tap or .
5. Tap **Print**.
6. Make sure your machine is selected.
7. If a different machine (or no machine) is selected, tap **Printer**.

   A list of available machines appears.
8. Tap your machine's name in the list.
9. Select the options you want, such as the number of pages to print and 2-sided printing (if supported by your machine).
10. Tap **Print**.

Related Information

- Print Using AirPrint

Print Using AirPrint (macOS)

The procedure used to print may vary by application. Safari is used in the example below. Before printing, make sure your machine is in the printer list on your Mac computer.

1. Make sure your machine is turned on.
2. Load the paper in the paper tray and change the paper tray settings on your machine.
3. On your Mac computer, use Safari to open the page that you want to print.
4. Click the **File** menu, and then select **Print**.
5. Make sure your machine is selected. If a different machine (or no machine) is selected, click the **Printer** pop-up menu, and then select your machine.
6. Select the desired options, such as the number of pages to print and 2-sided printing (if supported by your machine).
7. Click **Print**.

Related Information

- Print Using AirPrint

Related Topics:

- Before Using AirPrint (macOS)

Scan Using AirPrint (macOS)

Before scanning, make sure your machine is in the scanner list on your Mac computer.

1. Load your document.
2. Select **System Settings** from the Apple menu.
3. Select **Printers & Scanners**.
4. Select your machine from the scanner list.
5. Click the **Open Scanner…** button.

   The Scanner screen appears.
6. If you place the document in the ADF, select **Use Document Feeder** checkbox, and then select the size of your document from the scan size setting pop-up menu.
7. Select the destination folder or destination application from the destination setting pop-up menu.
8. Click **Show Details** to change the scanning settings if needed.

   You can crop the image manually by dragging the mouse pointer over the portion you want to scan when scanning from the scanner glass.
9. Click **Scan**.

Related Information

- AirPrint

Related Topics:

- Before Using AirPrint (macOS)

Send a Fax Using AirPrint (macOS)

Make sure your machine is in the printer list on your Mac computer. Apple TextEdit is used in the example below.

- AirPrint supports only monochrome fax documents.
- Your machine supports the Secure Function Lock feature. Sending faxes via AirPrint is not available if Fax Tx for each user is restricted.

1. Make sure your machine is turned on.
2. On your Mac computer, open the file that you want to send as a fax.
3. Click the **File** menu, and then select **Print**.
4. Click the **Printer** pop-up menu, and then select your model with **Fax** in the name.
5. Type the fax recipient information.
6. Click **Fax**.

Related Information

- AirPrint

Related Topics:

- Before Using AirPrint (macOS)

Mopria™ Print Service and Mopria™ Scan

Mopria™ Print Service is a print feature and Mopria™ Scan is a scan feature on Android™ mobile devices developed by the Mopria Alliance™. With this service, you can connect to the same network as your machine to print and scan without additional setup.

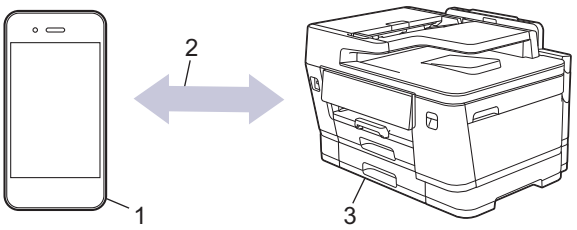

1. Android™ Mobile Device
2. Wi-Fi® Connection
3. Your Machine

You must download the Mopria™ Print Service or Mopria™ Scan from Google Play™ and install it on your Android™ device. Before using these Mopria™ features, make sure you enable them on your mobile device.

For more information on Mopria™ Print Service and Mopria™ Scan, visit https://www.mopria.org.

Related Information

- Mobile/Web Connect

Brother Mobile Connect

Use Brother Mobile Connect to print and scan from your mobile device.

- For Android™ devices:

  Brother Mobile Connect allows you to use your Brother machine's features directly from your Android™ device.

  Download and install Brother Mobile Connect from Google Play™.
- For all iOS or iPadOS supported devices including iPhone, iPad, and iPod touch:

  Brother Mobile Connect allows you to use your Brother machine's features directly from your iOS or iPadOS device.

  Download and install Brother Mobile Connect from the App Store.

Related Information

- Mobile/Web Connect

Brother Web Connect

- Brother Web Connect Overview
- Online Services Used with Brother Web Connect
- Set Up Brother Web Connect
- Scan and Upload Documents Using Brother Web Connect
- Upload a Document from an External Memory Device Using Brother Web Connect
- Download and Print Documents Using Brother Web Connect
- Download and Save a Document to an External Memory Device Using Brother Web Connect
- FaxForward to Cloud or E-mail

Brother Web Connect Overview

Certain websites provide services that allow users to upload and view images and files on the website. Your Brother machine can scan images and upload them to these services, and also download from and print images that are already uploaded to these services.

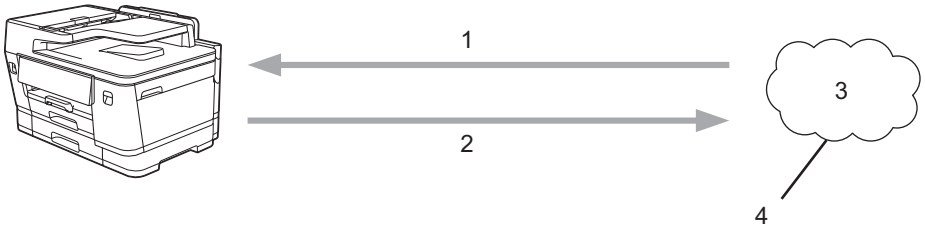

1. Printing
2. Scanning
3. Photos, images, documents and other files
4. Web Service

To use Brother Web Connect, your Brother machine must be connected to a network that has access to the Internet, through either a wired or wireless connection.

For network setups that use a proxy server, the machine must also be configured to use a proxy server. If you are unsure of your network configuration, check with your network administrator.

A proxy server is a computer that serves as an intermediary between computers without a direct Internet connection, and the Internet.

Related Information

- Brother Web Connect
  - Configure the Proxy Server Settings Using the Machine's Control Panel

Related Topics:

- Configure the Proxy Server Settings Using Web Based Management

Configure the Proxy Server Settings Using the Machine's Control Panel

If your network uses a proxy server, the following proxy server information must be configured on the machine:

- Proxy server address
- Port number
- User Name
- Password

1. Press [Settings] > [All Settings] > [Network] > [Web Connect Settings] > [Proxy Settings] > [Proxy Connection].
2. Press [On].
3. Press the option that you want to set, and then enter the proxy server information.
   Press [OK].
4. Press .

Related Information

- Brother Web Connect Overview

Related Topics:

- Configure the Proxy Server Settings Using Web Based Management

Online Services Used with Brother Web Connect

Use Brother Web Connect to access online services from your Brother machine.

To use Brother Web Connect, you must have an account with the online service you want to use.

- Google Drive™
- Evernote®
- Dropbox
- OneDrive
- Box
- OneNote
- SharePoint Online

For more information about any of these services, refer to the respective service's website.

The following table describes which file types can be used with each Brother Web Connect feature:

Accessible Services	Google Drive™ Evernote® Dropbox OneDrive Box SharePoint Online	OneNote
Upload scanned images	JPEG PDF DOCX XLSX PPTX TIFF	JPEG PDF DOCX XLSX PPTX TIFF
Upload images saved on media	JPG	-
Download and print images	JPEG PDF DOCX XLSX PPTX	JPEG PDF DOCX XLSX PPTX
Download and save images to media	JPEG PDF DOCX XLSX PPTX	JPEG PDF DOCX XLSX PPTX
FaxForward to the online services	JPEG PDF TIFF	JPEG PDF TIFF

- Not all services are available in all countries.
- For Hong Kong, Taiwan and Korea:

  Brother Web Connect supports only file names written in English. Files named in the local language will not be downloaded.

Related Information

- Brother Web Connect

Set Up Brother Web Connect

- Brother Web Connect Setup Overview
- Apply for Brother Web Connect Access
- Register an Account on Your Brother Machine for Brother Web Connect

Brother Web Connect Setup Overview

Configure the Brother Web Connect settings using the following procedure:

Step 1: Create an account with the service you want to use.

Access the service's website using a computer and create an account. (If you already have an account, there is no need to create an additional account.)

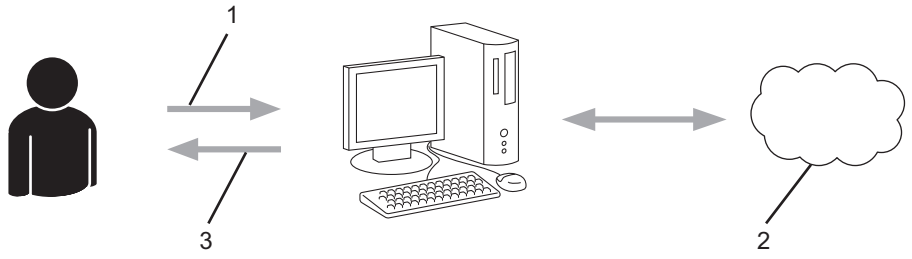

1. User registration
2. Web Service
3. Obtain account

Step 2: Apply for Brother Web Connect access.

Start Brother Web Connect access using a computer and obtain a temporary ID.

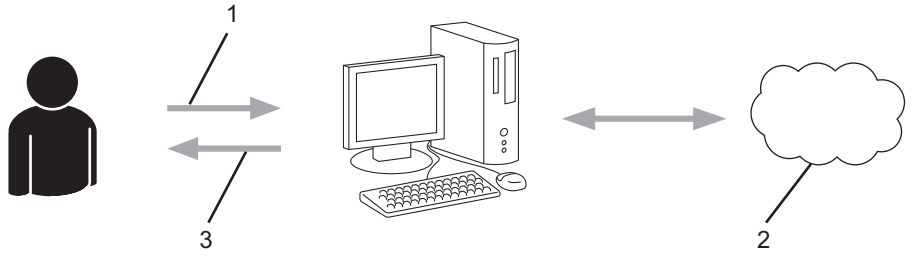

1. Enter account information
2. Brother Web Connect application page
3. Obtain temporary ID

Step 3: Register your account information on your machine so you can access the service you want to use.

Enter the temporary ID to enable the service on your machine. Specify the account name as you would like it to be displayed on the machine, and enter a PIN if you would like to use one.

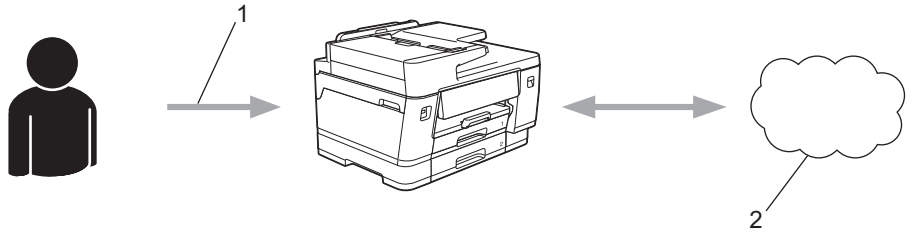

1. Enter temporary ID
2. Web Service

Your Brother machine can now use the service.

Related Information

- Set Up Brother Web Connect

Apply for Brother Web Connect Access

To use Brother Web Connect to access online services, you must first apply for Brother Web Connect access using a computer that has the Brother Software installed.

1. Access the Brother Web Connect application website:

Option	Description
Windows	Launch (**Brother Utilities**), and then click the drop-down list and select your model name (if not already selected). Click **Do More** in the left navigation bar, and then click **Brother Web Connect**. You can also access the website directly: Type bwc.brother.com into your web browser's address bar.
Mac	Type bwc.brother.com into your web browser's address bar.

The Brother Web Connect page launches.

2. Select the service you want to use.
3. Follow the on-screen instructions and apply for access.

When using SharePoint Online, follow the on-screen instructions to register a document library.

When finished, your temporary ID appears.

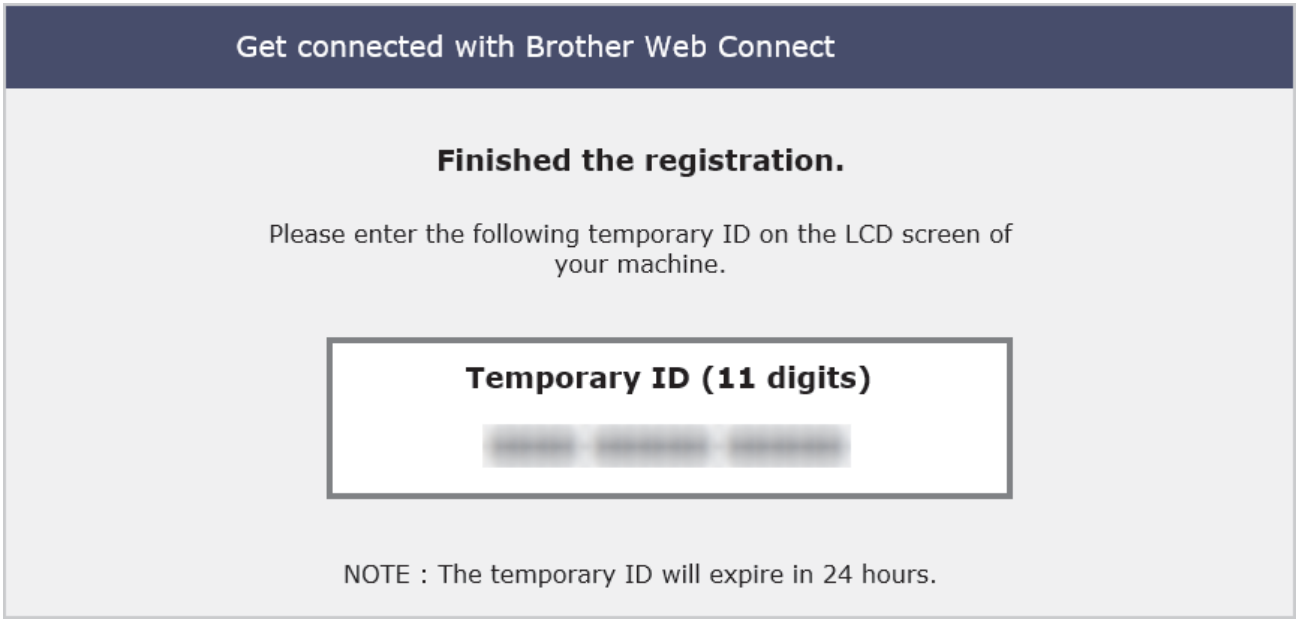

4. Make a note of your temporary ID as you will need it to register accounts to the machine. The temporary ID is valid for 24 hours.
5. Close the web browser.

Now that you have a Brother Web Connect access ID, you must register this ID on your machine, and then use your machine to access the web service you want to use.

Related Information

- Set Up Brother Web Connect

Register an Account on Your Brother Machine for Brother Web Connect

You must enter your Brother Web Connect account information and configure your machine so that it can use Brother Web Connect to access the service you want.

- You must apply for Brother Web Connect access to register an account on your machine.
- Before you register an account, confirm that the correct date and time are set on the machine's control panel.

1. Press ◀ or ▶ to display [Web].

   Press [Web].

   - If information regarding the Internet connection appears on the machine's LCD, read the information and press [OK].
   - Occasionally, updates or announcements about Brother Web Connect's features will appear on the LCD. Read the information, and then press [OK].

2. Press ▲ or ▼ to display the service with which you want to register.

   Press the service name.

3. If information regarding Brother Web Connect appears, press [OK].
4. Press [Register/Delete] > [Register Account].
5. The machine will prompt you to enter the temporary ID you received when you applied for Brother Web Connect access.

   Press [OK].

6. Enter the temporary ID using the LCD, and then press [OK].

   An error message will appear on the LCD if the information you entered does not match the temporary ID you received when you applied for access, or if the temporary ID has expired. Either enter the temporary ID correctly, or apply for access again and receive a new temporary ID.

7. The machine will prompt you to enter the account name that you want to be displayed on the LCD.

   Press [OK].

8. Enter the name using the LCD, and then press [OK].
9. Do one of the following:
   - To set a PIN for the account, press [Yes]. (A PIN prevents unauthorised access to the account.) Enter a four-digit number, and then press [OK].
   - If you do not want to set a PIN, press [No].

   When the account information you entered appears, confirm that it is correct.

10. Press [Yes] to register your information as entered.
11. Press [OK].

    Account registration is complete and your machine can now access the service.

12. Press .

Related Information

- Set Up Brother Web Connect

Scan and Upload Documents Using Brother Web Connect

Upload your scanned photos and documents directly to a web service without using a computer.

- When scanning and uploading JPEG files or searchable PDF, monochrome scanning is not available.
- When scanning and uploading Microsoft Office files, monochrome scanning and grey scanning are not available.
- When scanning and uploading JPEG files, each page is uploaded as a separate file.
- Uploaded documents are saved in an album named **From_BrotherDevice**.

For information regarding restrictions, such as the size or number of documents that can be uploaded, refer to the respective service's website.

If you are a restricted Web Connect user, due to the enabled Secure Function Lock feature (available for certain models), you cannot upload the scanned data.

1. Load your document.
2. Press ◀ or ▶ to display [Web].

   Press [Web].

   - You can also press [Scan] > [to Web].
   - If information regarding the Internet connection appears on the machine's LCD, read the information and press [OK].
   - Occasionally, updates or announcements about Brother Web Connect's features will appear on the LCD. Read the information, and then press [OK].

3. Press ▲ or ▼ to display the service that hosts the account to which you want to upload.

   Press the service name.
4. Press ▲ or ▼ to display your account name, and then press it.
5. If the PIN entry screen appears, enter the four-digit PIN and press [OK].
6. Press [Upload: Scanner].

   If you pressed [Scan] > [to Web], this option does not appear.

7. Follow the on-screen instructions to complete this operation.

Related Information

- Brother Web Connect

Upload a Document from an External Memory Device Using Brother Web Connect

Documents saved on media (such as a USB flash drive) connected to the machine can be uploaded directly to a web service.

Uploaded documents are saved in an album named **From_BrotherDevice**.

For information regarding restrictions, such as the size or number of documents that can be uploaded, refer to the respective service's website.

If you are a restricted Web Connect user due to the Secure Function Lock feature (available for certain models), you cannot upload documents saved on media.

IMPORTANT

DO NOT remove the USB flash drive while the message appears on the LCD. Otherwise, the USB flash drive, or data stored on the USB flash drive could be damaged.

(For Hong Kong, Taiwan and Korea)

Brother Web Connect supports only file names written in English. Files named in the local language will not be uploaded.

1. Insert a USB flash drive into your machine.

When the machine is in Sleep mode, the touchscreen does not display any information even if you connect a USB flash drive to the USB slot. Press the touchscreen to wake up the machine.

2. Press [Web].

- If information regarding the Internet connection appears on the machine's LCD, read the information and press [OK].
- Occasionally, updates or announcements about Brother Web Connect's features will appear on the LCD. Read the information, and then press [OK].

3. Press ▲ or ▼ to display the service that hosts the account to which you want to upload.

   Press the service name.
4. Press ▲ or ▼ to display your account name, and then press it.
5. If the PIN entry screen appears, enter the four-digit PIN and press [OK].
6. Press ▲ or ▼ to display [Upload: Media].

   Press [Upload: Media].
7. Follow the on-screen instructions to complete this operation.

Related Information

- Brother Web Connect

Download and Print Documents Using Brother Web Connect

Documents that have been uploaded to your account can be downloaded directly to your machine and printed. Documents that other users have uploaded to their own accounts for sharing can also be downloaded to your machine and printed, as long as you have viewing privileges for those documents.

1. Press ◀ or ▶ to display [Web].

   Press [Web].

   - If information regarding the Internet connection appears on the machine's LCD, read the information and press [OK].
   - Occasionally, updates or announcements about Brother Web Connect's features will appear on the LCD. Read the information, and then press [OK].

2. Press ▲ or ▼ to display the service that hosts the document you want to download and print.

   Press the service name.

3. Press ▲ or ▼ to display your account name, and then press it. If the PIN entry screen appears, enter the four-digit PIN and press [OK].
4. Press ▲ or ▼ to display [Download: Print].

   Press [Download: Print].

5. Press ▲ or ▼ to display the album you want, and then press it.

   - An album is a collection of documents. However, the actual term may differ depending on the service you use. When using Evernote®, you must select the notebook, and then select the note.
   - Some services do not require documents to be saved in albums. For documents not saved in albums, select [See Unsorted Files] to select documents.

6. Press the file name you want to print. Confirm the document on the LCD and press [OK]. Select additional documents to print (you can select up to 10 documents).
7. When finished, press [OK].
8. Follow the on-screen instructions to complete this operation.

Related Information

- Brother Web Connect

Download and Save a Document to an External Memory Device Using Brother Web Connect

JPEG, PDF and Microsoft Office files can be downloaded from a service and saved directly on media connected to the machine. Documents that other users have uploaded to their own accounts for sharing can also be downloaded to your machine as long as you have viewing privileges for those documents.

- Make sure there is enough available space on your USB flash drive.
- To download other users' documents, you must have access privileges to view the corresponding albums or documents.
- Downloaded files are renamed based on the current date. For example, the first image saved on July 1, would be named 07010001.jpg. Note that the region setting also determines the date format of the file name.
- Images are saved in the "BROTHER" folder, which can be found on the root level of the media.

IMPORTANT

DO NOT remove the USB flash drive while the message appears on the LCD. Otherwise, the USB flash drive, or data stored on the USB flash drive could be damaged.

1. Insert a USB flash drive into your machine.

When the machine is in Sleep mode, the touchscreen does not display any information even if you connect a USB flash drive to the USB slot. Press the touchscreen to wake up the machine.

2. Press [Web].

- If information regarding the Internet connection appears on the machine's LCD, read the information and press [OK].
- Occasionally, updates or announcements about Brother Web Connect's features will appear on the LCD. Read the information, and then press [OK].

3. Press ▲ or ▼ to display the service that hosts the document you want to download.

   Press the service name.

4. Press ▲ or ▼ to display your account name, and then press it. If the PIN entry screen appears, enter the four-digit PIN and press [OK].
5. Press ▲ or ▼ to display [Download: Media].

   Press [Download: Media].

6. Follow the on-screen instructions to complete this operation.

- An album is a collection of documents. However, the actual term may differ depending on the service you use. When using Evernote®, you must select the notebook, and then select the note.
- Some services do not require documents to be saved in albums. For documents not saved in albums, select [See Unsorted Files] to select documents.

Related Information

- Brother Web Connect

FaxForward to Cloud or E-mail

- This feature is available only for monochrome faxes.
- If you turn on this feature, you cannot use the following features:
  - Memory Receive ([Fax Forward], [Fax Storage], [Forward to Network])
  - [PC Fax Receive]
- If there are received faxes still in your machine's memory, you cannot turn off FaxForward.

- Use the FaxForward to Cloud feature to automatically forward incoming faxes to your accounts with the available online services.

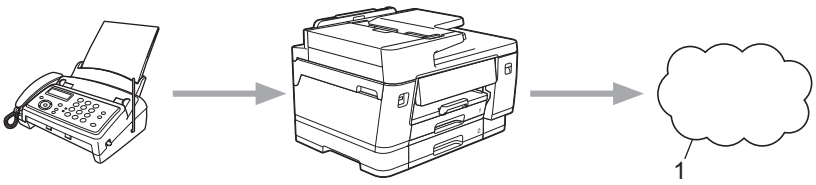

1. Web Service

- Use the FaxForward to E-mail feature to automatically forward incoming faxes to an inbox as email attachments.

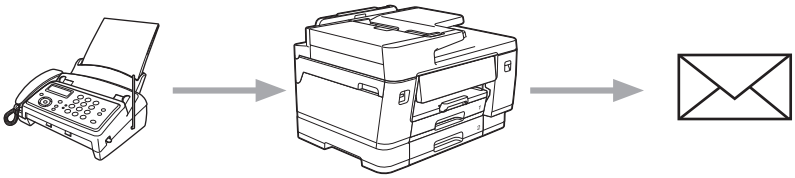

1. Press ◀ or ▶ to display [Apps].

   Press [Apps].

   - If information regarding the Internet connection appears on the machine's LCD, read it, and then press [OK].
   - Occasionally, updates or announcements about Brother Web Connect's features will appear on the LCD. Read the information, and then press [OK].

2. Press ▲ or ▼ to display [FaxForward to Cloud/E-mail].

   Press [FaxForward to Cloud/E-mail].

   If information regarding [FaxForward to Cloud/E-mail] appears, read it, and then press [OK].

3. Press [On].
4. Press [Forward to Cloud] or [Forward to E-mail].
   - If you selected [Forward to Cloud], choose the online service you want to receive the faxes, and then specify your account name.
   - If you selected [Forward to E-mail], select the email address you want to receive the faxes as email attachments.
5. Follow the on-screen instructions to complete this operation.

Related Information

- Brother Web Connect

Troubleshooting

For the latest FAQs & Troubleshooting tips, visit support.brother.com/faqs.

Routine Maintenance

- Replace the Ink Cartridges
- Improve the Print Quality
- Check Your Brother Machine
- Clean Your Brother Machine
- Update Your Machine's Firmware
- Reset Your Machine
- Pack and Ship Your Machine

Replace the Ink Cartridges

Your Brother machine is equipped with an ink dot counter. The ink dot counter automatically monitors the level of ink in each of the four ink cartridges. When the machine detects that an ink cartridge is running out of ink, the machine will display a message.

The LCD displays which ink cartridge needs replacing. Be sure to follow the LCD prompts to replace the ink cartridges in the correct order.

Even though the machine tells you to replace an ink cartridge, there will be a small amount of ink left in the ink cartridge.

CAUTION

If the ink gets into your eye, rinse it with water immediately. If left as is, it may cause redness or mild inflammation of the eye. In case of any abnormality, consult with your doctor.

IMPORTANT

- We recommend using genuine Brother supplies to ensure stable print quality and performance. Although not all non-genuine supplies may cause quality issues, it is possible that some may adversely affect print quality or cause machine malfunction. Brother may charge for repairing your machine if it is proven that non-genuine supplies caused the damage, even if the machine is still covered by the warranty.
- The Supply model number varies depending on your country and region, visit go.brother/original.

1. Open the ink cartridge cover (1).

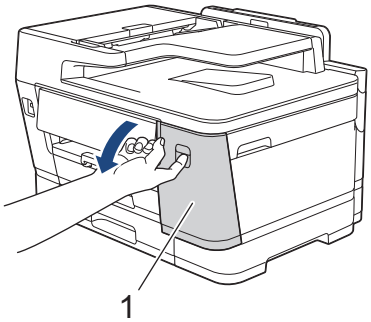

2. Press the lock release lever to release the ink cartridge colour indicated on the LCD and remove the ink cartridge from the machine, as shown in the illustration.

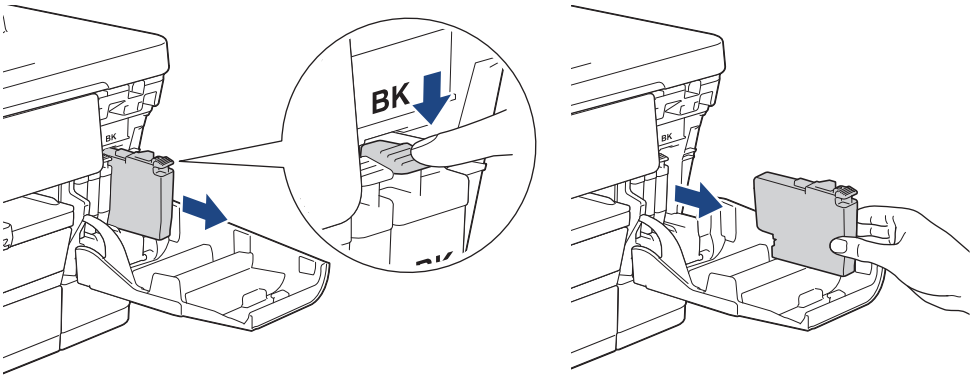

MFC-J6975DW/MFC-J6977DW:

If using an LC528XL series ink cartridge, press the lock release lever to remove the ink cartridge, as shown in the illustration.

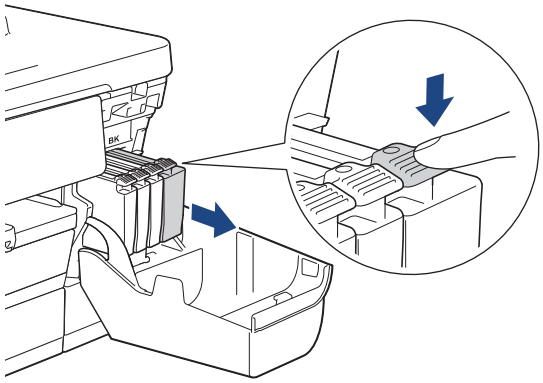

3. Open the new ink cartridge bag for the colour indicated on the LCD, and take out the ink cartridge.

IMPORTANT

- DO NOT touch the ink cartridge in the area indicated (1); this can prevent the machine from detecting the cartridge.

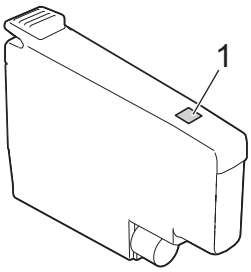

- Quickly shake just the **black** ink cartridge horizontally 15 times as shown, before inserting it into the machine.

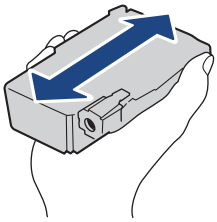

4. Insert the ink cartridge in the direction of the arrow on the label.

   Each colour has its own correct position.

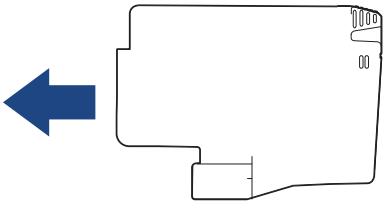

5. Gently push the area marked “PUSH” until the ink cartridge locks into place, and then close the ink cartridge cover.

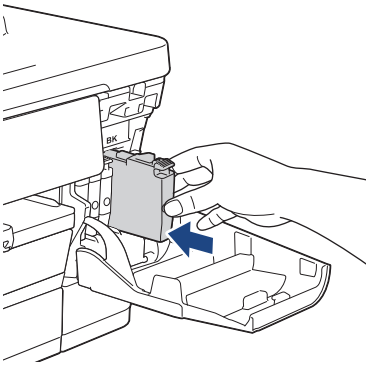

The machine resets the ink dot counter.

- If the machine does not detect the ink cartridge after you install it, check that the ink cartridge is installed correctly. Remove the ink cartridge and reinstall it slowly until it locks into place.
- MFC-J6975DW/MFC-J6977DW:

  If using LC528XL series ink cartridges, the ink cartridges fit in the machine as shown in the illustration.

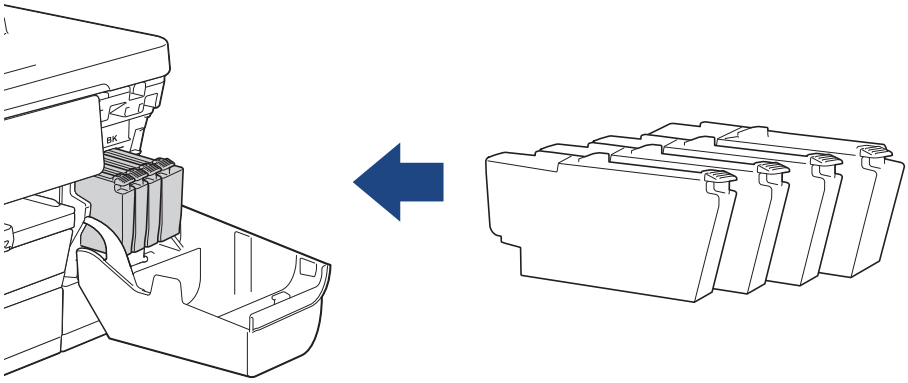

IMPORTANT

- DO NOT shake the ink cartridges, once installed into the machine. If ink stains your skin or clothing, wash with soap or detergent at once.
- DO NOT remove ink cartridges if you do not need to replace them; otherwise, the machine will not know the ink quantity left in the cartridge.
- DO NOT touch the ink cartridge insertion slots; the ink may stain your skin.
- Use unopened ink cartridges by the expiration date written on the ink cartridge package.
- DO NOT dismantle or tamper with the ink cartridge; this can cause the ink to leak out of the ink cartridge.

Related Information

- Routine Maintenance

Related Topics:

- Pack and Ship Your Machine

Improve the Print Quality

- Clean the Print Head from Your Brother Machine
- Clean the Print Head Using Web Based Management
- Clean the Print Head from Your Computer (Windows)
- Automatically Detect and Improve the Condition of Print Head Nozzles
- Correct the Paper Feed to Clear Vertical Lines
- Change the Print Options to Improve Your Print Results

Clean the Print Head from Your Brother Machine

To maintain good print quality, the machine automatically cleans the print head when needed. If there is a print quality problem, start the cleaning process manually.

- Clean the print head if there is a horizontal line or a blank space in the text or graphics on printed pages.
- Cleaning the print head consumes ink.
- Cleaning too often uses ink unnecessarily.

IMPORTANT

DO NOT touch the print head. Touching the print head may cause permanent damage and may void the print head's warranty.

1. Press [Ink] > [Print Head Cleaning].
2. Press [Start].

   The machine cleans the print head.

NOTE

If you clean the print head several times and the print has not improved, try the Special cleaning method. The Special cleaning method uses the most power in cleaning the print head, but also consumes the most ink.

1. Press [Ink] > [Print Head Cleaning].
2. Press for five seconds.

   The machine starts cleaning.

- The Special cleaning method requires a large amount of ink to clean the print head.
- Use the Special cleaning method only if you previously cleaned the print head several times and the print quality did not improve.
- You can also clean the print head from your computer.

Related Information

- Improve the Print Quality

Related Topics:

- Clean the Print Head from Your Computer (Windows)
- Clean the Print Head Using Web Based Management

Clean the Print Head Using Web Based Management

To maintain good print quality, the machine automatically cleans the print head when needed. If there is a print quality problem, start the cleaning process manually.

1. Start Web Based Management. See Access Web Based Management.
2. In the left navigation bar, click **General** > **Print Head Cleaning**.

If the left navigation bar is not visible, start navigating from ≡.

3. If you have print quality problems, try cleaning the print head several times. If the print quality does not improve, use the **Special** option. The **Special** option uses the most power in cleaning the print head, but also consumes the most ink.
4. Click **Start**.

The **Special** option requires a large amount of ink to clean the print head.

5. Click **Yes**.

   The machine starts cleaning.

(Windows) You can also clean the print head using the printer driver.

Related Information

- Improve the Print Quality

Related Topics:

- Access Web Based Management
- Clean the Print Head from Your Brother Machine
- Clean the Print Head from Your Computer (Windows)

Clean the Print Head from Your Computer (Windows)

To maintain good print quality, the machine automatically cleans the print head when needed. If there is a print quality problem, start the cleaning process manually.

1. Hold down the [⊞] key and press the [R] key on the computer's keyboard to launch **Run**.
2. Type **"control printers"** in the **Open:** field and click **OK**.

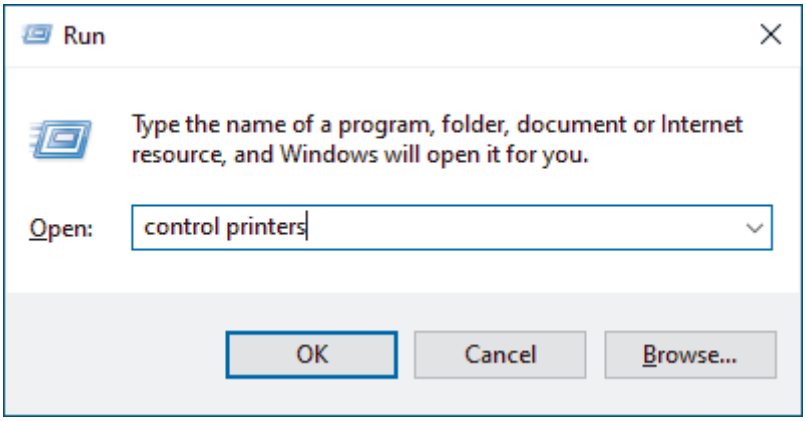

The **Devices and Printers** window appears.

If the **Devices and Printers** window does not appear, click **Devices** > **More devices and printer settings**.

3. Right-click your model's icon, and then select **Printing preferences**. (If printer driver options appear, select your printer driver.)

   The printer driver dialog box appears.
4. Click the **Maintenance** tab.
5. Select one of the following options:

Option	Description
Check Print Quality...	Use to print the test page and check the print quality.
Print Head Cleaning...	Use to start the cleaning process manually. Select if a line or blank spaces appear in text or graphics on the test page.

6. Click **Start**.

Related Information

- Improve the Print Quality

Related Topics:

- Clean the Print Head from Your Brother Machine
- Clean the Print Head Using Web Based Management

Automatically Detect and Improve the Condition of Print Head Nozzles

If faded or streaked colours and text appear or if text is missing on your printouts, the print head nozzles may be clogged. When this setting is [On], the machine automatically detects the condition of the print head nozzles and cleans the print head when needed.

- The default setting is [On].
- Cleaning the print head consumes ink.

1. Press [Ink] > [Print Quality Auto Check].
2. Press [On] or [Off].
3. Press .

Related Information

- Improve the Print Quality

Correct the Paper Feed to Clear Vertical Lines

Adjust the paper feed to reduce vertical lines.

Before adjusting the paper feed, complete a print quality check first by pressing [Ink] > [Improve Print Quality] > [Check Print Quality].

1. Press [Ink] > [Improve Print Quality] > [Correct Paper Feed].
2. Press [Next].
3. Press [Yes] after a confirmation message if a print quality check has been completed appears on the LCD.
4. Press [Auto] or [Manual].
   - If you select the [Auto] mode, the paper feed is automatically adjusted by scanning the check sheet.
   - If you select the [Manual] mode, you need to input information printed on the check sheet manually.
5. Select the paper size you want to adjust.
6. Select the paper type you want to adjust. (Supported models only)
7. Follow the LCD instruction to load paper in the tray, and then press [Start].

   The machine prints the check sheet.
8. Follow the LCD instructions to complete the adjustment.

Related Information

- Improve the Print Quality

Change the Print Options to Improve Your Print Results

If your printouts do not look the way you expect, change the print settings on your Brother machine to improve printout quality. Print speed may be slower when using these settings.

- These instructions allow you to improve your print results when you are using your machine for copying or printing from media, or a mobile device.
- If you are experiencing poor print quality when printing from your computer, change the settings in the printer driver or in the application you use to print.

1. Press [Ink] > [Print Options].
2. Press one of the following options:

Option	Description
Reduce Smudging	Select this option if you have problems with smudged printouts or paper jams.
Reduce Uneven Lines	Select this option according to your paper size if you have problems with uneven lines.
Enhance Print	Select this option if you have problems with blurred printouts.

3. Follow the LCD menus.
4. Press .

Related Information

- Improve the Print Quality

Related Topics:

- Copy on Both Sides of the Paper (2-sided Copy)
- Printer Driver Settings (Windows)

Check Your Brother Machine

- Check the Machine Information
- Check the Print Quality
- Check the Print Alignment from Your Brother Machine
- Check the Ink Volume (Page Gauge)
- Monitor Machine Status Using Brother iPrint&Scan (Windows/Mac)

Check the Machine Information

Follow these instructions to check your machine's information, such as the serial number or the firmware version.

1. Press [Settings] > [All Settings] > [Machine Info.].
2. Press one of the following options:

Option	Description
Serial No.	Check your machine's serial number.
Firmware Version	Check your machine's firmware version.
Firmware Update	Update your machine to the latest firmware.
Firmware Update Setup	Set the days and times for automatic firmware updates.
Page Counter	Check the total number of pages the machine has printed.

3. Press .

Related Information

- Check Your Brother Machine

Check the Print Quality

If faded or streaked colours and text appear or if text is missing on your printouts, the print head nozzles may be clogged. Print the check sheet and look at the nozzle check pattern.

1. Press [Ink] > [Improve Print Quality] > [Check Print Quality].
2. Press [Start].

   The machine prints the check sheet.
3. Check the quality of the four colour blocks on the sheet.
4. When an LCD message prompts you to check the print quality, do one of the following:
   - If all lines are clear and visible, press [No], and then press to finish the Print Quality check.
   - If lines are missing (see **Poor**, as follows), press [Yes].

OK

Poor

5. When the LCD message prompts you to check the print quality of each colour, press the number of the pattern (1–4) that most closely matches the printing result.
6. Do one of the following:
   - If print head cleaning is needed, press [Start] to start the cleaning procedure.
   - If print head cleaning is not needed, the menu screen reappears on the touchscreen. Press .
7. After the cleaning procedure is finished, the LCD message prompts you to print the check sheet again. Press [Yes], and then press [Start].

   The machine prints the check sheet again. Check the quality of the four colour blocks on the sheet again.

If you clean the print head several times and the print has not improved, try the Special cleaning method. See *Related Information*.

IMPORTANT

DO NOT touch the print head. Touching the print head may cause permanent damage and may void the print head's warranty.

When a print head nozzle is clogged, the printed sample looks like this:

After the print head nozzle is cleaned, the lines are gone:

Related Information

- Check Your Brother Machine

Related Topics:

- Clean the Print Head from Your Brother Machine
- Check the Print Alignment from Your Brother Machine
- Correct the Paper Feed to Clear Vertical Lines

Check the Print Alignment from Your Brother Machine

If your printed text becomes blurred or images become faded after transporting the machine, adjust the print alignment.

Before adjusting the print alignment, complete a print quality check first by pressing [Ink] > [Improve Print Quality] > [Check Print Quality].

1. Press [Ink] > [Improve Print Quality] > [Alignment].
2. Press [Next].
3. Press [Yes] after a confirmation message if a print quality check has been completed appears on the LCD.
4. Press [Auto] or [Manual].
   - If you select the [Auto] mode, the print alignment is automatically adjusted by scanning the check sheet.
   - If you select the [Manual] mode, you need to input information printed on the check sheet manually.
5. Select the paper size you want to adjust.
6. Select the paper type you want to adjust. (Supported models only)
7. If you selected the [Manual] mode, select either [Basic alignment] or [Advanced alignment] in the following step.
8. Follow the LCD instruction to load paper in the tray, and then press [Start].

   The machine prints the check sheet.
9. Follow the LCD instructions to complete the adjustment.

When the print alignment is not adjusted correctly, text looks blurry or crooked, like this:

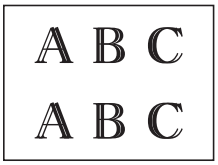

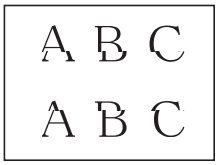

After the print alignment is adjusted correctly, text looks like this:

Related Information

- Check Your Brother Machine

Check the Ink Volume (Page Gauge)

Although an ink volume icon appears on the machine's LCD, you can view a larger graph that displays the approximate ink remaining in each cartridge.

1. Press [Ink] > [Ink Volume].

   The touchscreen displays the ink volume and the page gauge [1].

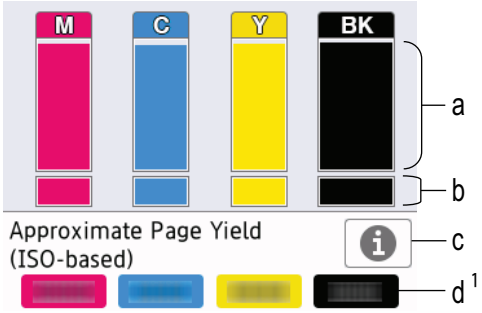

   a. Displays the cartridge ink level.
   b. Displays the ink level remaining in the internal ink reservoir.
   c. Press to change the display settings for the approximate page yield.
   d. The page gauge [1] shows the approximate number of remaining pages that can be printed with the cartridges.

- When the ink cartridge is near the end of its life or having a problem, one of the following icons appears:

	The ink level is low.
	The ink cartridge needs to be replaced.

- To check or print the ink cartridge model numbers, press (Back) to return to the [Ink] menu screen.

  Press [Ink Cartridge Model], and follow the instructions on the touchscreen.

2. Press .

- You can also check the ink volume from your computer.
- For detailed information about the measuring methods used for the approximate yields, visit support.brother.com/yield.

Related Information

- Check Your Brother Machine

Related Topics:

- Touchscreen LCD Overview
- Settings Screen Overview
- Monitor Machine Status Using Brother iPrint&Scan (Windows/Mac)
- Print a Document (Windows)

1 Page Gauge is an estimate for informational purposes only and does not display the actual remaining page yield. For actual cartridge yield information, visit support.brother.com/yield.

Monitor Machine Status Using Brother iPrint&Scan (Windows/Mac)

Brother iPrint&Scan allows you to monitor your Brother machine's status.

1. Start Brother iPrint&Scan.
   - Windows

     Double-click the (**Brother iPrint&Scan**) icon.
   - Mac

     In the **Finder** menu bar, click **Go** > **Applications**, and then double-click the iPrint&Scan icon.

   The Brother iPrint&Scan screen appears.
2. If your Brother machine is not selected, click the **Add Machine** / **Select your Machine** button, and then select your model's name from the list. Click **OK**.

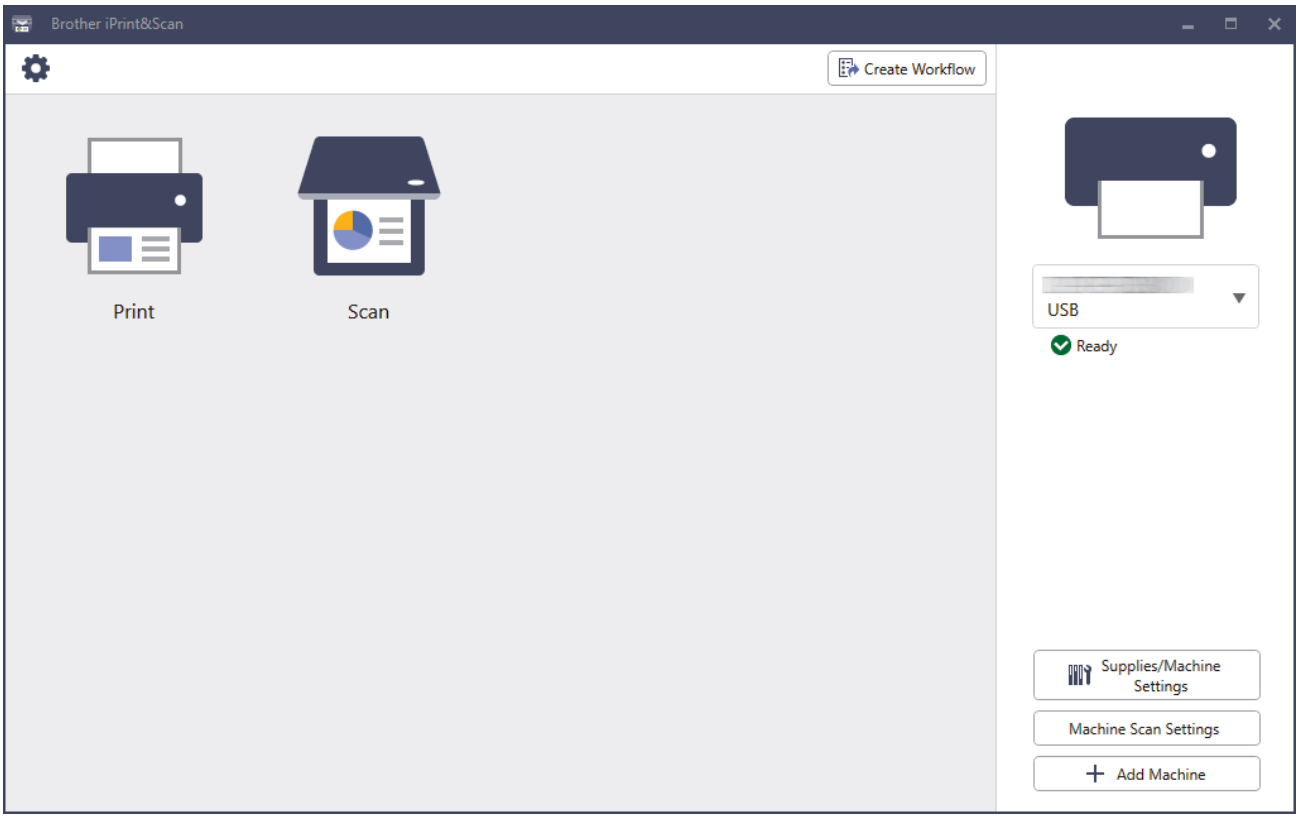

Status icons

Icon	Description
	A green icon indicates the normal stand-by condition.
	A yellow icon indicates a warning.
	A red icon indicates an error has occurred.
	A grey icon indicates the machine is offline.

Error icons

Icon	Description
!	The ink level is low.
✕	The ink cartridge needs to be replaced.

- The actual screen may differ depending on the version of the application.
- The remaining ink amount is approximate and may differ from the actual amount of remaining ink.
- You can also check the remaining ink amount using Web Based Management.

Related Information

- Check Your Brother Machine

Related Topics:

- Check the Ink Volume (Page Gauge)

Clean Your Brother Machine

- Clean the Scanner
- Clean the ADF Document Sensor
- Clean the Machine's LCD
- Clean the Outside of the Machine
- Clean the Machine's Printer Platen
- Clean the Paper Feed Rollers
- Clean the Base Pad
- Clean the Paper Pick-up Rollers for Paper Tray #1
- Clean the Paper Pick-up Rollers for Paper Tray #2 and Paper Tray #3

Clean the Scanner

1. Unplug the machine from the electrical socket.
2. Lift the document cover (1). Clean the scanner glass (2) and the white plastic (3) with a soft lint-free cloth moistened with water.

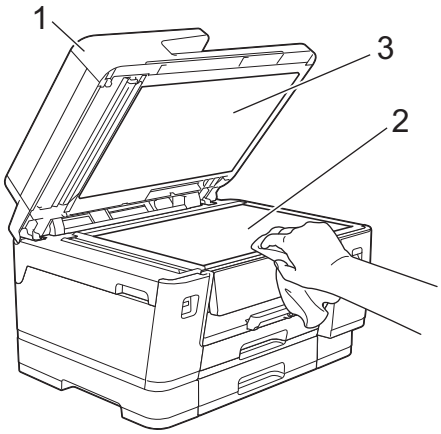

3. In the ADF unit, clean the white bar (1) and the glass strip (2) with a lint-free cloth moistened with water.

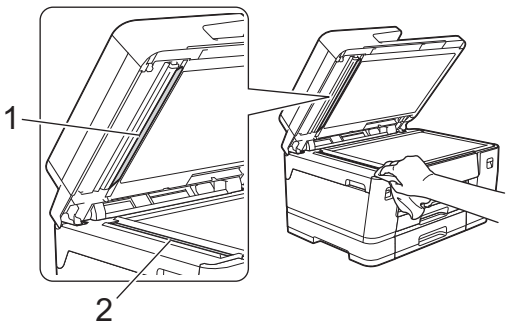

4. (MFC-J3960DW/MFC-J6760DW/MFC-J6960DW/MFC-J6975DW/MFC-J6977DW) Open the scanner glass cover (1), and clean the white bar (2) and the glass strip (3) with a soft lint-free cloth moistened with water.

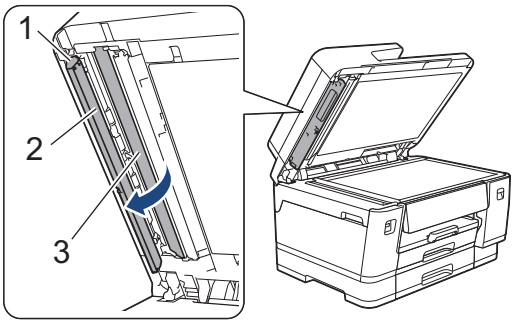

5. Close the document cover.
6. Reconnect the power cord.

If you feel dirt or debris, clean the glass again. You may need to repeat the cleaning process three or four times. To test, make a copy after each cleaning attempt.

When there is a spot of dirt or correction fluid on the glass strip, the printed sample shows a vertical line.

After the glass strip is cleaned, the vertical line is gone.

Related Information

- Clean Your Brother Machine

Clean the ADF Document Sensor

Related Models: MFC-J6975DW/MFC-J6977DW

Cleaning the ADF document sensor periodically may prevent the machine from detecting the wrong document size.

1. Clean the ADF document sensor (1) with a dry, soft lint-free cloth.

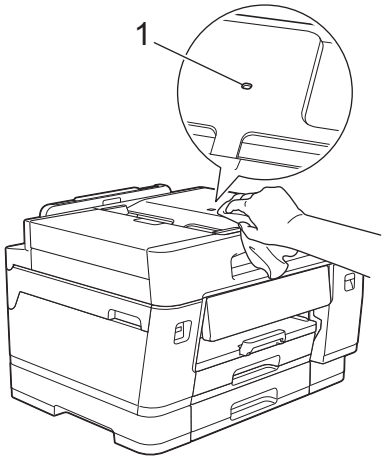

Related Information

- Clean Your Brother Machine

Clean the Machine's LCD

IMPORTANT

DO NOT use liquid cleaners (including ethanol).

1. Press and hold down ⏻ to turn off the machine. The LCD displays `[Shutting Down]` for a few seconds before the power goes off.
2. Clean the LCD with a dry, soft lint-free cloth.

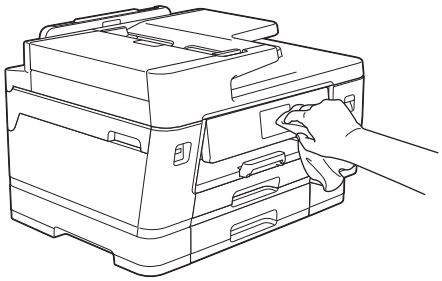

Related Information

- Clean Your Brother Machine

Clean the Outside of the Machine

IMPORTANT

- Cleaning with volatile liquids such as thinner or benzine will damage the outside surface of the machine.
- DO NOT use cleaning materials that contain ammonia.
- DO NOT use isopropyl alcohol to remove dirt from the control panel. It may crack the panel.

1. If the paper support flap is open, close it, and then close the paper support.
2. Pull the paper trays (1) completely out of the machine as shown by the arrow.
   - Tray #1

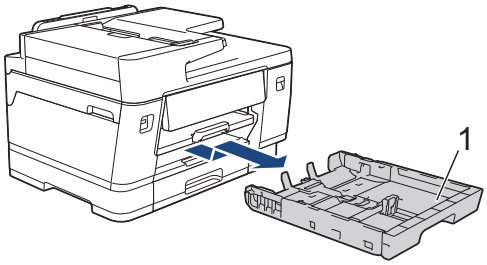

   - Tray #2 (MFC-J3960DW/MFC-J6960DW/MFC-J6975DW/MFC-J6977DW)

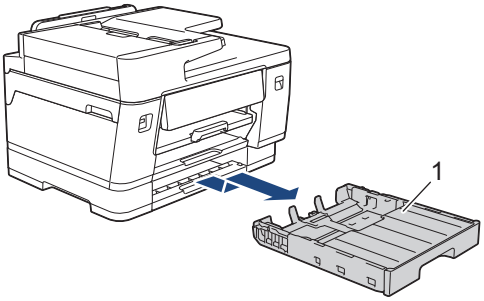

   - Tray #3 (MFC-J6977DW)

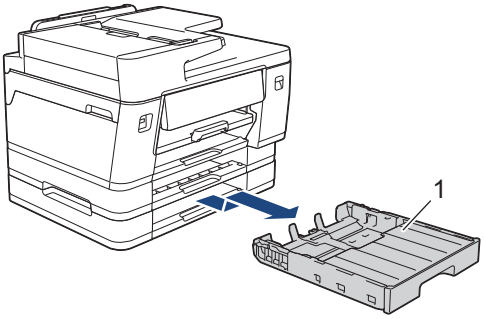

3. Lift the paper support (1), and then pull it at an angle completely out of the machine as shown by the arrow.

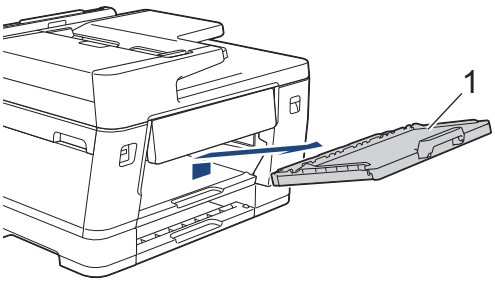

4. Wipe the outside of the machine with a dry, lint-free cloth to remove dust.

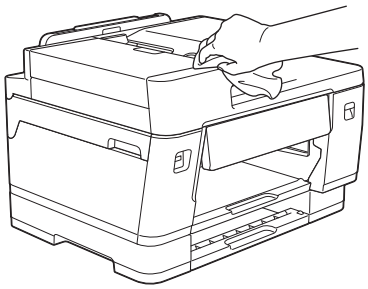

5. MFC-J3960DW/MFC-J6960DW/MFC-J6975DW/MFC-J6977DW:
   Remove the tray top cover from Tray #2 or Tray #3 (MFC-J6977DW).

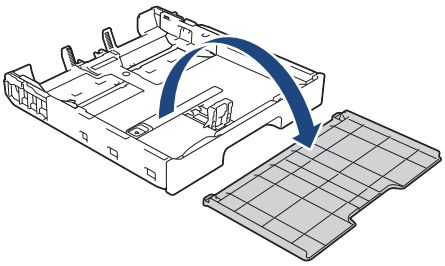

6. Remove anything that is stuck inside the paper tray. Wipe the inside and the outside of the paper tray with a dry, lint-free cloth to remove dust.

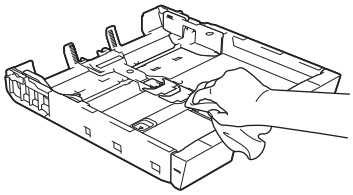

7. Wipe the outside of the paper support with a dry, lint-free cloth to remove dust.

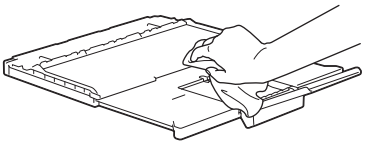

8. Place the paper support firmly back in the machine. Make sure you fit the paper support into the channels.

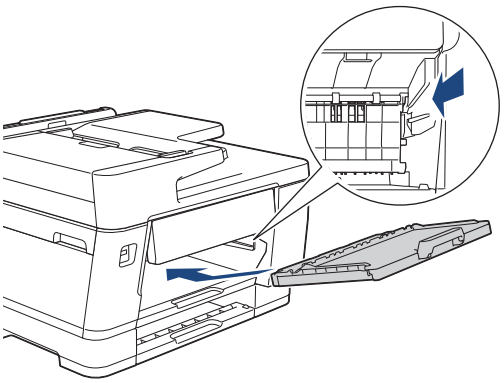

9. MFC-J3960DW/MFC-J6960DW/MFC-J6975DW/MFC-J6977DW:
   Replace the tray top cover for Tray #2 or Tray #3 (MFC-J6977DW).
10. Slowly push the paper tray completely into the machine.

Related Information

- Clean Your Brother Machine

Clean the Machine's Printer Platen

WARNING

Be sure to unplug the machine from the electrical socket before cleaning the printer platen to avoid an electrical shock.

1. Unplug the machine from the electrical socket.
2. Using both hands, use the finger holds on each side of the machine to lift the scanner cover into the open position.
3. Clean the machine’s printer platen (1) and the area around it, wiping off scattered ink with a dry, soft lint-free cloth.

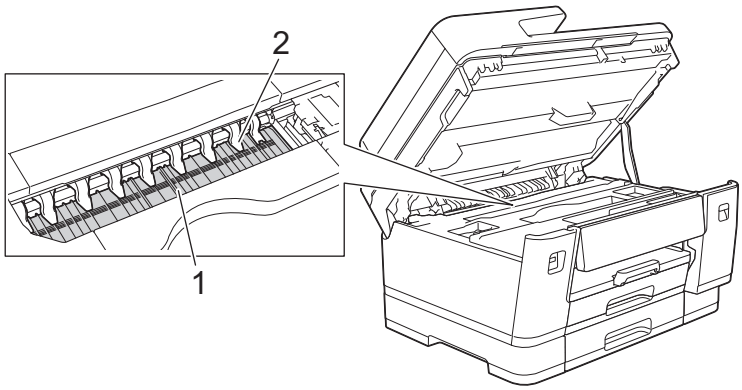

IMPORTANT

DO NOT bend or apply too much pressure on the nine tabs (2). They could be damaged.

4. Gently close the scanner cover using the finger holds on each side.

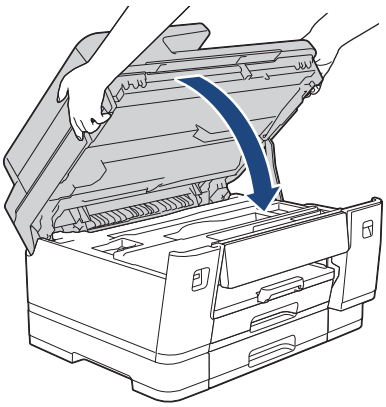

5. Reconnect the power cord.

Related Information

- Clean Your Brother Machine

Clean the Paper Feed Rollers

If the paper feed rollers are stained with ink or have a buildup of paper dust, it may cause paper feed problems.

1. Unplug the machine from the electrical socket.
2. If the paper support flap is open, close it, and then close the paper support.
3. Pull the paper tray (1) completely out of the machine as shown by the arrow.

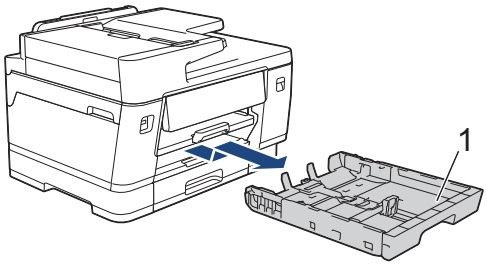

4. Lift the paper support (1), and then pull it at an angle completely out of the machine as shown by the arrow.

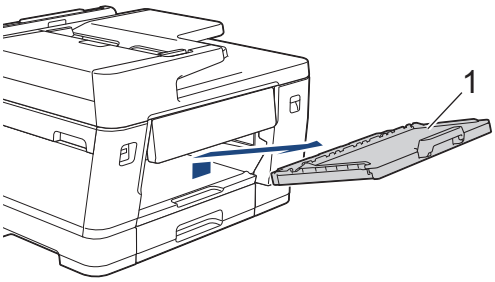

5. Clean the front side of the Paper Feed Rollers (1) with a soft lint-free cloth moistened with water, using a side-to-side motion. After cleaning, wipe the rollers with a dry, soft lint-free cloth to remove all moisture.

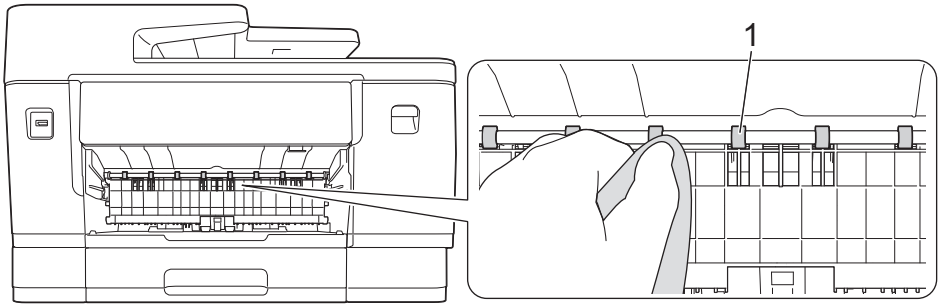

6. Lift the internal flap (2), and then clean the back side of the Paper Feed Rollers (1) with a soft lint-free cloth moistened with water. After cleaning, wipe the rollers with a dry, soft lint-free cloth to remove all moisture.

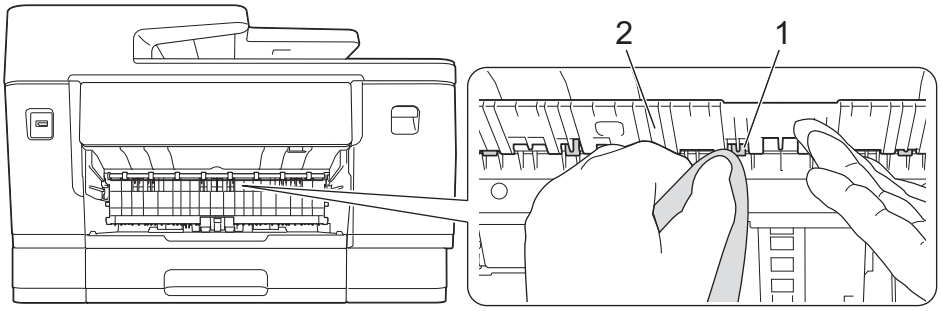

7. Place the paper support firmly back in the machine. Make sure you fit the paper support into the channels.

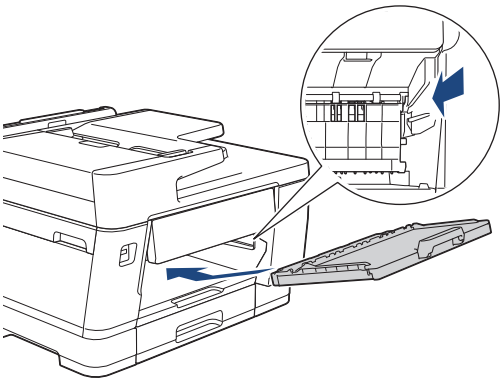

8. Slowly push the paper tray completely into the machine.
9. Reconnect the power cord.

Do not use the machine again until the rollers are dry. Using the machine before the rollers are dry may cause paper feed problems.

Related Information

- Clean Your Brother Machine

Clean the Base Pad

Cleaning the Base Pad periodically may prevent the machine from feeding multiple sheets of paper when there are only a few sheets of paper left in the tray.

1. If the paper support flap is open, close it, and then close the paper support.
2. Pull the paper trays (1) completely out of the machine as shown by the arrow.
   - Tray #1

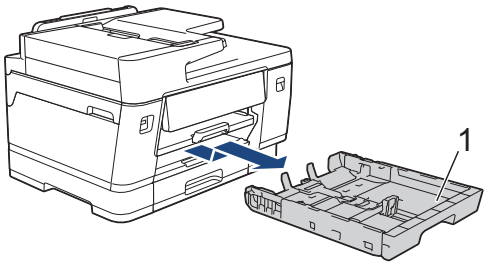

   - Tray #2 (MFC-J3960DW/MFC-J6960DW/MFC-J6975DW/MFC-J6977DW)

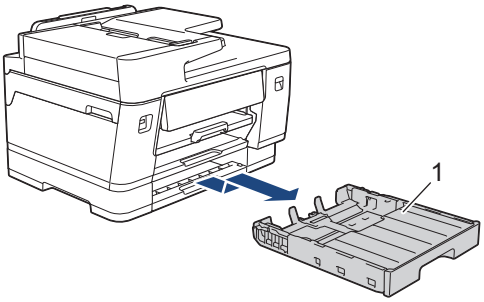

   - Tray #3 (MFC-J6977DW)

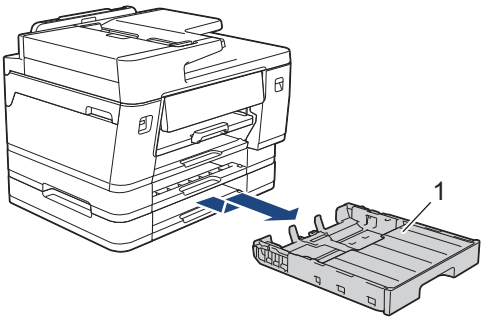

3. Clean the Base Pad (1) with a soft lint-free cloth moistened with water.
   After cleaning, wipe the pad with a dry, soft lint-free cloth to remove any moisture.

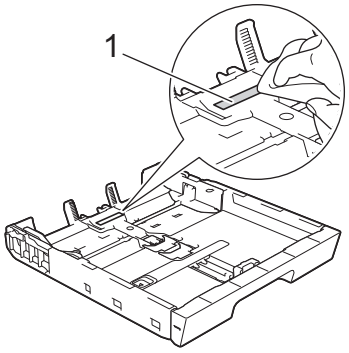

4. Slowly push the paper tray completely into the machine.

Related Information

- Clean Your Brother Machine

Clean the Paper Pick-up Rollers for Paper Tray #1

Cleaning the paper pick-up rollers periodically may prevent paper jams by ensuring that paper feeds correctly.

1. Unplug the machine from the electrical socket.
2. If the paper support flap is open, close it, and then close the paper support.
3. Pull the paper tray (1) completely out of the machine as shown by the arrow.

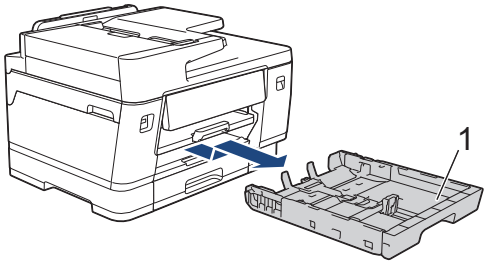

4. Lift the paper support (1), and then pull it at an angle completely out of the machine as shown by the arrow.

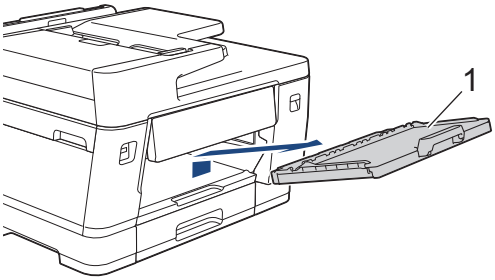

5. Clean the Paper Pick-up Rollers (1) with a soft lint-free cloth moistened with water. Slowly turn the rollers so that the whole surface is cleaned. After cleaning, wipe the rollers with a dry, soft lint-free cloth to remove all moisture.

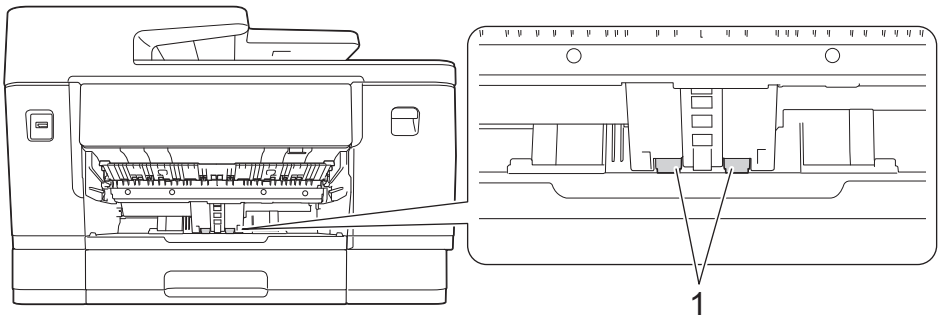

6. Place the paper support firmly back in the machine. Make sure you fit the paper support into the channels.

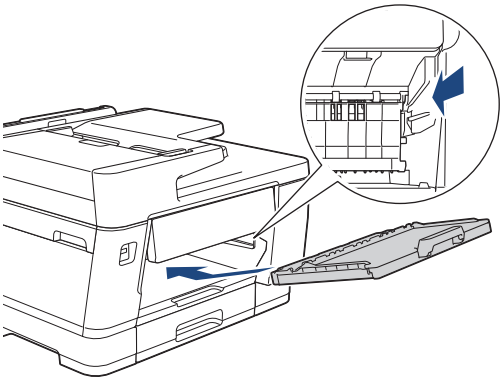

7. Slowly push the paper tray completely into the machine.
8. Reconnect the power cord.

Related Information

- Clean Your Brother Machine

Clean the Paper Pick-up Rollers for Paper Tray #2 and Paper Tray #3

Related Models: MFC-J3960DW/MFC-J6960DW/MFC-J6975DW/MFC-J6977DW

These instructions describe how to clean the paper pick-up rollers for Tray #2.

(MFC-J6977DW) The steps for Tray #3 are very similar.

1. Unplug the machine from the electrical socket.
2. If the paper support flap is open, close it, and then close the paper support.
3. Pull Tray #2 (1) completely out of the machine as shown by the arrow.

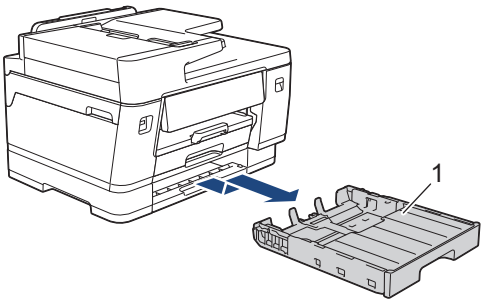

4. Clean the paper pick-up rollers for Tray #2 (1) with a soft lint-free cloth moistened with water. Slowly turn the rollers so that the whole surface is cleaned. After cleaning, wipe the rollers with a dry, soft lint-free cloth to remove all moisture.

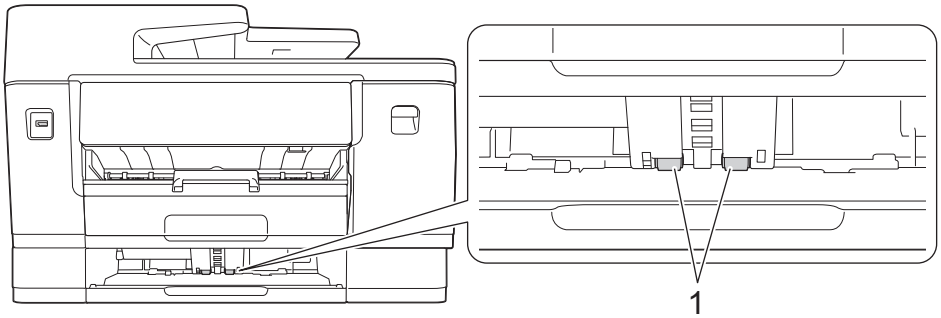

5. Slowly push Tray #2 completely into the machine.
6. Reconnect the power cord.

Related Information

- Clean Your Brother Machine

Update Your Machine's Firmware

- An Internet connection is required to update the firmware.
- Do not unplug the power cord during the firmware update.

To keep your machine up to date, check support.brother.com/downloads periodically for the latest firmware. Without the most current firmware, some of your machine's functions may become unavailable.

You can also manually update the firmware directly from your machine or set it to update periodically, by following these steps:

1. Press [Settings] > [All Settings] > [Machine Info.].
2. Do one of the following:

Option	Description
Update the firmware manually.	Press Firmware Update. Follow the LCD instructions.
Set your machine to automatically update firmware.	Press Firmware Update Setup > Update Method > Auto Install, then select the days and enter the time for the firmware update. Press .

Related Information

- Routine Maintenance

Related Topics:

- Check Your Machine's Password

Reset Your Machine

- Reset Functions Overview
- Reset Your Machine

Reset Functions Overview

The following reset functions are available:

1. [Machine Reset]

   You can reset all the machine's settings that you have changed, such as Date and Time.

   The following will remain:

   - The Address Book, Fax data, and Call History
   - The administrator password
   - Network settings
   - Secure Function Lock settings (For models with Secure Function Lock function)

2. [Network]

   Reset the print server to its default factory settings (including all IP Address information except the administrator password).

   You can reset the administrator password using the [All Settings] reset option.

3. [Address Book & Fax]

   Address Book & Fax resets the following:

   - Address Book and Setup Groups
   - Programmed fax jobs in the memory

     Delayed Fax and Delayed Batch Transmission
   - Station ID

     Name and Number
   - Memory Receive Options

     Fax Forwarding
   - Report

     Transmission Verification Report, Address Book and Fax Journal
   - History

     Caller ID History and Outgoing Call
   - Faxes in memory

4. [Stored Fax Data]

   Stored Fax Data resets the following:

   - History

     Caller ID History and Outgoing Call
   - Faxes in memory

5. [All Settings]

   Use this reset function to reset all of the machine's settings to the settings originally set at the factory.

   We strongly recommend you perform this operation when you dispose of the machine.

   Unplug the interface cable before you select [Network] or [All Settings].

Related Information

- Reset Your Machine

Related Topics:

- Reset Your Machine

Reset Your Machine

1. Press [Settings] > [All Settings] > [Initial Setup] > [Reset].
2. Press the reset option you want to use.
3. Press [Next].
4. Press [OK] for two seconds to reboot the machine.
5. Wait until the machine restarts and the Power LED indicator lights up before disconnecting the machine from the power source.

Related Information

- Reset Your Machine

Related Topics:

- Reset Functions Overview

Pack and Ship Your Machine

- When you transport the machine, use the packing materials that came with your machine. Do not tip or turn the product upside down. If you do not pack the machine correctly, any damage that may occur in transit may not be covered by your warranty.
- The machine should be adequately insured with the carrier.

IMPORTANT

It is important to allow the machine to “park” the print head after a print job. Listen carefully to the machine before unplugging it to make sure that all mechanical noises have stopped. Not allowing the machine to finish this parking process may lead to print problems and possible damage to the print head.

1. Unplug the machine from the electrical socket.
2. Using both hands, use the finger holds on each side of the machine to lift the scanner cover into the open position. Then unplug the machine from the telephone wall socket and take the telephone line cord out of the machine.
3. Unplug the interface cable from the machine, if it is connected.
4. Gently close the scanner cover using the finger holds on each side.

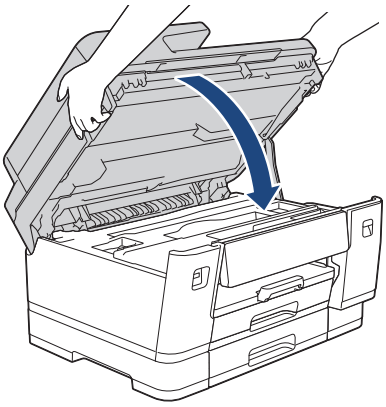

5. Open the ink cartridge cover.
6. Press the ink release levers to release the ink cartridges and then take out the ink cartridges.

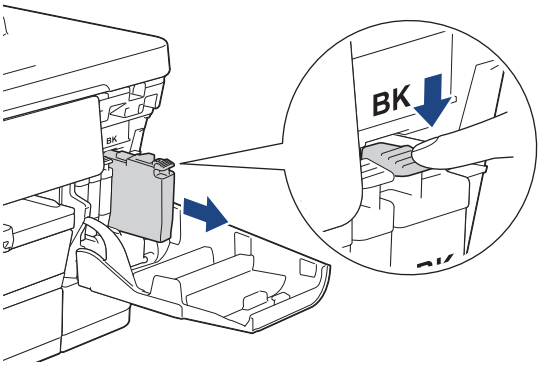

7. Close the ink cartridge cover.

8. Wrap the machine in the bag.

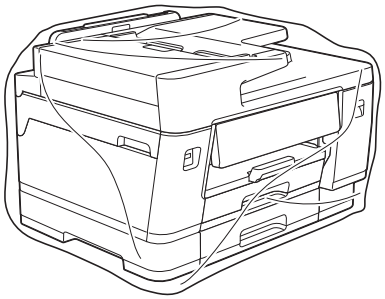

9. Pack the machine in the original carton with the original packing material as shown below. (The original packing material may differ depending on your country.)

   Do not pack the used ink cartridge in the carton.

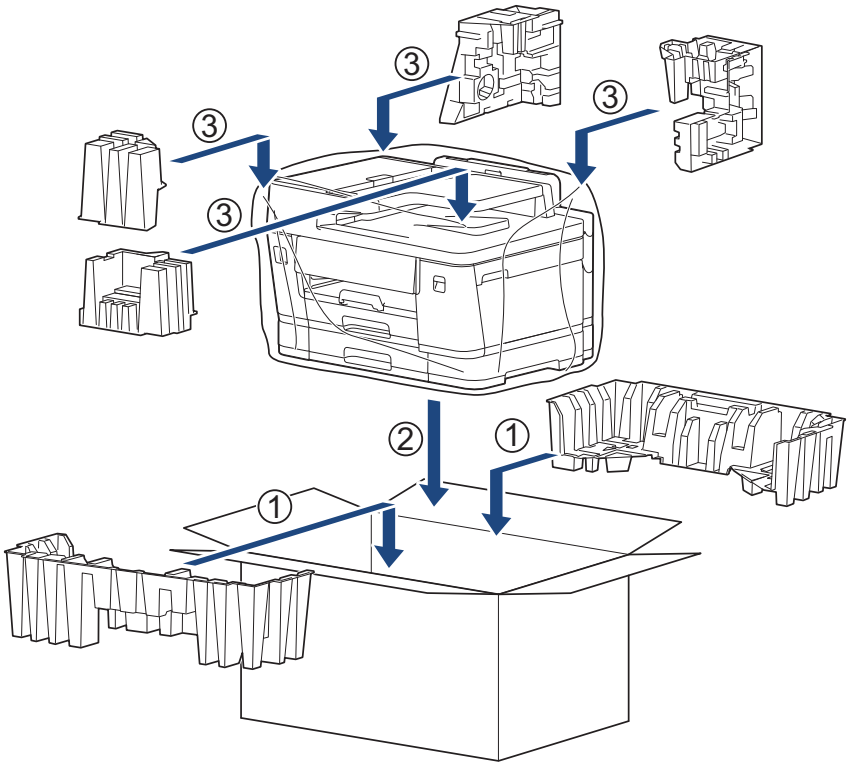

10. Close the carton and tape it shut.

Related Information

- Routine Maintenance

Related Topics:

- Replace the Ink Cartridges

Machine Settings

Customise settings and features to make your machine a more efficient work tool.

- Check Your Machine's Password
- Change Machine Settings from the Control Panel
- Change Machine Settings Using Web Based Management

Check Your Machine's Password

If prompted to enter a password, check the following information:

>> Find the Default Password
>> Change the Password
>> Reset the Password

Find the Default Password

The default password to manage this machine's settings is located on the back of the machine and marked "**Pwd**".

Change the Password

We recommend immediately changing the default password to protect your machine from unauthorised access.

Use Web Based Management to change the password.
For more information, see *Related Information*.

Reset the Password

If you forget your password, reset your machine to its factory default settings. The password will also be reset to the default password.

For more information, see *Related Information*.

Related Information

- Machine Settings

Related Topics:

- Change the Login Password Using Web Based Management
- Update Your Machine's Firmware
- Reset Your Machine

Change Machine Settings from the Control Panel

- In the Event of Power Failure (Memory Storage)
- General Settings
- Save Your Favourite Settings as a Shortcut
- Print Reports
- Settings and Features Tables

In the Event of Power Failure (Memory Storage)

- Your menu settings are stored permanently and will not be lost.
- Temporary settings (for example: Contrast and Overseas Mode) are lost.
- The date and time and programmed fax timer jobs (for example: Delayed Fax) are lost.
- Other fax jobs in the machine's memory will not be lost.

Related Information

- Change Machine Settings from the Control Panel

General Settings

- Set the Date and Time
- Adjust the Machine Volume
- Set Sleep Mode Countdown
- Set the Machine to Power Off Automatically
- Reduce Printing Noise
- Change the Language Displayed on the LCD

Set the Date and Time

The LCD displays the date and time. If they are not current, re-enter them. You can add the date and time to each fax you send by setting your Station ID.

1. Press [Settings].
2. Press [Date & Time].
3. Press [Date].
4. Enter the last two digits of the year on the touchscreen, and then press [OK].
5. Enter two digits for the month on the touchscreen, and then press [OK].
6. Enter two digits for the day on the touchscreen, and then press [OK].
7. Press [Time].
8. Enter the time (in 24-hour format) using the touchscreen.

   Press [OK].

   (For example, enter 19:45 for 7:45 PM.)
9. Press .

Related Information

- General Settings

Related Topics:

- Set Your Station ID

Adjust the Machine Volume

1. Press [Settings] > [All Settings] > [General Setup] > [Volume].
2. Press one of the following options:

Option	Description
Ring	Adjust the ring volume.
Beep	Adjust the volume when you press a button, make a mistake, or after you send or receive a fax.
Speaker	Adjust the speaker volume.

3. Press ▲ or ▼ to display the [Off], [Low], [Med], or [High] option, and then press the option you want.
4. Press .

Related Information

- General Settings

Set Sleep Mode Countdown

The Sleep Mode (or Power Save Mode) setting can reduce power consumption. When the machine is in Sleep Mode, it acts as though it is turned off. The machine will wake up and start printing when it receives a print job or a fax. Use these instructions to set a time delay (countdown) before the machine enters Sleep Mode.

- The timer will restart if any operation is carried out on the machine, such as receiving a fax or a print job.
- The factory setting is one minute.

1. Press [Settings] > [All Settings] > [General Setup] > [Ecology] > [Sleep Time].
2. Enter the number of minutes (1-60) you want to set on the touchscreen, and then press [OK].
3. Press .

When the machine goes into Sleep Mode, the LCD backlight turns off.

Related Information

- General Settings

Related Topics:

- Set the Machine to Power Off Automatically

Set the Machine to Power Off Automatically

The Auto Power Off feature can reduce power consumption. If the machine does not receive any jobs for a certain length of time, based on your model and settings, the machine will automatically enter Power Off Mode. The machine will not go into Power Off Mode if it is connected to a network, a USB cable, NFC, Wi-Fi Direct, or a telephone line, or if there is any secure print data stored in its memory. The available features and interfaces vary depending on the model.

To turn on the machine after the Auto Power Off feature has turned it Off, press .

1. Press [Settings] > [All Settings] > [General Setup] > [Ecology] > [Auto Power Off].
2. Press ▲ or ▼ to display the [Off], [20 minutes], [1 hour], [2 hours], [4 hours], or [8 hours] option, and then press the option you want.
3. Press .

Related Information

- General Settings

Related Topics:

- Set the Fax Journal's Interval Period
- Set Sleep Mode Countdown

Reduce Printing Noise

The Quiet Mode setting can reduce printing noise. When Quiet Mode is turned on, the print speed becomes slower.

The factory setting is [Off].

When the Quiet Mode setting is turned on, appears on the Home screen.

1. Press [Settings] > [All Settings] > [General Setup] > [Ecology] > [Quiet Mode].
2. Press [On] or [Off].
3. Press .

Related Information

- General Settings

Related Topics:

- Touchscreen LCD Overview

Change the Language Displayed on the LCD

Change the LCD language if needed.

This feature is not available in some countries.

1. Press [Settings] > [All Settings] > [Initial Setup] > [Local Language].
2. Press your language.
3. Press .

Related Information

- General Settings

Save Your Favourite Settings as a Shortcut

- Add Shortcuts
- Change or Delete Shortcuts
- Assign a Shortcut to an IC Card

Add Shortcuts

You can add the settings you use most frequently for functions such as Copy and Scan by saving them as your Shortcuts. Later you can press the Shortcut to apply these settings instead of manually re-entering them.

Some Shortcut menus are not available depending on your model.

These instructions describe how to add a Copy Shortcut. The steps for adding Shortcuts for other functions are very similar.

1. If the Home screen appears, press + [Shortcuts].
2. Press a tab from [1] to [3].
3. Press + where you have not added a Shortcut.
4. Press ▲ or ▼ to display [Copy].
5. Press [Copy].
6. Press [Options].
7. Press ▲ or ▼ to display the available settings, and then press the setting you want to change.
8. Press ▲ or ▼ to display the available options for the setting, and then press the option you want.

   Repeat the previous and this steps until you have selected all the settings for this Shortcut. When finished, press [OK].
9. Press [OK].
10. Read and confirm the displayed list of settings you have selected, and then press [OK].
11. Enter a name for the Shortcut using the LCD, and then press [OK].

- When adding Fax or Scan to Shortcuts, you will be asked if you want to make this a One Touch Shortcut. Follow the LCD instructions.
- When adding Copy to a One Touch Shortcut, you must select the [Colour Copy] or [Mono Copy] option in the shortcut.

  Press [Options] > [One Touch Shortcut], select [Colour Copy] or [Mono Copy], and then change other settings. Follow the LCD instructions.

Related Information

- Save Your Favourite Settings as a Shortcut

Change or Delete Shortcuts

You can change the settings in a Shortcut.

> You cannot change a Web Connect Shortcut or Apps Shortcut. If you need to change them, delete them, and then add a new Shortcut.

1. If the Home screen appears, press + [Shortcuts].
2. Press a tab from [1] to [3] to display the Shortcut you want to change.
3. Press and hold the Shortcut you want to change.
4. Press [Edit].

> To delete the Shortcut, press [Delete]. To edit the name of the Shortcut, press [Rename] and follow the LCD menus.

5. Press [Options].
6. Press ▲ or ▼ to display the available settings, and then press the setting you want to change.
7. Change the settings for the Shortcut you selected. Press [OK].
8. Press [OK] when you have finished changing the settings.
9. Press [OK] to confirm.

Related Information

- Save Your Favourite Settings as a Shortcut

Related Topics:

- Enter Text on Your Brother Machine
- Add Shortcuts

Assign a Shortcut to an IC Card

- Assign a Shortcut to an IC Card with NFC
- Assign a Shortcut to an IC Card with IC Card Reader

Assign a Shortcut to an IC Card with NFC

Related Models: MFC-J6975DW/MFC-J6977DW

You can assign one Shortcut to your IC card. When you touch your IC card to the machine's NFC symbol, your personal Shortcut automatically appears on the touchscreen.

- You cannot use the same IC card for different Shortcuts.
- To use the IC card for another Shortcut, unregister the card first, and then register it with the new Shortcut.

1. If the Home screen appears, press + [Shortcuts].
2. Press the tab that contains the Shortcut you want to assign to your IC card.
3. Press and hold the Shortcut until the options appear.
4. Press ▲ or ▼ to display the [Register Card/NFC] option, and then press it.
5. Touch the IC card to the NFC symbol.
6. Press [Register].

   The Shortcut is assigned to the IC Card.

Related Information

- Assign a Shortcut to an IC Card

Assign a Shortcut to an IC Card with IC Card Reader

You can assign one Shortcut to your IC card. When you touch your IC card to the IC card reader connected to your machine, your personal Shortcut automatically appears on the touchscreen.

- You cannot use the same IC card for different Shortcuts.
- To use the IC card for another Shortcut, unregister the card first, and then register it with the new Shortcut.

Before you assign a shortcut to an IC card, register an external IC card reader. Use Web Based Management to register the card reader. Your machine supports external IC card readers supporting HID-class drivers.

1. Start Web Based Management. See Access Web Based Management.
2. In the left navigation bar, click **Administrator** > **External Card Reader**.

If the left navigation bar is not visible, start navigating from ≡.

3. Enter the necessary information, and then click **Submit**.
4. Restart your Brother machine to activate the configuration.
5. Connect the card reader to your machine.

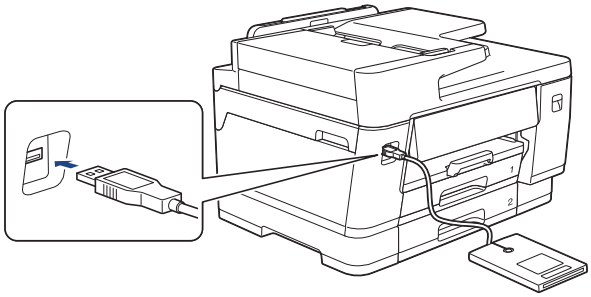

6. If the Home screen appears, press + [Shortcuts] on the LCD.
7. Press a tab from [1] to [3] to select the Shortcut screens that contains the Shortcut you want to assign to your IC card.
8. Press and hold the Shortcut until the options appear.
9. Press ▲ or ▼ to display the [Register Card/NFC] option, and then press it.
10. Touch the IC card to the IC card reader connected to your machine.
11. Press [Register].

    The Shortcut is assigned to the IC Card.

Related Information

- Assign a Shortcut to an IC Card

Related Topics:

- Access Web Based Management

Print Reports

- Reports Overview
- Print a Report
- Fax Reports

Reports Overview

The following reports are available:

Transmission Verify

The Transmission Verify prints a Transmission Verification Report for your last transmission.

Address Book

The Address Book report prints a list of names and numbers stored in the Address Book memory.

Fax Journal

The Fax Journal prints a list of information about your last 200 incoming and outgoing faxes. (TX means Transmit, RX means Receive.)

User Settings

The User Settings report prints a list of your current settings.

Network Configuration (network models)

The Network Configuration report prints a list of your current network settings.

Print File List (available for certain models)

The Print File List prints a list of the fonts and print macro setting stored in the machine.

WLAN Report (wireless models)

The WLAN Report prints the wireless LAN connectivity diagnosis.

Caller ID History

The Caller ID History report prints a list of the available Caller ID information for the last 30 received faxes and telephone calls.

Related Information

- Print Reports

Print a Report

1. Press [Settings] > [All Settings] > [Print Reports].
2. Press ▲ or ▼ to display the report options, and then press the option you want.
3. Press [Yes].
4. Press .

Related Information

- Print Reports

Settings and Features Tables

- Settings Tables (2.7"(67.5 mm)/3.5"(87.6 mm) Touchscreen models)
- Features Tables (2.7"(67.5 mm)/3.5"(87.6 mm) Touchscreen models)

Settings Tables (2.7"(67.5 mm)/3.5"(87.6 mm) Touchscreen models)

These tables will help you understand your machine's menu selections and options.

>> [Settings]
>> [General Setup]
>> [Shortcut Settings]
>> [Fax]
>> [Printer]
>> [Network]
>> [Print Reports]
>> [Machine Info.]
>> [Initial Setup]

[Settings]

[Settings]

Level 1	Level 2	Level 3	Descriptions
(Date & Time)	-	-	Access the Date and Time setting menus.
Maintenance	-	-	Access the Maintenance settings menus.
Network	Wired LAN	-	Access the Wired LAN setting menus.
	WLAN(Wi-Fi)	-	Access the WLAN setting menus.
	Wi-Fi Direct	-	Access the Wi-Fi Direct setting menus.
Tray Setting	-	-	Access the tray setting menus.
Fax Preview	-	-	View received faxes on the LCD.
Wi-Fi Direct	-	-	Access the Wi-Fi Direct setting menus.
All Settings	-	-	Configure the detailed settings.

[General Setup]

[All Settings] > [General Setup]

Level 3	Level 4	Level 5	Descriptions
Maintenance	Improve Print Quality	Check Print Quality	Check and correct the print quality, alignment and paper feeding according to the LCD instructions.
		Alignment	
		Correct Paper Feed	
	Print Head Cleaning	-	Clean the print head according to the LCD instructions.
	Remove Paper Scraps	-	Remove a piece of paper in the machine according to the LCD instructions.
	Ink Volume	-	Check the available ink volume.
	Ink Cartridge Model	-	Check your ink cartridge numbers.

Level 3	Level 4	Level 5	Descriptions
Maintenance	**Print Options**	**Reduce Smudging**	Reduce smudging on the paper or paper jams during printing.
		Reduce Uneven Lines	Reduce uneven lines on the paper during printing.
		Enhance Print	Improve print quality and reduce blurriness.
	Ink Cartridge Check	-	View your ink cartridge information.
	Print Quality Auto Check	-	Automatically detects the Print Head condition and cleans the Print Head when needed.
Paper Type (MFC-J3660DW/ MFC-J6560DW/ MFC-J6760DW)	-	-	Set the type of paper in the paper tray.
Paper Size (MFC-J3660DW/ MFC-J6560DW/ MFC-J6760DW)	-	-	Set the paper size in the paper tray.
Check Paper (MFC-J3660DW/ MFC-J6560DW/ MFC-J6760DW)	-	-	Check the paper type and paper size when you pull the tray out of the machine.
Tray Setting (MFC-J3960DW/ MFC-J6960DW/ MFC-J6975DW/ MFC-J6977DW)	**Tray 1**	**Paper Type**	Set the type of paper in Tray #1.
		Paper Size	Set the size of paper in Tray #1.
	Tray 2	**Paper Size**	Set the size of paper in Tray #2.
	Tray 3 (MFC-J6977DW)	**Paper Size**	Set the size of paper in Tray #3.
	MP Tray	**Paper Type**	Set the type of paper in the MP tray.
		Paper Size	Set the size of paper in the MP tray.
	Copy	**Select Tray**	Select the tray to be used for copying.
		Tray Priority	Change the tray priority for copying.
	Fax	**Select Tray**	Select the tray to be used for faxing.
		Tray Priority	Change the tray priority for faxing.
	Print	**Tray Priority**	Change the tray priority for printing from your computer.
	JPEG Print (Media)	**Select Tray**	Select the tray to be used for printing photos from a USB flash drive.
		Tray Priority	Change the tray priority for printing photos from a USB flash drive.
	Skip Tray (MFC-J6977DW)	-	Select a specific tray you do not want to use; if it is loaded with paper of the wrong size.
	Check Paper	-	Check the paper type and paper size when you pull the tray out of the machine or set the paper in the MP tray.
Volume	**Ring**	-	Adjust the ring volume.
	Beep	-	Adjust the beeper volume.
	Speaker	-	Adjust the speaker volume.

Level 3	Level 4	Level 5	Descriptions
LCD Settings	Backlight	-	Adjust the brightness of the LCD backlight.
	Dim Timer	-	Set how long the LCD backlight stays on after the last finger press.
Screen Settings	Home Screen	-	Set the screen that is displayed when you press .
	Scan Screen	-	Set the default Scan screen settings.
Notice Settings	Document Alert	-	Displays the alert when a document is left on the scanner glass.
	Copy Tip	-	Displays the document placement guidance when you open the document cover.
	Scan Result(Skip Blank Page)	-	Displays the Skip Blank Page scan results when finished.
Keyboard Settings	-	-	Select the type of keyboard for the LCD.
Ecology	Eco Mode	-	Turn the following machine settings on: • 2-sided Print: Long Edge [1] (supported models only) • Sleep Time: 1 Min • Dim Timer: 10 Secs • Quiet Mode: On [1]
	Sleep Time	-	Set how long the machine must be idle before it goes into Sleep Mode.
	Quiet Mode	-	Decrease printing noise.
	Auto Power Off	-	Select how long the machine must wait before it automatically enters Power Off Mode. When set to Off, the machine does not power off automatically.
Delete Storage (MFC-J6975DW/ MFC-J6977DW)	Macro ID	-	Delete the registered Macro data.
	Font ID	-	Delete the registered Font data.
	Delete All	-	Restore your machine's Macro and Font data to the factory settings.
A4/Letter Paper Orientation	-	-	Set the orientation for A4 or Letter size documents on the scanner glass.

1 Changing this setting is possible only after you change certain machine settings in Web Based Management.

[Shortcut Settings]

[All Settings] > [Shortcut Settings]

Level 3	Level 4	Descriptions
(Select a shortcut button.)	Rename	Change the shortcut name.
	Edit	Change the shortcut settings.
	Delete	Delete the shortcut.
	Register Card/NFC	Assign a Shortcut to an IC card.

Level 3	Level 4	Descriptions
(Select a shortcut button.)	Delete Card/NFC	Remove a Shortcut from an IC card.

[Fax]

[All Settings] > [Fax]

Level 3	Level 4	Level 5	Descriptions
Setup Receive	Ring Delay	-	Set the number of rings before the machine answers in Fax Only or Fax/Tel mode.
	Receive Mode	-	Select the Receive Mode that best suits your needs.
	F/T Ring Time	-	Set the length of the pseudo/double-ring time in Fax/Tel mode.
	Fax Preview	-	View received faxes on the LCD.
	Fax Detect	-	Receive fax messages automatically when you answer a call and hear fax tones.
	Remote Codes	-	Answer calls at an extension or external telephone and use codes to turn the Remote Codes on or off. You can personalise the codes.
	Auto Reduction	-	Reduce each page of an incoming fax to fit on your paper. The machine calculates the reduction ratio using the page size of the fax, and your Paper Size setting.
	PC Fax Receive	-	Set the machine to send faxes to your computer. You can turn on the Backup Print safety feature.
	Memory Receive	Off	-
		Fax Forward	Set the machine to forward fax messages or to store incoming faxes in the memory (so you can retrieve them while you are away from your machine). If you select Fax Forward, you can turn on the Backup Print safety feature.
		Fax Storage	
		Forward to Cloud	Forward incoming faxes to the online service.
		Forward to Network	Forward incoming faxes to a network destination.
	Fax Rx Stamp	-	Print the received time and date on the top of incoming faxes.
Report Setting	XMIT Report	-	Select the initial setup for the Transmission Verification Report.
	Journal Period	-	Set the interval for automatic printing of the Fax Journal. If you select an option other than Off and Every 50 Faxes, you can set the time for the option. If you select Every 7 Days, you can set the day of the week.
Print Document	-	-	Print incoming faxes stored in the machine's memory. All faxes are erased from the machine's memory after printing.
Remote Access	-	-	Set your own code for Remote Retrieval.
Dial Restriction	Dial Pad	-	Prevent dialing the wrong number by mistake or restrict dialling when using the method you selected.
	Address Book	-	
	Shortcuts	-	

Level 3	Level 4	Level 5	Descriptions
Dial Restriction	LDAP Server	-	Prevent dialing the wrong number by mistake or restrict dialling when using the method you selected.
Remaining Jobs	-	-	Check which scheduled jobs are in the machine's memory and cancel selected jobs.
Miscellaneous	BT Call Sign (U.K. only)	-	Use with BT Call Sign.
	Caller ID (U.K. and Ireland only)	-	View or print a list of the last 30 Caller IDs stored in the memory.

[Printer]

[All Settings] > [Printer]

(MFC-J6975DW/MFC-J6977DW)

Level 3	Level 4	Level 5	Descriptions
Emulation	-	-	Select the emulation mode.
Quality	-	-	Select the print quality.
Print Options	Font List	HP LaserJet	Print a list of the machine’s internal fonts.
		BR-Script 3	
	Test Print	-	Print a test page.
2-sided	2-sided Print	-	Enable or disable 2-sided printing and choose long edge or short edge.
Output Colour	-	-	Set the output colour.
Paper Type	-	-	Set the paper type.
Paper Size	-	-	Set the paper size.
Orientation	-	-	Set pages to print in either portrait or landscape orientation.
Auto FF	-	-	Allow the machine to print any remaining data automatically.
HP LaserJet	Font No.	Font No.	Configure HP LaserJet mode. (Available options depend on the fonts installed on your machine.)
		Soft Font No.	
	Font Pitch	-	
	Font Point	-	
	Symbol Set	-	
	Table Print	-	
	Auto LF	-	
	Auto CR	-	
	Auto WRAP	-	
	Auto SKIP	-	
	Left Margin	-	
	Right Margin	-	
	Top Margin	-	
	Bottom Margin	-	
	Lines	-	
	Tray Command	-	

Level 3	Level 4	Level 5	Descriptions
BR-Script 3	Error Print	-	Choose whether the machine prints the error information when errors occur.
PDF	Multiple Page	-	Set the page layout when printing multiple pages.
	PDF Print Options	-	Set the PDF Print setting to print either comments (Markup) or stamps in the PDF file, along with the text.
	PDF Fit to Page	-	Select if the machine scales or resizes the pages in the PDF file to fit the selected paper size.
Reset Printer	-	-	Restore the machine settings to the factory settings.

[Network]

[All Settings] > [Network]

Level 3	Level 4	Level 5	Level 6	Descriptions
Wired LAN	TCP/IP	BOOT Method	-	Select the Boot method that best suits your needs.
		IP Address	-	Enter the IP address.
		Subnet Mask	-	Enter the Subnet mask.
		Gateway	-	Enter the Gateway address.
		Node Name	-	Enter the Node name.
		WINS Configuration	-	Select the WINS configuration mode.
		WINS Server	-	Specify the IP address of the primary or secondary WINS server.
		DNS Server	-	Specify the IP address of the primary or secondary DNS server.
		APIPA	-	Set the machine to allocate the IP address from the link-local address range automatically.
		IPv6	-	Turn the IPv6 protocol on or off.
	Ethernet	-	-	Select the Ethernet link mode.
	Wired Status	-	-	View the current wired status.
	MAC Address	-	-	View the machine's MAC address.
	Set to Default	-	-	Restore the wired network settings to the factory settings.
	Wired Enable	-	-	Turn the Wired LAN interface on or off manually.
WLAN(Wi-Fi)	Find Wi-Fi Network	-	-	Configure your wireless network settings manually.
	Setup Support	-	-	Configure your wireless network settings according to the information displayed on the LCD.

Level 3	Level 4	Level 5	Level 6	Descriptions
WLAN(Wi-Fi)	WPS/Push Button	-	-	Configure your wireless network settings using the one-button push method.
	WPS/PIN Code	-	-	Configure your wireless network settings using WPS with a PIN.
	Recover WLAN	-	-	Reset and restart your wireless network.
	WLAN Status	Status	-	View the current wireless network status.
		Signal	-	View the current wireless network signal strength.
		SSID	-	View the current SSID.
		Comm. Mode	-	View the current Communication mode.
	TCP/IP	BOOT Method	-	Select the Boot method that best suits your needs.
		IP Address	-	Enter the IP address.
		Subnet Mask	-	Enter the Subnet mask.
		Gateway	-	Enter the Gateway address.
		Node Name	-	Enter the Node name.
		WINS Configuration	-	Select the WINS configuration mode.
		WINS Server	-	Specify the IP address of the primary or secondary WINS server.
		DNS Server	-	Specify the IP address of the primary or secondary DNS server.
		APIPA	-	Set the machine to allocate the IP address from the link-local address range automatically.
		IPv6	-	Turn the IPv6 protocol on or off.
	MAC Address	-	-	View the machine's MAC address.
	Set to Default	-	-	Restore the wireless network settings to the factory settings.
	WLAN Enable	-	-	Turn the wireless network connection On or Off.
Wi-Fi Direct	Manual	-	-	Configure your Wi-Fi Direct network settings manually.
	Group Owner	-	-	Set your machine as the Group Owner.
	Push Button	-	-	Configure your Wi-Fi Direct network settings using the one-button push method.

Level 3	Level 4	Level 5	Level 6	Descriptions
Wi-Fi Direct	PIN Code	-	-	Configure your Wi-Fi Direct network settings using WPS with a PIN code.
	Device Information	Device Name	-	View your machine's device name.
		SSID	-	View the Group Owner's SSID. When the machine is not connected, the LCD displays Not Connected.
		IP Address	-	View your machine's current IP Address.
	Status Information	Status	-	View the current Wi-Fi Direct network status.
		Signal	-	View the current Wi-Fi Direct network signal strength. When your machine acts as Group Owner, the LCD always indicates a strong signal.
	I/F Enable	-	-	Turn the Wi-Fi Direct connection on or off.
NFC (MFC-J6975DW/ MFC-J6977DW)	-	-	-	Turn the NFC function on or off.
E-mail/IFAX	Mail Address	-	-	Enter the email address. (Up to 60 characters)
	Setup Server	SMTP	Server	Enter the SMTP server name and address.
			Port	Enter the SMTP port number.
			Auth. for SMTP	Select the Security method for email notification.
			SSL/TLS	Send or receive an email via an email server that requires secure SSL/TLS communication.
			Verify Certification	Verify the SMTP Server Certificate automatically.
		POP3/IMAP4	Protocol	Select the protocol for receiving an email from the server.
			Server	Enter the server name and address.
			Port	Enter the port number.
			Mailbox Name	Enter the mailbox name. (Up to 60 characters)
			Mailbox Password	Enter the password to log into the server. (Up to 128 characters)

Level 3	Level 4	Level 5	Level 6	Descriptions
E-mail/IFAX	Setup Server	POP3/IMAP4	Select Folder	Select the specified folder in the mailbox using the IMAP4 protocol.
			SSL/TLS	Send or receive an email via an email server that requires secure SSL/TLS communication.
			Verify Certification	Verify the Server Certificate automatically.
			Auth. for POP3/IMAP4	Select the Security method for email notification.
	Setup Mail RX	Auto Polling	Auto Polling	Automatically check the server for new messages.
			Poll Frequency	Set the interval for checking new messages on the server.
		Header	-	Select the contents of the email header to be printed.
		Del/Read Error Mail	-	Set the machine to automatically delete error mails.
		Notification	-	Receive notification messages.
	Setup Mail TX	Size Limit	Size Limit	Limit the size of email documents.
			Maximum Size(MB)	
		Notification	-	Send notification messages.
	Setup Relay	Relay Broadcast	-	Relay a document to another fax machine.
		Relay Domain	-	Register the Domain name.
		Relay Report	-	Print the relay Broadcast Report.
	Manual Receive	-	-	Manually check the POP3 or IMAP4 server for new messages.
Message from Brother	Message from Brother	-	-	Display messages and notifications from Brother.
	Status	-	-	
Web Connect Settings	Proxy Settings	Proxy Connection	-	Change the Web connection settings.
		Address	-	
		Port	-	
		User Name	-	
		Password	-	
Web Based Mgmt	-	-	-	Enable or disable Web Based Management. If you enable this function, make sure you specify the connection method to use Web Based Management.

Level 3	Level 4	Level 5	Level 6	Descriptions
IPsec	-	-	-	IPsec is an optional security feature of the IP protocol that provides authentication and encryption services. We recommend contacting your network administrator before changing this setting.
IP Filter	-	-	-	Restrict access to your machine by enabling the IP filter.
Global Detect	Allow Detect	-	-	Enable or disable Global Detect, a function that detects and notifies the user when the user unintentionally connects to a global network.
	Reject Access	-	-	Disable connections to the global network.
Network Reset	-	-	-	Restore the machine's network settings back to the factory settings, except the administrator password.

[Print Reports]

[All Settings] > [Print Reports]

Level 3	Descriptions
XMIT Verify	Print a Transmission Verification Report for your last transmission.
Address Book	Print a list of recipients stored in the Address Book.
Fax Journal	Print a list of information about your last 200 incoming and outgoing faxes. (TX means Transmit. RX means Receive.)
User Settings	Print a list of your User settings.
Network Configuration	Print a list of your Network settings.
Print File List (MFC-J6975DW/MFC-J6977DW)	Print a list of data saved in the machine's memory.
WLAN Report	Print the wireless LAN connection results.
Caller ID History	Print a list of the available Caller ID information of the last 30 received faxes and telephone calls.

[Machine Info.]

[All Settings] > [Machine Info.]

Level 3	Level 4	Descriptions
Serial No.	-	Check your machine's serial number.
Firmware Version	Main Version	Check your machine's firmware version.
	Security Version	
Firmware Update	-	Update your machine to the latest firmware.
Firmware Update Setup	-	Set the days and times for automatic firmware updates.
Page Counter	-	Check the total number of pages the machine has printed.

[Initial Setup]

[All Settings] > [Initial Setup]

Level 3	Level 4	Descriptions
Date & Time	Date	Add the date and time on the screen and in the headings of the faxes you send.
	Time	
	Auto Daylight	Set the machine to change automatically for Daylight Saving Time.
	Time Zone	Set your time zone.
Station ID	Fax	Enter your name and fax number so it appears on each page you fax.
	Name	
Tone/Pulse (Available only for some countries.)	-	Select the dialling mode.
Fax Auto Redial	-	Set the machine to redial the last fax number if the fax did not go through because the line was busy. If the line is busy when you are sending a fax automatically, the machine redials up to three times at five-minute intervals.
Dial Tone	-	Shorten the dial tone detection pause.
Phone Line Set	-	Select the telephone line type.
Compatibility	-	Adjust the equalisation for transmission difficulties. VoIP service providers offer fax support using various standards. If you regularly experience fax transmission errors, select Basic (for VoIP).
Reset	Machine Reset	Restore all the machine's settings that you have changed, such as Date and Time.
	Network	Restore the machine's network settings back to the factory settings, except the administrator password.
	Address Book & Fax	Erase all stored phone numbers, fax data, and fax settings.
	Stored Fax Data	Erase all stored fax data and history.
	All Settings	Restore all the machine's settings back to the factory settings.
Local Language (Available only for some countries.)	-	Change your LCD language.

Related Information

- Settings and Features Tables

Features Tables (2.7"(67.5 mm)/3.5"(87.6 mm) Touchscreen models)

These tables will help you understand your machine's feature selections and temporary options.

>> [Copy]
>> [Scan]
>> [Fax]
>> [Secure Print]
>> [Web]
>> [Apps]
>> [USB]
>> [A3 Copy Shortcuts]
>> [Download Software]
>> [Print Head Cleaning]
>> [Shortcuts]
>> [Ink]
>> Wi-Fi Setup
>> When you have put a USB Flash drive in the USB slot

[Copy]

Level 3	Level 4	Level 5	Descriptions
Save as Shortcut	-	-	Save the current settings as a shortcut.
ID	-	-	Make an ID card copy.
Preview (MFC-J6975DW/ MFC-J6977DW)	-	-	Preview the copied result on the LCD before the machine starts printing.
Options	Quality	-	Select the Copy resolution for your document type.
	One Touch Shortcut	-	Select the Colour Copy or Mono Copy option when registering a One Touch Shortcut.
	Document Size	-	Select the document size option you want.
	Select Tray (MFC-J3960DW/MFC-J6960DW/ MFC-J6975DW/MFC-J6977DW)	-	Select the tray to be used for Copy mode.
	Paper Type	-	Select the paper type that matches the paper in the tray.
	Paper Size	-	Select the paper size that matches the paper in the tray.
	Enlarge/Reduce	100%	-
		Fit to Page	Adjust the copy size to fit on the paper size you have set.

Level 3	Level 4	Level 5	Descriptions
Options	Enlarge/Reduce	Enlarge	Select an enlargement ratio for the next copy.
		Reduce	Select a reduction ratio for the next copy.
		Custom(25-400 %)	Enter an enlargement or reduction ratio.
	Density	-	Adjust the density.
	Remove Background Colour	Black Copy Settings	Change the amount of background colour that is removed.
		Colour Copy Settings	
	2-sided Copy	-	Turn off or turn on 2-sided copying and select flip on long edge or flip on short edge.
	Stack/Sort	-	Select to stack or sort multiple copies.
	Page Layout	-	Make N in 1, 2 in 1 ID, 1 to 2, or Poster copies.
	Auto Deskew	-	Set the machine to correct a skewed copy.
	Advanced Settings	-	Select advanced copy settings.
	Preview (MFC-J6975DW/MFC-J6977DW)	-	Preview a copy result on the LCD, before the machine starts printing.
	Set New Default	-	Save your settings as the default.
	Factory Reset	-	Restore all settings back to the factory settings.

[Scan]

Level 3	Level 4	Level 5	Level 6	Descriptions
to Media (When a USB Flash drive is inserted)	Other Scan to Actions	-	-	Scan documents and save them directly to a USB flash drive without using a computer.
	Options	-	-	
	Save as Shortcut	-	-	
to My E-mail (MFC-J6975DW/ MFC-J6977DW)	-	-	-	Scan a monochrome or a colour document to your email address.
to My Folder (MFC-J6975DW/ MFC-J6977DW)	-	-	-	Send scanned data to your folder in the CIFS server on your local network or on the Internet.
to PC	to File	Other Scan to Actions	-	Scan documents and save them to a folder on your computer.
		(Select USB or PC)	Options	
			Save as Shortcut	
	to OCR	Other Scan to Actions	-	Convert your scanned document to an editable text file.

Level 3	Level 4	Level 5	Level 6	Descriptions
to PC	to OCR	(Select USB or PC)	Options	Convert your scanned document to an editable text file.
			Save as Shortcut	
	to Image	Other Scan to Actions	-	Scan photos or graphics into your graphics applications.
		(Select USB or PC)	Options	
			Save as Shortcut	
	to E-mail	Other Scan to Actions	-	Send a scanned document as an email attachment.
		(Select USB or PC)	Options	
			Save as Shortcut	
to E-mail Server	Other Scan to Actions	-	-	Send scanned data to an email server by allowing your machine to communicate with your network and email server.
	Manual	Next	Save as Shortcut	
			Preview (MFC-J6975DW/ MFC-J6977DW)	
			Options	
			Destinations	
		Add Address	-	
		Destinations	-	
	Address Book	Next	Save as Shortcut	
			Preview (MFC-J6975DW/ MFC-J6977DW)	
			Options	
			Destinations	
		Add Address	-	
		Destinations	-	
to FTP (MFC-J3660DW/ MFC-J3960DW/ MFC-J6560DW/ MFC-J6760DW/ MFC-J6960DW)	Other Scan to Actions	-	-	Scan documents directly to an FTP server.
	(Select Profile name)	Options	-	
		Save as Shortcut	-	
to FTP/SFTP (MFC-J6975DW/ MFC-J6977DW)	Other Scan to Actions	-	-	Send scanned data via FTP/ SFTP.
	(Select Profile name)	Preview	-	

Level 3	Level 4	Level 5	Level 6	Descriptions
to FTP/SFTP (MFC-J6975DW/ MFC-J6977DW)	(Select Profile name)	Options	-	Send scanned data via FTP/ SFTP.
		Save as Shortcut	-	
to Network	Other Scan to Actions	-	-	Scan documents directly to a CIFS server on your local network or on the Internet.
	(Select Profile name)	Preview (MFC-J6975DW/ MFC-J6977DW)	-	
		Options	-	
		Save as Shortcut	-	
to SharePoint (MFC-J6975DW/ MFC-J6977DW)	Other Scan to Actions	-	-	Send scanned data via a SharePoint server.
	(Select Profile name)	Preview	-	
		Options	-	
		Save as Shortcut	-	
to Web	-	-	-	Upload the scanned data to an Internet service.
WS Scan (Appears when you install a Web Services Scanner, which is displayed in your computer's Network explorer.)	Other Scan to Actions	-	-	Scan data using the Web Service protocol.
	Scan	-	-	
	Scan for E-mail	-	-	
	Scan for Fax	-	-	
	Scan for Print	-	-	

[Fax]

(When [Fax Preview] is [Off])

Level 3	Level 4	Level 5	Descriptions
Pause	-	-	When you are entering a fax or telephone number on the control panel, Pause appears on the LCD. Press Pause when you need a delay while dialling numbers, such as access codes and credit card numbers. You can also store a pause when you set up addresses.
Tel / R	-	-	Tel changes to R when PBX is selected as the telephone line type. You can use R to gain access to an outside line or to transfer a call to another extension when connected to a PBX.
Call History	Redial	-	Redial the last number you dialled.
	Outgoing Call	Apply	Select a number from the Outgoing Call history, and then send a fax to it, add it to the Address Book, or delete it.
		Edit	

Level 3	Level 4	Level 5	Descriptions
Call History	Caller ID History	Apply	Select a number from the Caller ID History and then send a fax to it, add it to the Address Book, or delete it.
		Edit	
Address Book	(Search:)	-	When LDAP is off, the search is within the Local Address Book. When LDAP is on, the search is within the Local Address Book and LDAP Server.
		Detail (Appears only when LDAP is on.)	View detailed information about the selected address.
	Edit	-	Store Address Book numbers, set up Group numbers for Broadcasting, and change and delete Address Book numbers.
	(Select Address Book)	Apply	Start sending a fax using the Address Book.
Options	Fax Resolution	-	Set the resolution for outgoing faxes.
	Contrast	-	Adjust the contrast.
	2-sided Fax (MFC-J3960DW/ MFC-J6760DW/ MFC-J6960DW/ MFC-J6975DW/ MFC-J6977DW)	-	Set the 2-sided scanning format.
	Document Size	-	Set the document size for outgoing faxes.
	Scan Long Paper	-	Scan a long document using the ADF.
	Sender Subject	-	Edit the subject of an outgoing fax.
	Broadcasting	Add Number	Send the same fax message to more than one fax number.
	Preview	-	Preview a fax message before you send it.
	Colour Setting	-	Set whether faxes are sent in monochrome or colour.
	Delayed Fax	Delayed Fax	Set the time of day the delayed faxes will be sent.
		Set Time	
	Batch TX	-	Combine delayed faxes to the same fax number at the same time of day into one transmission.
	Real Time TX	-	Send a fax without using the memory.
	Overseas Mode	-	Set to On if you have difficulty sending faxes overseas.
	Call History	Redial	Redial the last number you dialled.
		Outgoing Call	Select a number from the Outgoing Call history, and then send a fax to it, add it to the Address Book, or delete it.
		Caller ID History	Select a number from the Caller ID History and then send a fax to it, add it to the Address Book, or delete it.
	Address Book	(Search:)	When LDAP is off, the search is within the Local Address Book. When LDAP is on, the search is within the Local Address Book and LDAP Server.

Level 3	Level 4	Level 5	Descriptions
Options	Address Book	Edit	Store Address Book numbers, set up Group numbers for Broadcasting, and change and delete Address Book numbers.
	Set New Default	-	Save your settings as the default.
	Factory Reset	-	Restore all settings back to the factory settings.
Save as Shortcut	-	-	Save the current settings as a shortcut.

(When [Fax Preview] is [On])

Level 3	Level 4	Level 5	Level 6	Descriptions
Sending Faxes	Pause	-	-	When you are entering a fax or telephone number on the control panel, Pause appears on the LCD. Press Pause when you need a delay while dialling numbers, such as access codes and credit card numbers. You can also store a pause when you set up addresses.
	Tel / R	-	-	Tel changes to R when PBX is selected as the telephone line type. You can use R to gain access to an outside line or to transfer a call to another extension when connected to a PBX.
	Call History	Redial	-	Redial the last number you dialled.
		Outgoing Call	Apply	Select a number from the Outgoing Call history, and then send a fax to it, add it to the Address Book, or delete it.
			Edit	
		Caller ID History	Apply	Select a number from the Caller ID History and then send a fax to it, add it to the Address Book, or delete it.
			Edit	
	Address Book	(Search:)	-	When LDAP is off, the search is within the Local Address Book. When LDAP is on, the search is within the Local Address Book and LDAP Server.
			Detail (Appears only when LDAP is on.)	View detailed information about the selected address.
		Edit	-	Store Address Book numbers, set up Group numbers for Broadcasting, and change and delete Address Book numbers.
		(Select Address Book)	Apply	Start sending a fax using the Address Book.
	Options	Fax Resolution	-	Set the resolution for outgoing faxes.
		Contrast	-	Adjust the contrast.

Level 3	Level 4	Level 5	Level 6	Descriptions
Sending Faxes	Options	2-sided Fax (MFC-J3960DW/ MFC-J6760DW/ MFC-J6960DW/ MFC-J6975DW/ MFC-J6977DW)	-	Set the 2-sided scanning format.
		Document Size	-	Set the document size for outgoing faxes.
		Scan Long Paper	-	Scan a long document using the ADF.
		Sender Subject	-	Edit the subject of an outgoing fax.
		Broadcasting	Add Number	Send the same fax message to more than one fax number.
		Preview	-	Preview a fax message before you send it.
		Colour Setting	-	Set whether faxes are sent in monochrome or colour.
		Delayed Fax	Delayed Fax	Set the time of day the delayed faxes will be sent.
			Set Time	
		Batch TX	-	Combine delayed faxes to the same fax number at the same time of day into one transmission.
		Real Time TX	-	Send a fax without using the memory.
		Overseas Mode	-	Set to On if you have difficulty sending faxes overseas.
		Call History	Redial	Redial the last number you dialled.
			Outgoing Call	Select a number from the Outgoing Call history, and then send a fax to it, add it to the Address Book, or delete it.
			Caller ID History	Select a number from the Caller ID History and then send a fax to it, add it to the Address Book, or delete it.
		Address Book	(Search:)	When LDAP is off, the search is within the Local Address Book. When LDAP is on, the search is within the Local Address Book and LDAP Server.
			Edit	Store Address Book numbers, set up Group numbers for Broadcasting, and change and delete Address Book numbers.
		Set New Default	-	Save your settings as the default.
		Factory Reset	-	Restore all settings back to the factory settings.
	Save as Shortcut	-	-	Save the current settings as a shortcut.
Received Faxes	Print/Delete	Print All(New Faxes)	-	Print the new received faxes.

Level 3	Level 4	Level 5	Level 6	Descriptions
Received Faxes	Print/Delete	Print All(Old Faxes)	-	Print the old received faxes.
		Delete All(New Faxes)	-	Delete the new received faxes.
		Delete All(Old Faxes)	-	Delete the old received faxes.
Address Book	(Search:)	-	-	When LDAP is off, the search is within the Local Address Book. When LDAP is on, the search is within the Local Address Book and LDAP Server.
		Detail (Appears only when LDAP is on.)	-	View detailed information about the selected address.
	Edit	-	-	Store Address Book numbers, set up Group numbers for Broadcasting, and change and delete Address Book numbers.
	(Select Address Book)	Apply	-	Start sending a fax using the Address Book.
Call History	Redial	-	-	Redial the last number you dialled.
	Outgoing Call	Apply	-	Select a number from the Outgoing Call history, and then send a fax to it, add it to the Address Book, or delete it.
		Edit	-	
	Caller ID History	Apply	-	Select a number from the Caller ID History and then send a fax to it, add it to the Address Book, or delete it.
		Edit	-	

[Secure Print]

(MFC-J6975DW/MFC-J6977DW)

Level 1	Level 2	Level 3	Descriptions
Secure Print	(Select User)	-	You can print data saved in the machine's memory when you enter your four-digit password. Active only when the machine has secure print data.

[Web]

Level 1	Descriptions
Web	Connect the Brother machine to an Internet service.

[Apps]

Level 1	Descriptions
Apps	Connect the Brother machine to the Brother Apps service.

[USB]

Level 3	Level 4	Level 5	Level 6	Descriptions
PDF Print (MFC-J6975DW/ MFC-J6977DW)	(Select a PDF file.)	Print Settings	-	Print a PDF file directly from a USB flash drive.
JPEG Print	Select Files	OK	Print Settings	Adjust your photos with the options.
		Print All	-	Print all photos in your USB flash drive.
	Index Print	Print Index Sheet	Print Settings	Print a thumbnail page.
		Print Photos	Print Settings	Print photos by choosing the index numbers.
Scan to Media	-	-	-	Scan documents into a USB flash drive.
Web	-	-	-	Connect the Brother machine to an Internet service.

[A3 Copy Shortcuts]

Level 2	Level 3	Level 4	Descriptions
A3 2in1 A3 A4⇒A3 A3⇒A4 A4 + Note(L) A4 + Note(P) A4 + Grid A4 + Blank A4 Centre	Options	Quality	Select the Copy resolution for your document type.
		Document Size	Select the document size option you want.
		Select Tray (MFC-J3960DW/ MFC-J6960DW/ MFC-J6975DW/ MFC-J6977DW)	The machine automatically selects the tray that contains the most appropriate paper.
		Paper Type	View the available paper type.
		Paper Size	Set the size of paper in the paper tray.
		Density	Adjust the density.
		Auto Deskew	Set the machine to correct a skewed copy.

[Download Software]

Level 1	Descriptions
Download Software	Displays information about downloading and installing software for mobile devices and computers.

[Print Head Cleaning]

Level 1	Descriptions
Print Head Cleaning	Clean the print head according to the LCD instructions.

[Shortcuts]

Level 2	Level 3	Level 4	Descriptions
Add Shortcut	Copy	-	Change the settings in the Copy options.
	Fax	-	Change the settings in the Fax options.
	Scan	to Media	Scan documents and save them directly to a USB flash drive without using a computer.
		to PC(File)	Scan documents and save them to a folder on your computer.
		to PC(OCR)	Convert your scanned document to an editable text file.
		to PC(Image)	Scan photos or graphics into your graphics applications.
		to PC(E-mail)	Send a scanned document as an email attachment.
		to E-mail Server	Scan a monochrome or a colour document to your email server.
		to Network	Send scanned data to a CIFS server on your local network or on the Internet.
		to FTP (MFC-J3660DW/ MFC-J3960DW/ MFC-J6560DW/ MFC-J6760DW/ MFC-J6960DW)	Send scanned data via FTP.
		to FTP/SFTP (MFC-J6975DW/ MFC-J6977DW)	Send scanned data via FTP/SFTP.
		to SharePoint (MFC-J6975DW/ MFC-J6977DW)	Send scanned data via a SharePoint server.
	Web	-	Connect the Brother machine to an Internet service.
	Apps	-	Connect the Brother machine to the Brother Apps service.
This list appears when each Shortcut icon is pressed for 2 seconds.	Rename	-	Change the shortcut name.
	Edit	-	Change the shortcut settings.
	Delete	-	Delete the shortcut.
	Register Card/NFC	-	Assign a Shortcut to an IC card.
	Delete Card/NFC	-	Remove a Shortcut from an IC card.
Edit/Delete	(Select shortcut button.)	Rename	Change the shortcut name.
		Edit	Change the shortcut settings.
		Delete	Delete the shortcut.
		Register Card/NFC	Assign a Shortcut to an IC card.
		Delete Card/NFC	Remove a Shortcut from an IC card.

[Ink]

Level 2	Level 3	Descriptions
Ink Volume	-	Check the available ink volume.
Ink Cartridge Model	-	Check your ink cartridge numbers.
Improve Print Quality	Check Print Quality	Check and correct the print quality, alignment and paper feeding according to the LCD instructions.
	Alignment	
	Correct Paper Feed	
Print Head Cleaning	-	Clean the print head according to the LCD instructions.
Remove Paper Scraps	-	Remove a piece of paper in the machine according to the LCD instructions.
Print Options	Reduce Smudging	Reduce smudging on the paper or paper jams during printing.
	Reduce Uneven Lines	Reduce uneven lines on the paper during printing.
	Enhance Print	Improve print quality and reduce blurriness.
Ink Cartridge Check	-	View your ink cartridge information.
Print Quality Auto Check	-	Automatically detects the Print Head condition and cleans the Print Head when needed.

Wi-Fi Setup

Level 2	Descriptions
Find Wi-Fi Network	Configure your wireless network settings manually.
Setup Support	Configure your wireless network settings according to the information displayed on the LCD.
WPS/Push Button	Configure your wireless network settings using the one-button push method.
Recover WLAN	Reset and restart your wireless network.

When you have put a USB Flash drive in the USB slot

Level 1	Descriptions
PDF Print (MFC-J6975DW/MFC-J6977DW)	Print a PDF file directly from a USB flash drive.
JPEG Print	Select photo menu.
Scan to Media	Scan documents into a USB flash drive.
Web	Connect the Brother machine to an Internet service.

Related Information

- Settings and Features Tables

Change Machine Settings Using Web Based Management

Web Based Management is a utility that uses a standard web browser to manage your machine using the Hyper Text Transfer Protocol (HTTP) or Hyper Text Transfer Protocol over Secure Socket Layer (HTTPS).

- What is Web Based Management?
- Access Web Based Management
- Change the Login Password Using Web Based Management
- Set Up Your Machine's Address Book Using Web Based Management

What is Web Based Management?

Web Based Management is a utility that uses a standard web browser to manage your machine using the Hyper Text Transfer Protocol (HTTP) or Hyper Text Transfer Protocol over Secure Socket Layer (HTTPS).

- We recommend using the latest version of the following web browsers:
  - Microsoft Edge, Firefox, and Google Chrome™ for Windows
  - Safari, Firefox, and Google Chrome™ for Mac
  - Google Chrome™ for Android™
  - Safari and Google Chrome™ for iOS
- Ensure that JavaScript and Cookies are always enabled, regardless of which browser you use.
- Make sure your machine is On and connected to the same network as your computer, and that your network supports the TCP/IP protocol.

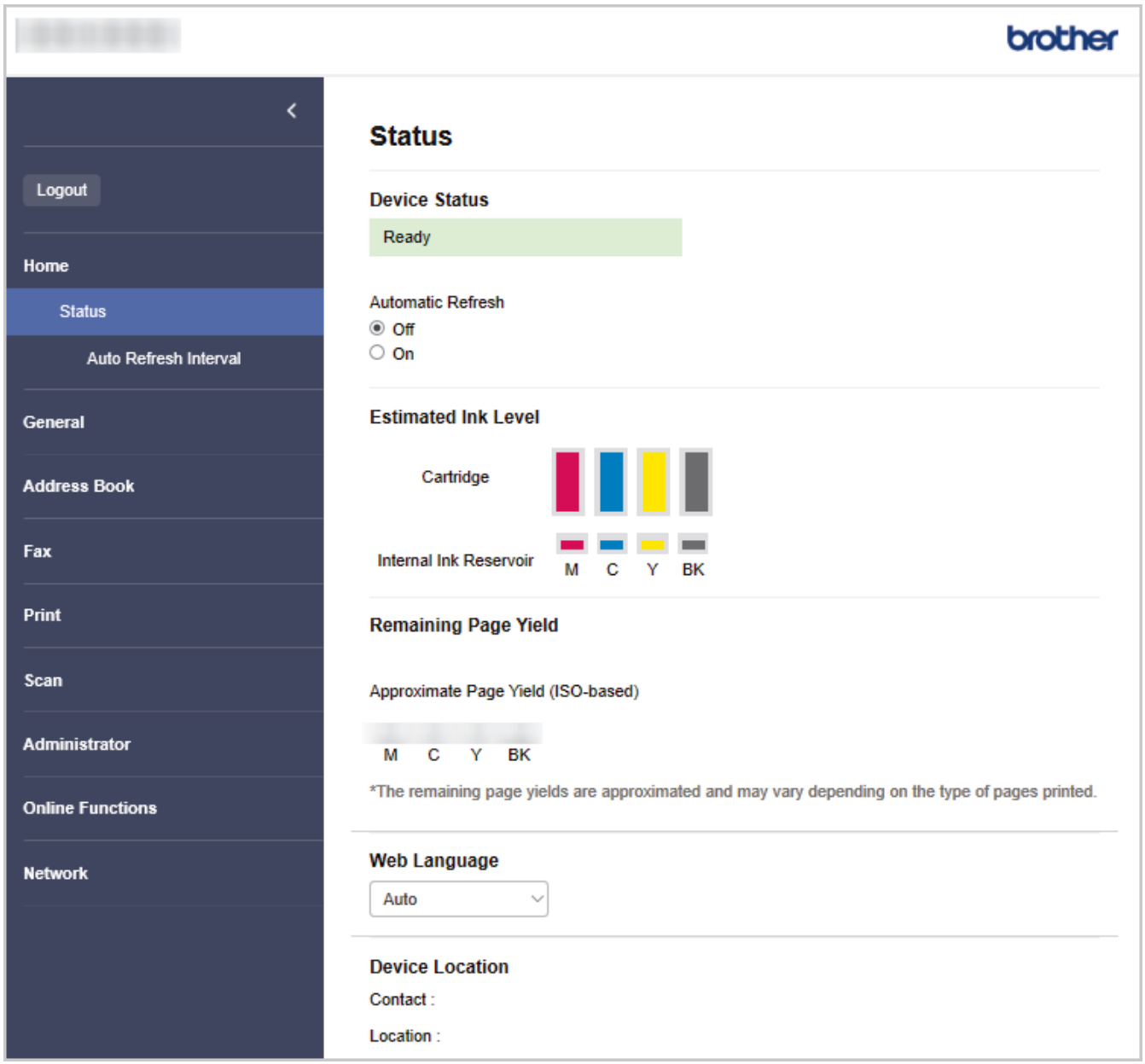

The actual screen may differ from the screen shown above.

Related Information

- Change Machine Settings Using Web Based Management

Access Web Based Management

- We recommend using the latest version of the following web browsers:
  - Microsoft Edge, Firefox, and Google Chrome™ for Windows
  - Safari, Firefox, and Google Chrome™ for Mac
  - Google Chrome™ for Android™
  - Safari and Google Chrome™ for iOS
- Ensure that JavaScript and Cookies are always enabled, regardless of which browser you use.
- If you set a new password during initial setup, use the new password that you specified for your machine.
- If you have not set a new password, use the default password to manage this machine's settings. The default password is located on the back of the machine and marked "**Pwd**". You can also find the default password in the Network Configuration Report. We recommend immediately changing the default password to protect your machine from unauthorised access.
- If the password is entered incorrectly several times, you will not be able to log in for a while. The lockout settings can be changed in Web Based Management.
- Up to eight computers or mobile devices can be logged in to Web Based Management at the same time. If you log in a ninth device, the first device will be logged out.
- We recommend using the HTTPS security protocol when configuring settings using Web Based Management. If you use HTTP when configuring settings using Web Based Management, follow the screen prompts to switch to a secure HTTPS connection.
- When you use HTTPS for Web Based Management configuration, your browser will display a warning dialog box. To avoid displaying the warning dialog box, you can install a self-signed certificate to use SSL/TLS communication. For more detailed information, see the *Security Features Guide*.

>> Start from Your Web Browser
>> Start from Brother iPrint&Scan (Windows/Mac)
>> Start from Brother Utilities (Windows)
>> Start from Brother Mobile Connect

Start from Your Web Browser

1. Start your web browser.
2. Type "https://machine's IP address" in your browser's address bar (where "machine's IP address" is your machine's IP address).

   For example:

   https://192.168.1.2

   Your machine's IP address can be found in the Network Configuration Report.

   See Print the Network Configuration Report.

   - If you are using a Domain Name System or enable a NetBIOS name, you can type another name, such as "SharedPrinter" instead of the IP address.

     For example: https://SharedPrinter
   - If you enable a NetBIOS name, you can also use the node name.

     For example: https://brn123456abcdef
   - The NetBIOS name can be found in the Network Configuration Report.

   Web Based Management appears.
3. If required, type the password in the **Login** field, and then click **Login**.
4. If you want to pin the navigation bar to the left side of the screen, click ≡ and then click .

You can now change the machine settings.

If you change the protocol settings, you must restart the machine after clicking **Submit** to activate the configuration.

After configuring the settings, click **Logout**.

If the machine is idle for a specified amount of time, the user is automatically logged out. Change the logout settings in the **Web Based Management Logout Time** menu.

Start from Brother iPrint&Scan (Windows/Mac)

1. Start Brother iPrint&Scan.
   - Windows

     Double-click the (**Brother iPrint&Scan**) icon.
   - Mac

     In the **Finder** menu bar, click **Go** > **Applications**, and then double-click the iPrint&Scan icon.

   The Brother iPrint&Scan screen appears.
2. If your Brother machine is not selected, click the **Add Machine** / **Select your Machine** button, and then select your model's name from the list. Click **OK**.
3. Click the **Supplies/Machine Settings** button.

   If the **Supplies/Machine Settings** window appears, click the **All Settings** link.

   Web Based Management appears.
4. If required, type the password in the **Login** field, and then click **Login**.
5. If you want to pin the navigation bar to the left side of the screen, click ≡ and then click .

You can now change the machine settings.

If you change the protocol settings, you must restart the machine after clicking **Submit** to activate the configuration.

After configuring the settings, click **Logout**.

If the machine is idle for a specified amount of time, the user is automatically logged out. Change the logout settings in the **Web Based Management Logout Time** menu.

Start from Brother Utilities (Windows)

1. Launch (**Brother Utilities**), and then click the drop-down list and select your model name (if not already selected).
2. Click **Tools** in the left navigation bar, and then click **Machine Settings**.

   Web Based Management appears.
3. If required, type the password in the **Login** field, and then click **Login**.
4. If you want to pin the navigation bar to the left side of the screen, click ≡ and then click .

You can now change the machine settings.

If you change the protocol settings, you must restart the machine after clicking **Submit** to activate the configuration.

After configuring the settings, click **Logout**.

If the machine is idle for a specified amount of time, the user is automatically logged out. Change the logout settings in the **Web Based Management Logout Time** menu.

Start from Brother Mobile Connect

Install and set up Brother Mobile Connect on your mobile device.

1. Start Brother Mobile Connect on your mobile device.
2. Tap your model name on the top of the screen.

If your Brother machine is not displayed on your mobile device, swipe to select your machine's model name.

3. Tap **All Machine Settings**.

   Web Based Management appears.
4. If required, type the password in the **Login** field, and then tap **Login**.
5. If you want to pin the navigation bar on the left side of the screen, tap ≡ and then tap .

You can now change the machine settings.

If you change the protocol settings, you must restart the machine after tapping **Submit** to activate the configuration.

After configuring the settings, tap **Logout**.

If the machine is idle for a specified amount of time, the user is automatically logged out. Change the logout settings in the **Web Based Management Logout Time** menu.

Related Information

- Change Machine Settings Using Web Based Management

Related Topics:

- Print the Network Configuration Report

Change the Login Password Using Web Based Management

The default password to manage this machine's settings is located on the back of the machine and marked "**Pwd**". Change the default password by following the on-screen instructions when you first log in. We recommend immediately changing the default password to protect your machine from unauthorised access.

1. Start Web Based Management. See Access Web Based Management.
2. In the left navigation bar, click **Administrator** > **Login Password**.

- The default password to manage this machine's settings is located on the back of the machine and marked "**Pwd**".
- If the left navigation bar is not visible, start navigating from ≡.

3. To change the password, type your current password in the **Enter Old Password** field.
4. Following the on-screen **Login Password** guidelines, type your new password in the **Enter New Password** field.
5. Retype the new password in the **Confirm New Password** field.
6. Click **Submit**.

You can also change the lockout settings in the **Login Password** menu.

Related Information

- Change Machine Settings Using Web Based Management

Related Topics:

- Check Your Machine's Password
- Access Web Based Management

Set Up Your Machine's Address Book Using Web Based Management

- We recommend using the HTTPS security protocol when configuring settings using Web Based Management.
- When you use HTTPS for Web Based Management configuration, your browser will display a warning dialog box.

1. Start Web Based Management. See Access Web Based Management.
2. In the left navigation bar, click **Address Book**.

If the left navigation bar is not visible, start navigating from ≡.

3. Click the target address numbers, and then add or update the Address Book information as needed.
4. Click **Submit**.

Related Information

- Change Machine Settings Using Web Based Management

Related Topics:

- Access Web Based Management

Appendix

- Specifications
- Supply Specifications
- Environmental and Compliance Information
- Brother Help and Customer Support

Specifications

>> General Specifications
>> Document Size Specifications
>> Print Media Specifications
>> Fax Specifications
>> Copy Specifications
>> USB Flash Drive Specifications
>> Scanner Specifications
>> Printer Specifications
>> Interface Specifications
>> Network Specifications
>> Computer Requirements Specifications

General Specifications

Printer Type		Inkjet
Print Head	**Mono**	Piezo with 420 nozzles x 1
	Colour	Piezo with 420 nozzles x 3
Memory Capacity		• MFC-J3660DW/MFC-J3960DW/MFC-J6560DW/MFC-J6760DW/MFC-J6960DW 512 MB • MFC-J6975DW/MFC-J6977DW 1 GB
LCD (liquid crystal display) [1]		• MFC-J3660DW/MFC-J6560DW/MFC-J6760DW 2.7 in. (67.5 mm) TFT Colour Touchscreen LCD • MFC-J3960DW/MFC-J6960DW/MFC-J6975DW/MFC-J6977DW 3.5 in. (87.6 mm) TFT Colour Touchscreen LCD
Power Source		AC 220 to 240 V 50/60 Hz
Power Consumption [2]		• MFC-J3660DW/MFC-J3960DW/MFC-J6560DW/MFC-J6760DW/MFC-J6960DW/MFC-J6975DW **Copying** [3]: Approx. 31 W **Ready** [4]: Approx. 5.5 W **Sleep** [4]: Approx. 0.9 W **Power Off** [4 5]: Approx. 0.03 W • MFC-J6977DW **Copying** [3]: Approx. 35 W **Ready** [4]: Approx. 6.0 W **Sleep** [4]: Approx. 0.9 W **Power Off** [4 5]: Approx. 0.03 W

Dimensions	• MFC-J3660DW/MFC-J6560DW/MFC-J6760DW 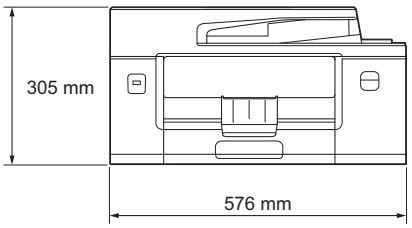 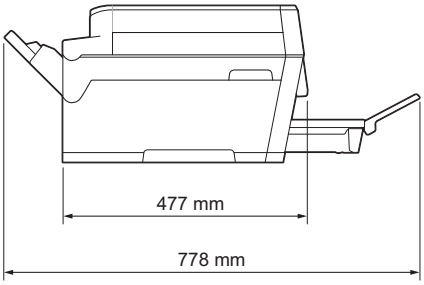 • MFC-J3960DW/MFC-J6960DW 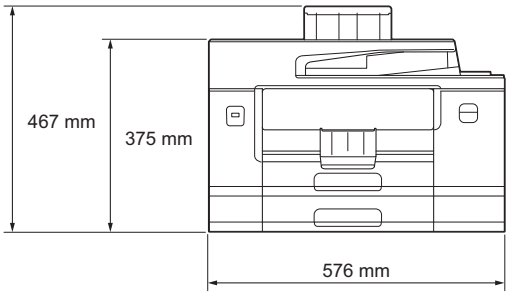 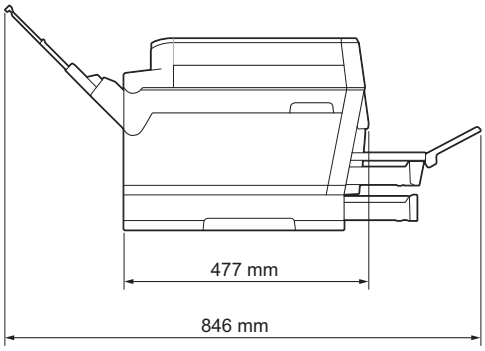

	• MFC-J6975DW 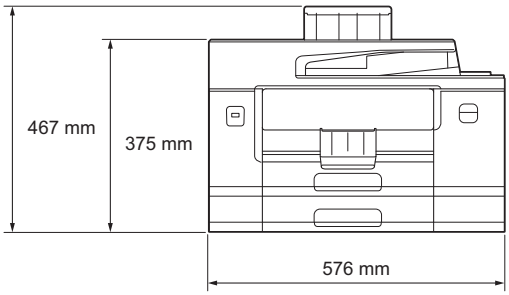 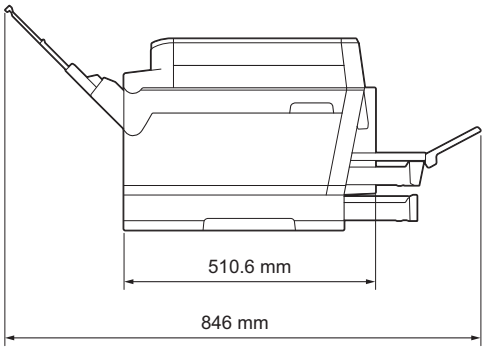 • MFC-J6977DW 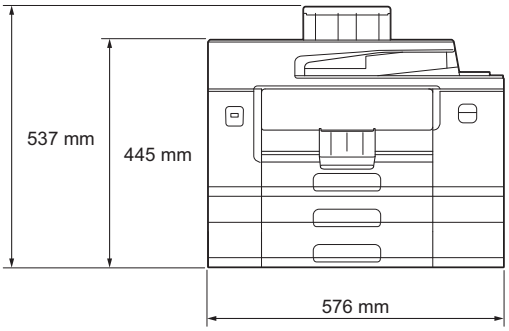 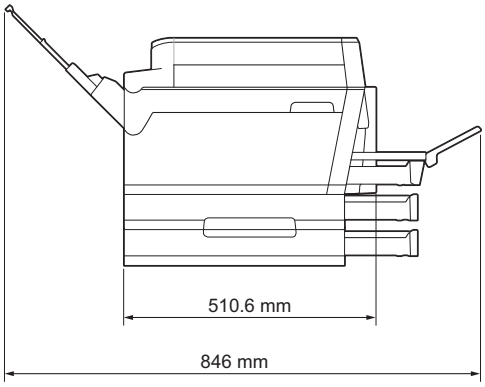
Weights	• MFC-J3660DW 20.0 kg • MFC-J3960DW 23.3 kg • MFC-J6560DW 20.1 kg • MFC-J6760DW 20.1 kg • MFC-J6960DW 23.4 kg

			• MFC-J6975DW 23.5 kg • MFC-J6977DW 27.6 kg
Noise Level	**Sound Pressure** [6]	**Operating**	• Printing 54.5 dB(A) (Approx.) • Copying (using the scanner glass) 53.0 dB(A) (Approx.)
	Sound Power [7]	**Printing** [8]	LWAc =6.89 B(A) (Mono) LWAc =6.77 B(A) (Colour)
Temperature	**Operating**		10 to 35°C
	Best Print Quality		20 to 33°C
Humidity	**Operating**		20 to 80% (without condensation)
	Best Print Quality		20 to 80% (without condensation)
Automatic Document Feeder (ADF)			Up to 50 pages Paper: 80 g/m²

1 Measured diagonally.

2 Measured when the machine is connected using the same network connection as the ENERGY STAR Ver. 3.2 test method. Power consumption varies slightly depending on the usage environment or part wear.

3 When using ADF, single-sided printing and scanning, resolution: standard / document: ISO/IEC 24712 printed pattern.

4 Measured according to IEC 62301 Edition 2.0.

5 Even when the machine is turned off, it will automatically turn itself on periodically for print head maintenance, and then turn itself off.

6 Noise depends on printing conditions.

7 Measured in accordance with the method described in ISO 7779.

8 Print speed:
31 ipm (Mono) / 30 ipm (Colour)
These print speeds are for 1-sided printing and measured in accordance with the ISO/IEC 24734 standard.

Document Size Specifications

Document Size	**ADF Width**	105 to 297 mm
	ADF Length [1]	148 to 431.8 mm
	Scanner Glass Width	Max. 297 mm
	Scanner Glass Length	Max. 431.8 mm

1 Up to 900 mm when using the long paper function.

Print Media Specifications

Paper Input	**Paper Tray #1**	**Paper Type** [1]	Plain Paper, Inkjet Paper (coated paper), Glossy Paper, Recycled Paper
		Paper Size	(Landscape) A4, Letter, Executive (Portrait) A3, Ledger, Legal, Mexico Legal, India Legal, Folio, A5, A6, Envelopes (C5, Com-10, DL, Monarch), Photo (10 x 15 cm), Photo L (9 x 13 cm), Photo 2L (13 x 18 cm), Index card (13 x 20 cm)
		Maximum Paper Capacity	Up to 250 sheets of 80 g/m² plain paper
	Paper Tray #2	**Paper Type**	Plain Paper, Recycled Paper

	(MFC-J3960DW/ MFC-J6960DW/ MFC-J6975DW/ MFC-J6977DW)	**Paper Size**	(Landscape) A4, Letter (Portrait) A3, Ledger, Legal, Mexico Legal, India Legal, Folio	
		Maximum Paper Capacity	Up to 250 sheets of 80 g/m² plain paper	
	Paper Tray #3 (MFC-J6977DW)	**Paper Type**	Plain Paper, Recycled Paper	
		Paper Size	(Landscape) A4, Letter (Portrait) A3, Ledger, Legal, Mexico Legal, India Legal, Folio	
		Maximum Paper Capacity	Up to 250 sheets of 80 g/m² plain paper	
	Multi-purpose Tray (MP Tray) [2] (MFC-J3960DW/ MFC-J6960DW/ MFC-J6975DW/ MFC-J6977DW)	**Paper Type** [1]	Plain Paper, Inkjet Paper (coated paper), Glossy Paper, Recycled Paper	
		Paper Size / Maximum Paper Capacity	(Landscape) A4, Letter, Executive (Portrait) A3, Ledger, Legal, Mexico Legal, India Legal, Folio, A5, A6, Envelopes (C5, Com-10, DL, Monarch), Photo (10 x 15 cm), Photo L (9 x 13 cm), Photo 2L (13 x 18 cm), Index card (13 x 20 cm)	Up to 100 sheets of 80 g/m² Plain Paper
			Long Paper (Width: 88.9 - 297 mm / Height: 431.9 - 1200 mm)	Up to 1 sheet
	Manual Feed Slot (MFC-J3660DW/ MFC-J6560DW/ MFC-J6760DW)	**Paper Type** [1]	Plain Paper, Inkjet Paper (coated paper), Glossy Paper, Recycled Paper	
		Paper Size	(Landscape) A4, Letter, Executive (Portrait) A3, Ledger, Legal, Mexico Legal, India Legal, Folio, A5, A6, Envelopes (C5, Com-10, DL, Monarch), Photo (10 x 15 cm), Photo L (9 x 13 cm), Photo 2L (13 x 18 cm), Index card (13 x 20 cm)	
		Maximum Paper Capacity	Up to 1 sheet	
Paper Output [1]			• Up to A4/Letter size paper Up to 100 sheets of 80 g/m² Plain Paper (face up print delivery to the output paper tray) • Over A4/Letter size paper Up to 50 sheets of 80 g/m² Plain Paper (face up print delivery to the output paper tray)	

1 For glossy paper, remove any printed pages from the output paper tray immediately to avoid smudging.

2 We recommend using the MP tray for glossy paper.

Fax Specifications

Compatibility	ITU-T Super Group 3
Modem Speed	Automatic Fallback: 33,600 bps

Scanning Width (Single-sided document)	288 mm (A3)
Scanning Width and Length (2-sided document) (MFC-J3960DW/MFC-J6760DW/MFC-J6960DW/MFC-J6975DW/ MFC-J6977DW)	Width: 288 mm (A3) (ADF) Length: 425.8 mm (ADF)
Printing Width	291 mm (A3)
Greyscale	Monochrome: 8 bit (256 levels) Colour: 24 bit (8 bit per colour/ 256 levels)
Resolution **(Horizontal)**	203 dpi
Resolution **(Vertical)**	Standard: 98 dpi (Mono) 196 dpi (Colour)
	Fine: 196 dpi (Mono) 196 dpi (Colour)
	Superfine: 392 dpi (Mono)
	Photo: 196 dpi (Mono)
Address Book	100 names x 2 numbers or Email addresses
Groups	Up to 6
Broadcasting	250 (200 Address Book/50 Manual Dial)
Automatic Redial	3 times at 5 minute intervals
Memory Transmission	Up to 150 pages [1]
Out of Paper Reception	Up to 150 pages [1]

1 'Pages' refers to the 'ITU-T Test Chart #1' (a typical business letter, Standard resolution, MMR code).

Copy Specifications

Colour/Monochrome		Yes/Yes
Copy Width		291 mm [1]
Multiple Copies		Stacks/Sorts up to 999 pages
Enlarge/Reduce		25% to 400% (in increments of 1%)
Resolution		Prints up to 1200 × 4800 dpi
Automatic 2-sided Copy (MFC-J3960DW/MFC-J6760DW/ MFC-J6960DW/MFC-J6975DW/ MFC-J6977DW)	**Paper Type**	Plain Paper, Recycled Paper
	Paper Size	A3, Ledger, Legal, Mexico Legal, India Legal, Folio, A4, A5, Letter

1 When copying on A3 size paper.

USB Flash Drive Specifications

Compatible Media	USB Flash drive [1]

JPEG Print	**Resolution**	Up to 1200 x 4800 dpi
	Paper Type	Plain Paper, Inkjet Paper (coated paper), Glossy Paper, Recycled Paper
	Paper Size	A4, Letter, A3, Ledger, Photo (10 x 15 cm), Photo 2L (13 x 18 cm)
	File Format	JPEG (Progressive JPEG format is not supported)
PDF Print (MFC-J6975DW/MFC-J6977DW)	**Resolution**	Up to 1200 x 1800 dpi
	Paper Type	Plain Paper, Recycled Paper
	Paper Size	A4, Letter, A3, Ledger, Legal, Mexico Legal, India Legal, Folio, A5, A6
	File Format	PDF version 2.0
Scan to Media	**File Format**	JPEG, PDF (Colour, Grey) TIFF, PDF (Monochrome)

[1] USB Flash drive is not included. Full-Speed USB 2.0. USB Mass Storage standard. Supported formats: FAT12/FAT16/FAT32/exFAT

Scanner Specifications

Colour/Monochrome	Yes/Yes
TWAIN Compliant	Yes (Windows 10 / Windows 11)
WIA Compliant	Yes (Windows 10 / Windows 11)
Colour Depth	48 bit colour processing (Input) 24 bit colour processing (Output)
Greyscale	16 bit colour processing (Input) 8 bit colour processing (Output)
Resolution	Up to 19200 × 19200 dpi (interpolated) [1] Up to 1200 × 2400 dpi (optical) (from Scanner Glass) Up to 600 × 600 dpi (optical) (from ADF)
Scanning Width and Length (Single-sided document)	(Scanner Glass) Width: Up to 295 mm Length: Up to 429.8 mm (ADF) Width: Up to 295 mm Length: Up to 429.8 mm
Scanning Width and Length (2-sided document) (MFC-J3960DW/MFC-J6760DW/MFC-J6960DW/ MFC-J6975DW/MFC-J6977DW)	Width: Up to 295 mm (ADF) Length: Up to 429.8 mm (ADF)

[1] The TWAIN driver only (Maximum 1200 × 1200 dpi scanning with the WIA driver in Windows 10 and Windows 11.)

Printer Specifications

Emulation (MFC-J6975DW/MFC-J6977DW)	PCL6, BR-Script3, PDF version 2.0
Resolution	Up to 1200 × 4800 dpi
Printing Width [1]	291 mm

		Borderless [2]: 297 mm
Borderless		A4, Letter, A3, Ledger, A6, Photo (10 x 15 cm), Photo L (9 x 13 cm), Photo 2L (13 x 18 cm), Index card (13 x 20 cm)
Automatic 2-sided Printing	**Paper Type**	Plain Paper, Recycled Paper
	Paper Size	A3, Ledger, Legal, Mexico Legal, India Legal, Folio, A4, A5, Letter, Executive
Print Speed		See your model's page on your local Brother website.

1 When printing on A3 size paper.
2 When the Borderless feature is set to On.

Interface Specifications

USB [1 2]	Use a USB 2.0 interface cable (TypeA/B) that is no longer than 5 m.
LAN	Use a straight-through Category 5e (or greater) twisted-pair cable for 10Base-T/100Base-TX/1000Base-T.
Wireless LAN	IEEE 802.11a/b/g/n (Infrastructure) IEEE 802.11a/g/n (Wi-Fi Direct)
NFC (MFC-J6975DW/MFC-J6977DW)	Yes

1 Your machine has a USB 2.0 Hi-Speed interface. The machine can also be connected to a computer that has a USB 1.1 interface.
2 Third party USB ports are not supported.

Network Specifications

You can connect your machine to a network for Network Printing, Network Scanning, PC-Fax Send, and PC-Fax Receive (Windows only).

Network Security (Wired)		APOP, SMTP-AUTH, SSL/TLS (IPP, IPPS, HTTP, HTTPS, SMTP, POP3, IMAP4, FTP, LDAP, LDAPS, TFTP, TFTPS), SNMP v3, 802.1x (EAP-MD5, EAP-FAST, PEAP, EAP-TLS, EAP-TTLS), OAuth 2.0 (SMTP, POP3, IMAP4), Kerberos, IPsec
Network Security (Wireless)		APOP, SMTP-AUTH, SSL/TLS (IPP, IPPS, HTTP, HTTPS, SMTP, POP3, IMAP4, FTP, LDAP, LDAPS, TFTP, TFTPS), SNMP v3, 802.1x (EAP-FAST, PEAP, EAP-TLS, EAP-TTLS), OAuth 2.0 (SMTP, POP3, IMAP4), Kerberos, IPsec
Wireless Network Security [1]		WEP 64/128 bit, WPA-PSK (TKIP/AES), WPA2-PSK (TKIP/AES), WPA3-SAE (AES)
Wireless Setup Support Utility	**WPS**	Yes

1 Wi-Fi Direct supports WPA2-PSK (AES) only.

Computer Requirements Specifications

Supported Operating Systems And Software Functions

Computer Platform & Operating System Version	**Computer Interface**			**Processor**	**Hard Disk Space to Install** [1]	
	USB [2]	**Wired LAN**	**Wireless LAN**		**For Drivers**	**For Applications**

						(Including Drivers)
Windows 10 Home [3] [4] Windows 10 Pro [3] [4] Windows 10 Education [3] [4] Windows 10 Enterprise [3] [4]	Printing PC Fax [5] Scanning			32 bit (x86) or 64 bit (x64) processor	80 MB	2.0 GB
Windows 11 Home [3] [4] Windows 11 Pro [3] [4] Windows 11 Education [3] [4] Windows 11 Enterprise [3] [4]				64 bit (x64) processor		
Windows Server 2016 Windows Server 2019 Windows Server 2022	Printing Scanning	Printing		64 bit (x64) processor	80 MB	80 MB
macOS v13 [6] macOS v14 [6] macOS v15 [6]	Printing PC Fax (Send) [5] Scanning			64 bit processor	N/A	500 MB
ChromeOS™	Printing Scanning			N/A	N/A	N/A
Linux (Supported Package Management System: dpkg, rpm) [7]	Printing PC Fax (Send) [5] Scanning			32bit (x86) or 64bit (x64) processor	20 MB	20 MB

1 An Internet connection is required to install the software.

2 Third party USB ports are not supported.

3 For WIA, 1200 x 1200 resolution.

4 PaperPort™ 14SE supports Windows 10 and Windows 11.

5 PC Fax supports black and white only.

6 macOS Disclaimer
AirPrint capable: Printing, scanning, or PC faxing (Send) via macOS requires the use of AirPrint. Mac drivers are not provided for this machine.

7 The driver is known to work on the following Linux Distributions.
Red Hat Enterprise Linux 8.6 64bit, Red Hat Enterprise Linux 9.1 64bit, Fedora 39 64bit, Mageia 9 32bit, Mageia 9 64bit, openSUSE 15.5 64bit, SUSE Enterprise15-SP4 64bit, Debian 12.2.0 32bit, Debian 12.2.0 64bit, Ubuntu MATE 18.04 32bit, Ubuntu 22.04 64bit, Ubuntu 23.10 64bit, Linux Mint 21.2 64bit, Ubuntu 24.04 64bit.

For the latest driver updates, go to your model's **Downloads** page at support.brother.com/downloads.

For the latest supported OS, go to your model's **Supported OS** page at support.brother.com/os.

All trademarks, brand and product names are the property of their respective companies.

Related Information

- Appendix

Supply Specifications

>> MFC-J3660DW/MFC-J3960DW
>> MFC-J6560DW/MFC-J6760DW/MFC-J6960DW
>> MFC-J6975DW/MFC-J6977DW

MFC-J3660DW/MFC-J3960DW

Ink	The machine uses individual Black, Yellow, Cyan and Magenta ink cartridges that are separate from the print head assembly.	
Service Life of Ink Cartridge	The first time you install the ink cartridges, the machine will use extra ink to fill the ink delivery tubes. This is a one-time process that enables high-quality printing. Actual yield of initial cartridges may be different from the replacement cartridges, due to ink system initialisation.	
Replacement Supplies	<Black> LC552BK <Yellow> LC552Y <Cyan> LC552C <Magenta> LC552M	Black, Yellow, Cyan and Magenta - Approximately 550 pages [1]
	<Black> LC552XLBK <Yellow> LC552XLY <Cyan> LC552XLC <Magenta> LC552XLM	Black - Approximately 3000 pages [1] Yellow, Cyan and Magenta - Approximately 1500 pages [1]

[1] All replacement cartridges will provide approximate page yield stated in accordance with ISO/IEC 24711. For more page yield information, see go.brother/pageyield.

MFC-J6560DW/MFC-J6760DW/MFC-J6960DW

Ink	The machine uses individual Black, Yellow, Cyan and Magenta ink cartridges that are separate from the print head assembly.	
Service Life of Ink Cartridge	The first time you install the ink cartridges, the machine will use extra ink to fill the ink delivery tubes. This is a one-time process that enables high-quality printing. Actual yield of initial cartridges may be different from the replacement cartridges, due to ink system initialisation.	
Replacement Supplies	<Black> LC527BK <Yellow> LC527Y <Cyan> LC527C <Magenta> LC527M	Black - Approximately 1300 pages [1] Yellow, Cyan and Magenta - Approximately 900 pages [1]
	<Black> LC527XLBK <Yellow> LC527XLY <Cyan> LC527XLC <Magenta> LC527XLM	Black - Approximately 3000 pages [1] Yellow, Cyan and Magenta - Approximately 2000 pages [1]
	<Black> LC528BK <Yellow> LC528Y <Cyan> LC528C <Magenta> LC528M	Black - Approximately 6000 pages [1] Yellow, Cyan and Magenta - Approximately 5000 pages [1]

[1] All replacement cartridges will provide approximate page yield stated in accordance with ISO/IEC 24711. For more page yield information, see go.brother/pageyield.

MFC-J6975DW/MFC-J6977DW

Ink	The machine uses individual Black, Yellow, Cyan and Magenta ink cartridges that are separate from the print head assembly.	
Service Life of Ink Cartridge	The first time you install the ink cartridges, the machine will use extra ink to fill the ink delivery tubes. This is a one-time process that enables high-quality printing. Actual yield of initial cartridges may be different from the replacement cartridges, due to ink system initialisation.	
Replacement Supplies	<Black> LC527BK <Yellow> LC527Y <Cyan> LC527C <Magenta> LC527M	Black - Approximately 1300 pages [1] Yellow, Cyan and Magenta - Approximately 900 pages [1]
	<Black> LC527XLBK <Yellow> LC527XLY <Cyan> LC527XLC <Magenta> LC527XLM	Black - Approximately 3000 pages [1] Yellow, Cyan and Magenta - Approximately 2000 pages [1]
	<Black> LC528BK <Yellow> LC528Y <Cyan> LC528C <Magenta> LC528M	Black - Approximately 6000 pages [1] Yellow, Cyan and Magenta - Approximately 5000 pages [1]
	<Black> LC528XLBK <Yellow> LC528XLY <Cyan> LC528XLC <Magenta> LC528XLM	Black - Approximately 12000 pages [1] Yellow, Cyan and Magenta - Approximately 10000 pages [1]

[1] All replacement cartridges will provide approximate page yield stated in accordance with ISO/IEC 24711. For more page yield information, see go.brother/pageyield.

Related Information

- Appendix

Environmental and Compliance Information

- Information Regarding Recycled Paper
- Availability of Service Parts
- Chemical Substances (EU REACH)

Information Regarding Recycled Paper

- Recycled paper is of the same quality as paper made from original forest sources. Standards governing modern recycled paper ensure that it meets the highest quality requirements for different printing processes. The imaging equipment supplied by Brother is suitable for using with recycled paper meeting the EN 12281:2002 standard.
- Purchasing recycled paper saves natural resources and promotes the circular economy. Paper is made using cellulose fibres from wood. Collecting and recycling paper extends the life of fibres over multiple life cycles, making the best use of the resources.
- The recycled paper production process is shorter. The fibres have already been processed, so less water and energy, and fewer chemicals are used.
- Paper recycling has the benefit of saving carbon by diverting paper products from alternative disposal routes such as landfill and incineration. Landfill waste emits methane gas, which has a powerful greenhouse effect.

Related Information

- Environmental and Compliance Information

Availability of Service Parts

We warrant that service parts will be available for at least seven years after the last date we place models on the market.*

To obtain service parts, contact your supplier or dealer.

*(For Spain) without prejudice to other rights you may have as a consumer

Related Information

- Environmental and Compliance Information

Chemical Substances (EU REACH)

Information concerning chemical substances within our products required for the REACH Regulation can be found at https://www.brother.eu/reach.

Related Information

- Environmental and Compliance Information

Brother Help and Customer Support

If you need help with using your Brother product, visit support.brother.com for FAQs and troubleshooting tips. You can also download the latest software, drivers and firmware, to improve the performance of your machine, and user documentation, to learn how to get the most from your Brother product.

Further product and support information is available from your local Brother office website. Visit global.brother/en/gateway to find the contact details for your local Brother office and to register your new product.

Related Information

- Appendix

brother

Brother
Earth

UK
Version A