AEG

aeg.com/register

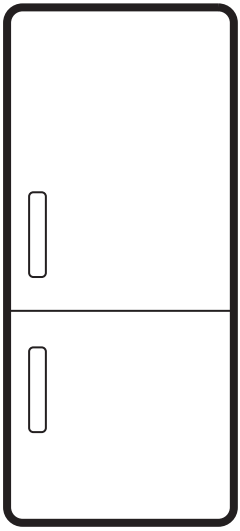

OSC6D181ES

INSTALLATION

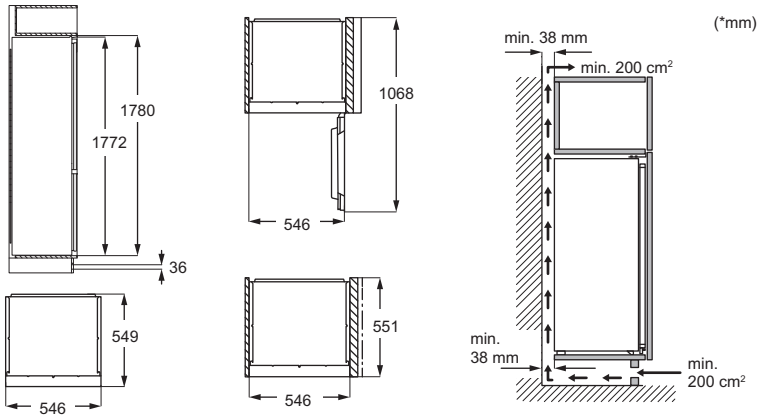

NOISES



ENGLISH

1. SAFETY INFORMATION..... **2**
2. SAFETY INSTRUCTIONS..... **4**
3. CONTROL PANEL..... **6**
4. DAILY USE..... **7**
5. HINTS AND TIPS..... **8**
6. CARE AND CLEANING..... **9**
7. TROUBLESHOOTING..... **9**
8. TECHNICAL DATA..... **10**
9. INFORMATION FOR TEST INSTITUTES **10**
10. ENVIRONMENTAL CONCERNS..... **10**

Subject to change without notice.

1. ⚠ SAFETY INFORMATION

Before the installation and use of the appliance read the supplied instructions carefully. The manufacturer is not responsible for any injuries or damage that result from in-

correct installation or usage. Always keep the instructions in a safe and accessible location for future reference.

1.1 Children and vulnerable people safety

- This appliance can be used by children aged from 8 years and above and persons with reduced physical, sensory or mental capabilities or lack of experience and knowledge if they have been given supervision or instruction concerning the use of the appliance in a safe way and understand the hazards involved. Children aged from 3 to 8 years and persons with very extensive and complex disabilities are allowed to load and unload the appliance provided that they have been properly instructed. Children of less than 3 years of age should be kept away from the appliance unless continuously supervised.
- Children should be supervised to ensure that they do not play with the appliance.
- Children shall not carry out cleaning and user maintenance of the appliance without supervision.
- Keep all packaging away from children and dispose of it appropriately.

1.2 General Safety

- This appliance is for storing food and beverages only.
- This appliance is designed for single household domestic use in an indoor environment.
- This appliance may be used in, offices, hotel guest rooms, bed & breakfast guest rooms, farm guest houses and other similar accommodation where such use does not exceed (average) domestic usage levels.
- To avoid contamination of food respect the following instructions:
  - do not open the door for long periods;
  - clean regularly surfaces that can come in contact with food and accessible drainage systems;
  - store raw meat and fish in suitable containers in the refrigerator, so that it is not in contact with or drip onto other food.
- WARNING: Keep ventilation openings, in the appliance enclosure or in the

built-in structure, clear of obstruction.
- WARNING: Do not use mechanical devices or other means to accelerate the defrosting process, other than those recommended by the manufacturer.
- WARNING: Do not damage the refrigerant circuit.
- WARNING: Do not use electrical appliances inside the food storage compartments of the appliance, unless they are of the type recommended by the manufacturer.
- Do not use water spray and steam to clean the appliance.
- Clean the appliance with a moist soft cloth. Only use neutral detergents. Do not use abrasive products, abrasive cleaning pads, solvents or metal objects.
- When the appliance is empty for long period, switch it off, defrost, clean, dry and leave the door open to prevent mould from developing within the appliance.
- Do not store explosive substances such as aerosol cans with a flammable propellant in this appliance.
- If the supply cord is damaged, it must be replaced by the manufacturer, its Authorised Service Centre or similarly qualified persons in order to avoid a hazard.

2. SAFETY INSTRUCTIONS

2.1 Installation

⚠ WARNING!
Only a qualified person must install this appliance.

- Remove all the packaging.
- Do not install or use a damaged appliance.
- Do not use the appliance before installing it in the built-in structure due to safety manner.
- Follow the separate instructions for the installation and door reversing supplied with the appliance or available on our website.
- Always take care when moving the appliance as it is heavy. Always use safety gloves and enclosed footwear.
- Make sure the air can circulate around the appliance.
- At first installation or after reversing the door, wait at least 4 hours before connecting the appliance to the power supply. This is to allow the oil to flow back in the compressor.
- Before carrying out any operations on the appliance (e.g. reversing the door), remove the plug from the power socket.
- Do not install the appliance close to radiators or cookers, ovens, or hobs, unless otherwise specified in the installation instructions.
- Do not expose the appliance to the rain.
- Do not install the appliance where there is direct sunlight.
- Do not install this appliance in areas that are too humid or too cold.
- When you move the appliance, lift it by the front edge to avoid scratching the floor.

- Protect the floor from scratches when reversing the appliance door.
- The appliance contains a bag of desiccant. This is not a toy. This is not food. Please dispose of it immediately.

2.2 Electrical connection

⚠ WARNING!
Risk of fire and electric shock.

⚠ WARNING!
When positioning the appliance, ensure the supply cord is not trapped or damaged.

⚠ WARNING!
Do not use multi-plug adapters and extension cables.

⚠ CAUTION!
Any electrical work required to install this appliance should be carried out by a qualified electrician.

- Make sure that the parameters on the rating plate are compatible with the electrical ratings of the mains.
- The appliance must be earthed.
- Always use a correctly installed shockproof socket.
- If the domestic power supply socket is not earthed, connect the appliance to a separate earth in compliance with current regulations, consulting a qualified electrician.
- Make sure not to cause damage to the electrical components (e.g. mains plug, mains cable, compressor). Contact the Authorised Service Centre or an electrician to change the electrical components.
- The mains cable must stay below the level of the mains plug.
- Connect the mains plug to the mains socket only at the end of the installation. Make sure that there is access to the mains plug after the installation.
- Do not disconnect the appliance by pulling on the mains cable. Always pull on the mains plug.
- This appliance is fitted with a 13 A mains plug. If it is necessary to change the mains plug fuse, use only a 13 A ASTA (BS 1362) fuse (UK and Ireland only).

2.3 Use

⚠ WARNING!
Risk of injury, burns, electric shock or fire.


The appliance contains flammable gas, isobutane (R600a), a natural gas with a high level of environmental compatibility. Be careful not to cause damage to the refrigerant circuit containing isobutane.

- Do not modify this appliance.
- Any use of the built-in product as free-standing is strictly prohibited.
- This appliance is intended to be used at ambient temperature ranging from 10°C to 38°C. The specified temperature range guarantees the correct operations of the appliance.
- Do not put electrical appliances (e.g. ice cream makers) in the appliance unless they are stated applicable by the manufacturer.
- If damage occurs to the refrigerant circuit, make sure that there are no flames and sources of ignition in the room. Ventilate the room.
- Do not let hot items to touch the plastic parts of the appliance.
- Do not put soft drinks in the freezer compartment. This will create pressure on the drink container.
- Do not store flammable gas and liquid in the appliance.
- Do not put flammable products or items that are wet with flammable products in, near or on the appliance.
- Do not touch the compressor or the condenser. They are hot.
- Do not remove or touch items from the freezer compartment if your hands are wet or damp.
- Do not freeze again food that has been thawed.
- Follow the storage instructions on the packaging of frozen food.
- Wrap the food in any food contact material before putting it in the freezer compartment.
- Do not allow food to come in contact with the inner walls of the appliance compartments.

2.4 Internal lighting

⚠ WARNING!
Risk of electric shock.

- This product contains one or more light sources of energy efficiency class G.
- Concerning the lamp(s) inside this product and spare part lamps sold separately: These lamps are intended to withstand extreme physical conditions in household appliances, such as temperature, vibration, humidity, or are intended to signal information about the operational status of the appliance. They are not intended to be used in other applications and are not suitable for household room illumination.

2.5 Care and cleaning

⚠ WARNING!
Risk of injury or damage to the appliance.

- Before maintenance, deactivate the appliance and disconnect the mains plug from the mains socket.
- This appliance contains hydrocarbons in the cooling unit. Only a qualified person must do the maintenance and the recharging of the unit.
- Check the product regularly for signs of deterioration that may make it unsuitable for food contact, such as cracks, blisters, delamination, shrinkage, stickiness, corrosion, or other visible changes in texture or appearance. Follow cleaning and care instructions to prevent deterioration.
- Regularly examine the drain of the appliance and if necessary, clean it. If the drain is blocked, defrosted water collects in the bottom of the appliance.

2.6 Service

- To repair the appliance contact the Authorised Service Centre. Use only original spare parts.
- Please note that self-repair or non-professional repair can have safety consequences and might void the guarantee.
- The following spare parts are available for at least 7 years after the model has been discontinued: thermostats, temperature sensors, printed circuit boards, light sources, door handles, door hinges, trays and baskets. Door gaskets are available for at least 10 years after the model has been discontinued. The duration may be longer in your country. For further information, please visit our website.
- Please note that some of these spare parts are only available to professional repairers, and that not all spare parts are relevant for all models.

2.7 Disposal

⚠ WARNING!
Risk of injury or suffocation.

- Disconnect the appliance from the mains supply.
- Cut off the mains cable and discard it.
- Remove the door to prevent children and pets to be closed inside of the appliance.
- The refrigerant circuit and the insulation materials of this appliance are ozone-friendly.
- The insulation foam contains flammable gas. Contact your municipal authority for information on how to discard the appliance correctly.
- Do not cause damage to the part of the cooling unit that is near the heat exchanger.

3. CONTROL PANEL

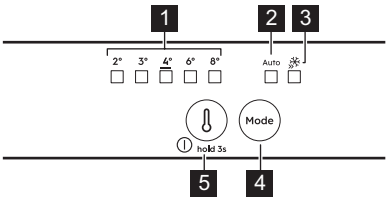

1 Temperature indicators

2 AI CoolAssist indicator

3 Extra Freeze indicator

4 Mode button
Press to activate/deactivate AI CoolAssist.
Press to activate/deactivate Extra Freeze function.
Press the Mode button until temperature indicator turns on to come back to the manual setting.

5 **Temperature regulation button/ ON/OFF button**
Press to set the temperature (2°C- 8°C; recommended 4°C).

ⓘ The set temperature will be reached within 24 h.
After a power failure, the appliance restores the previously set temperatures.

3.1 Switching on/off

Switching on: Insert the plug into the power socket. If all LED indicators are off, press the temperature regulation button.

Switching off: Press the temperature regulation button for 3 sec until all indicators turn off.

3.2 AI CoolAssist

AI CoolAssist is a machine learning-powered feature that automatically adjusts appliance settings based on usage patterns. Use it to enable:

- temperature management: ensures effective food preservation.
- Auto Shopping Mode: adjusts temperature in the fridge to quickly cool newly added items.
- Auto Vacation Mode: reduces the energy consumption when the appliance is not in use for three or more consecutive days. Remove perishable food from the fresh food compartment before leaving for vacation.

ⓘ AI CoolAssist disables Extra Cool or Extra Freeze. Extra Cool or Extra Freeze temporarily pauses AI CoolAssist.

ⓘ Temperature regulation button is disabled when AI CoolAssist is on. Turn it off to adjust the temperature.

3.3 Extra Freeze function

Use Extra Freeze to fast freeze in the freezer.

Activate the function at least 24 h before placing the food. The function stops after a max. of 52 h.

3.4 Alarms

ⓘ Press any button to switch off the acoustic alarm.

Door open alarm

If the fridge door is left open for 5 min the sound is on. Close the door to stop the alarm.

Power outage

When the temperature in the appliance rises due to the prolonged power failure, all temperature LEDs blink and the sound is on until proper conditions are restored. The sound switches off automatically after 1 h.

4. DAILY USE

4.1 Removing drawers

Drawers are suitable for the storage of fruit and vegetables.

1. Pull the drawer out until it stops.
2. Once you reach the end of the runners, lift slightly the front of the drawer and remove it from the appliance.

ⓘ In some models, to remove the drawer, remove the bottle bin first.

4.2 Temperature indicator

If OK is displayed (A), put fresh food into area indicated by the symbol. If not (B), wait at least 12 h and check again. If it is still not OK (B), set a colder temperature.



4.3 Fan

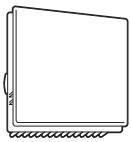

Fan activates automatically when needed.

Do not remove the cover of the fan.

5. HINTS AND TIPS

5.1 Optimization tips

- Freezer: The original configuration ensures the most efficient use of energy.
- Fridge: The configuration with the drawers in the bottom part of the appliance and shelves evenly distributed ensures the most efficient use of energy. Position of the door bins does not affect energy consumption.
- Do not open the door frequently or leave it open longer than necessary.
- Freezer: The colder the temperature setting, the higher the energy consumption.
- Fridge: Do not set too high temperature unless it is required by the characteristics of the food.
- If the ambient temperature is high and the temperature control is set to low temperature and the appliance is fully loaded, the compressor may run continuously, causing frost or ice formation on the evaporator. In this case, set the temperature control toward higher temperature to allow automatic defrosting.
- Do not cover the ventilation grilles or holes.

5.2 Hints for freezing

- Store the fresh food evenly distributed in the first compartment or drawer from the top.
- Do not freeze bottles or cans with liquids, in particular drinks containing carbon dioxide as they may explode during freezing.
- Do not put hot food in the freezer compartment.
- Do not place fresh unfrozen food directly next to already frozen food.
- Do not eat ice cubes, water ices or ice lollies immediately after taking them out of the freezer to avoid frostbites.
- Do not re-freeze defrosted food.

5.3 Hints for storage of frozen food

- Freezer compartment is marked with ✳ ✳✳✳.
- Good temperature setting that ensures preservation of frozen food products is a temperature less than or equal to -18°C.
- Higher temperature setting inside the appliance may lead to shorter shelf life.
- The whole freezer compartment is suitable for storage of frozen food products.
- Leave enough space around the food to allow air to circulate freely.

5.4 Shelf life for freezer compartment

Type of food	Shelf life (months)
Bread	3
Fruits (except citrus)	6 - 12
Vegetables	8 - 10
Leftovers without meat	1 - 2
Dairy food:	
Butter	6 - 9
Soft cheese (e.g. mozzarella)	3 - 4
Hard cheese (e.g. parmesan, cheddar)	6
Seafood:	
Fatty fish (e.g. salmon, mackerel)	2 - 3
Lean fish (e.g. cod, flounder)	4 - 6
Shrimps	12
Shucked clams and mussels	3 - 4
Cooked fish	1 - 2
Meat:	
Poultry	9 - 12
Beef	6 - 12
Pork	4 - 6
Lamb	6 - 9
Sausage	1 - 2
Ham	1 - 2
Leftovers with meat	2 - 3

5.5 Hints for food refrigeration

ⓘ Fresh food compartment is marked (on the rating plate) with .

- Good temperature setting that ensures preservation of fresh food is a temperature less than or equal to +4°C.

- Always use closed containers for liquids and for food, to avoid flavours or odours in the compartment.
- To avoid the cross-contamination between cooked and raw food, cover the cooked food and separate it from the raw one.
- Wrap and place meat on the glass shelf above the vegetable drawer.
- Defrost the food inside the fridge.
- Do not insert hot food inside the appliance.
- Clean fruit and vegetables and place in a dedicated drawer (vegetable drawer).
- Do not keep exotic fruits in the fridge.
- Do not keep vegetables like tomatoes, potatoes, onions, and garlic in the fridge.
- Close the bottles before you put them into the fridge.

6. CARE AND CLEANING

6.1 Cleaning the interior

Before first use clean the interior and accessories with lukewarm water and neutral soap, then dry. Clean the equipment and door gaskets regularly.

Clean the control panel with a damp cloth and dry it with a soft cloth. Do not use any detergents.

Clean the defrost water drain hole, located at the back of the fridge compartment, using the tube cleaner regularly.

ⓘ Do not wash the accessories and appliance parts in a dishwasher.

6.2 Defrosting the appliance

Fridge:

Defrosting of the fridge compartment is automatic.

Freezer:

ⓘ Never use sharp metal tools to scrape off frost from the evaporator of the freezer.

Defrost the freezer when the frost layer reaches a thickness of above 3 mm.

1. Switch off and unplug the appliance.
2. Remove stored food.
3. Leave the door open and protect the floor from the water.
4. Dry the interior after defrosting.
5. Switch on the appliance. Close the door.
6. Set the lowest temperature for at least 3 h before you put the food back into the freezer compartment.

7. TROUBLESHOOTING

The appliance does not operate.

- Connect the mains plug to the mains socket correctly.
- Switch on the appliance.
- Ensure there is voltage in the mains socket. Contact a qualified electrician.

The appliance is noisy.

Check if the appliance is supported properly.

Acoustic or visual alarm is on.

Close the door or press any button to deactivate acoustic alarm.

The compressor operates continually.

- Adjust the temperature.
- Wait for the temperature to stabilize.
- Allow food to cool to room temperature before storing.
- Close the door correctly.

Door is misaligned or interferes with ventilation grill.

Refer to installation instructions.

Door does not open easily.

Wait a few seconds between closing and reopening of the door.

There is too much frost and ice.

- Close the door correctly.
- Clean or replace the gasket.
- Wrap the food properly.
- Adjust the temperature.

Water flows on the rear plate of the refrigerator.

This is a part of defrosting process.

There is too much condensed water inside the fridge.

- Open the door only when necessary and close it completely.
- Set the warmer temperature in the refrigerator (approx. 6-7°C) in summer and autumn.

Water flows inside the fridge.

- Ensure that food does not touch the rear plate.
- Clean the water outlet.

Water flows on the floor.

Attach the melting water outlet to the evaporative tray.

Temperature cannot be set.

Switch off Extra Freeze function.

Temperature setting LEDs flash at the same time.

The cooling system keeps food cold. Temperature adjustment is disabled. If the problem persists, contact the Authorised Service Centre.

The lamp does not work or the door gaskets are damaged.

Contact the Authorised Service Centre.

8. TECHNICAL DATA

The technical information is on the energy label and on the appliance rating plate, which may be located on or inside the appliance.

The QR code on the energy label supplied with the appliance provides a web link to the information related to the performance of the appliance in the EU EPREL database. Keep the energy label for reference together with the user manual and all other documents provided with this appliance. It is also possible to find the same information in EPREL using the link *https://eprel.ec.europa.eu* and the model name and product number that you find on the rating plate of the appliance. See the link *www.theenergylabel.eu* for detailed information about the energy label.

9. INFORMATION FOR TEST INSTITUTES

Installation and preparation of the appliance for Ecodesign verification must comply with EN 62552 (EU, Switzerland and UK). Refer to Installation for ventilation requirements, recess dimensions, and minimum rear clearances. Contact the Authorised Service Centre for any further information.

10. ENVIRONMENTAL CONCERNS

Recycle materials with the symbol ♺. Put the packaging in relevant containers to recycle it. Help protect the environment and human health by recycling waste of electrical and electronic appliances. Do not dispose of appliances marked with the symbol  with the household waste. Return the product to your local recycling facility or contact your municipal office.



CE

222385198-C-392026