P2426/P2426E Outline Dimensions
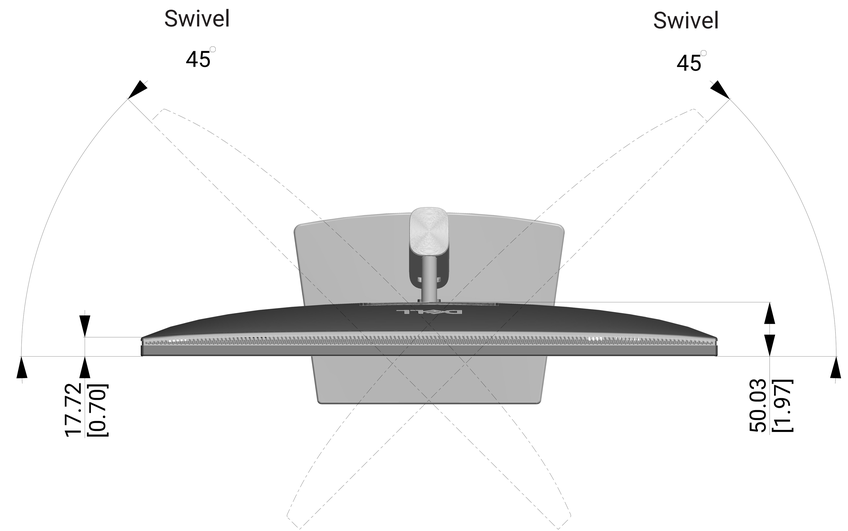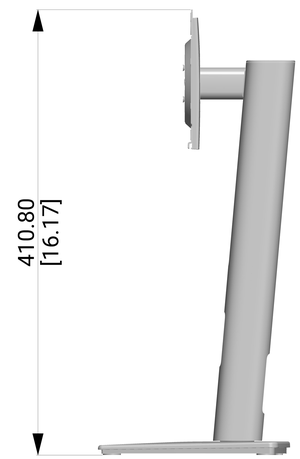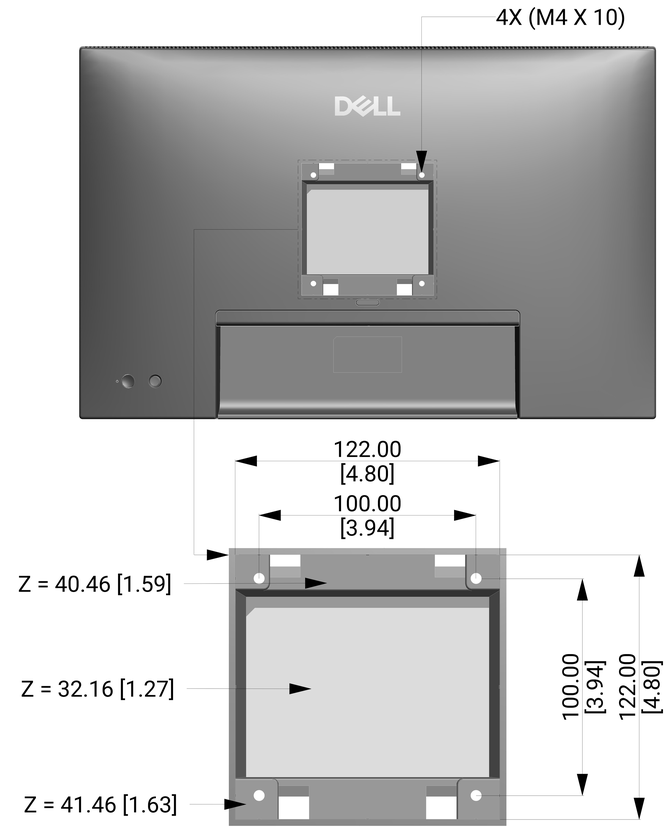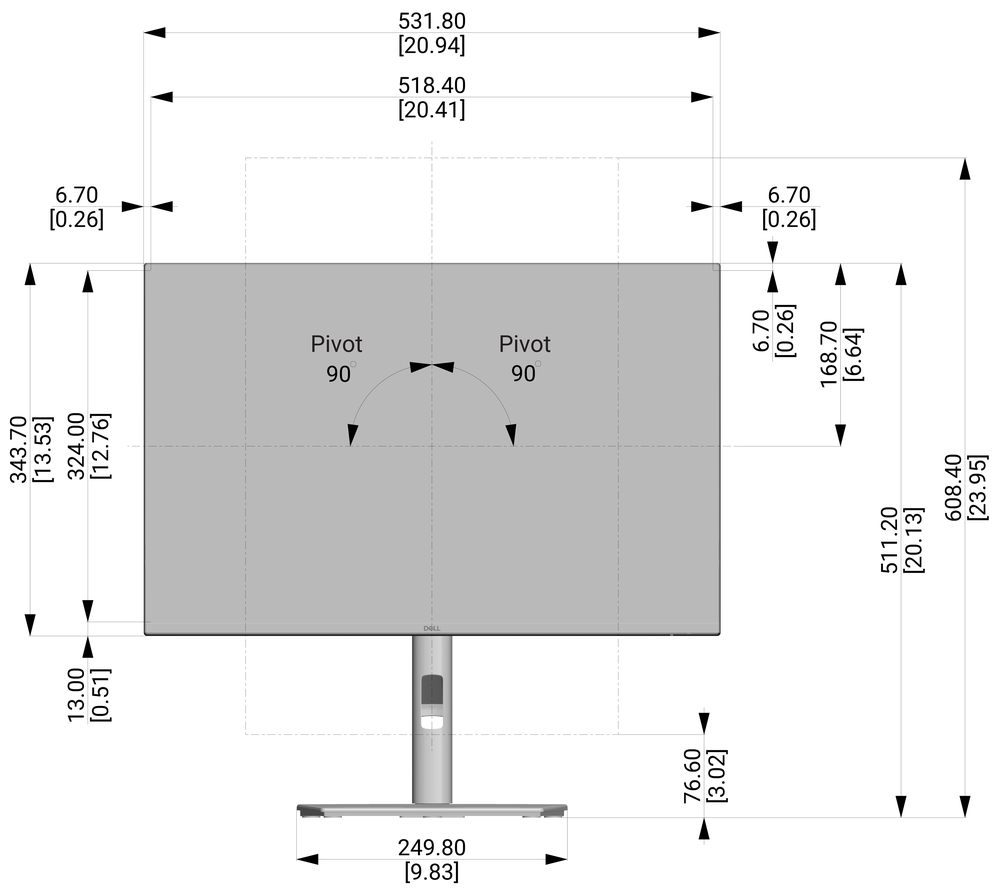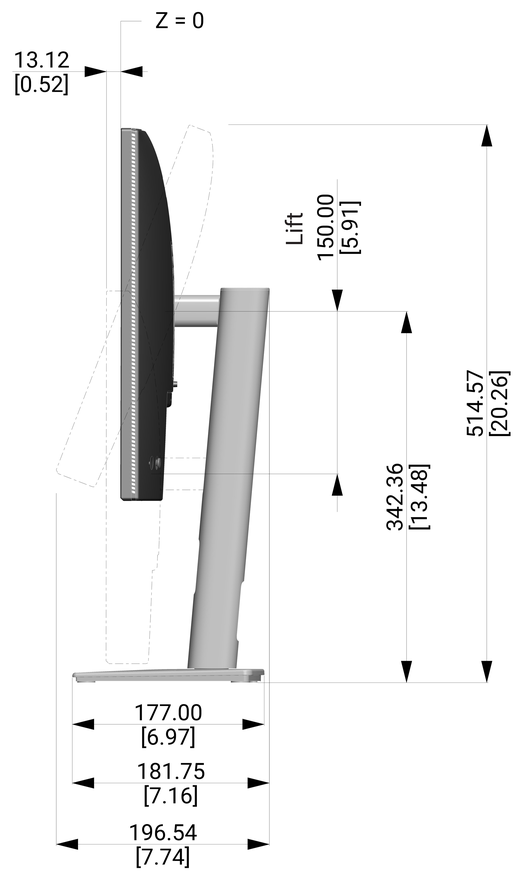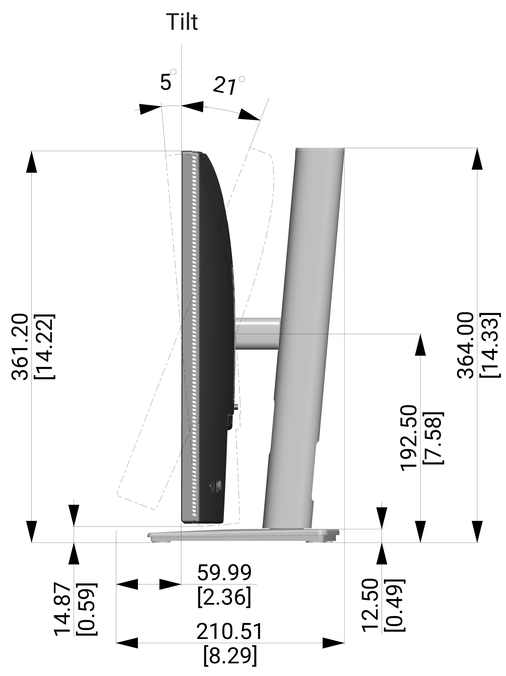
Unit : mm [inch]
Dimension : Nominal
Drawing : Not to scale