mm [inch]

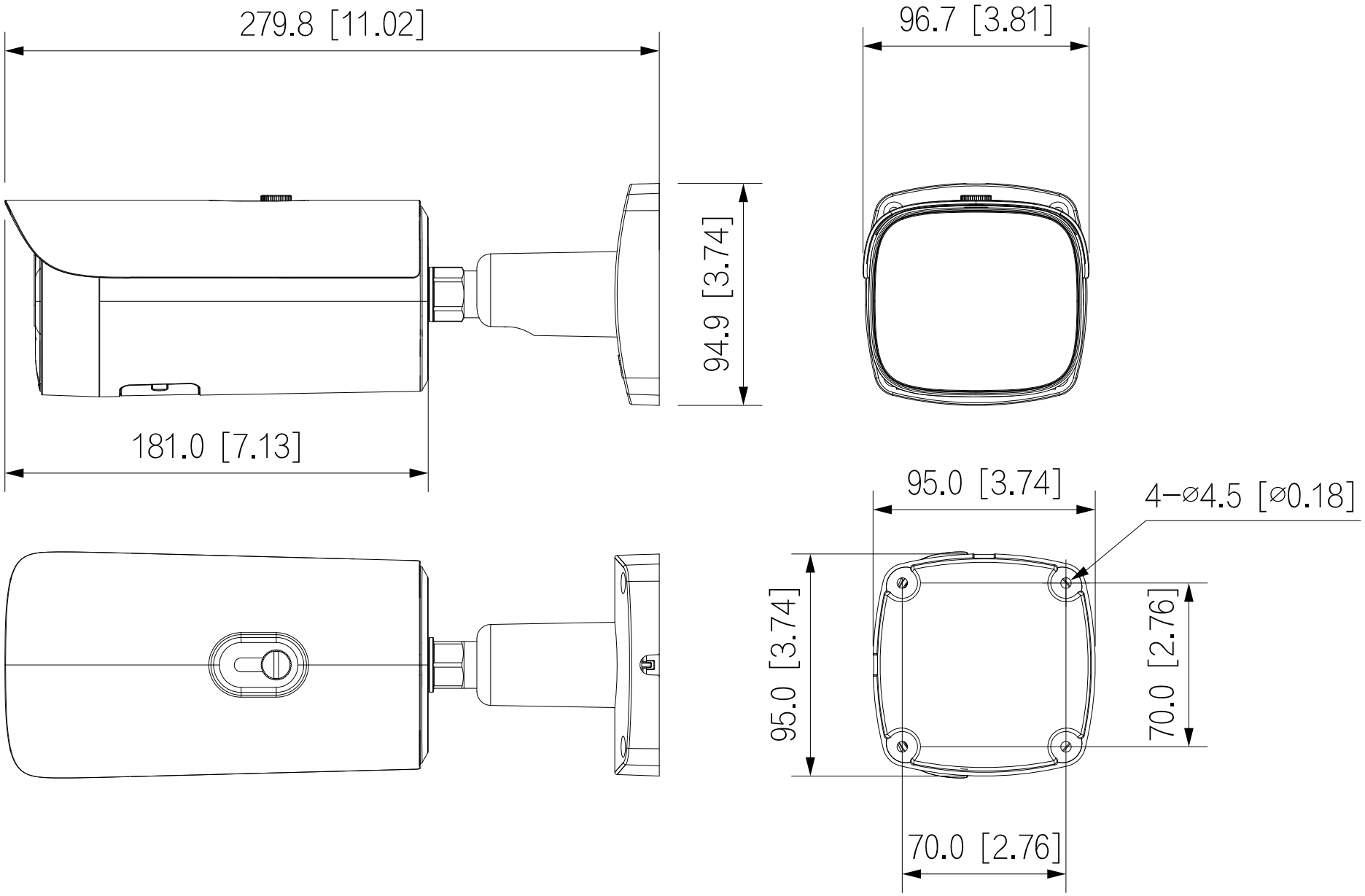
279.8 [11.02]
96.7 [3.81]
94.9 [3.74]
181.0 [7.13]
95.0 [3.74]
4−⌀4.5 [⌀0.18]
95.0 [3.74]
70.0 [2.76]
70.0 [2.76]