PRODUCT DATA SHEET - CLIP BRANCH

bouncepad®

Tablet Attachment:	Arm:	Mounting:	Packaged Weight:	Colour:
Clip	Branch	Fixing from **Below** Fixing from **Above**	1.42kg	White Black

Mounting:
Fixing from Below

Tablet
Apple iPad
11-inch (A16)

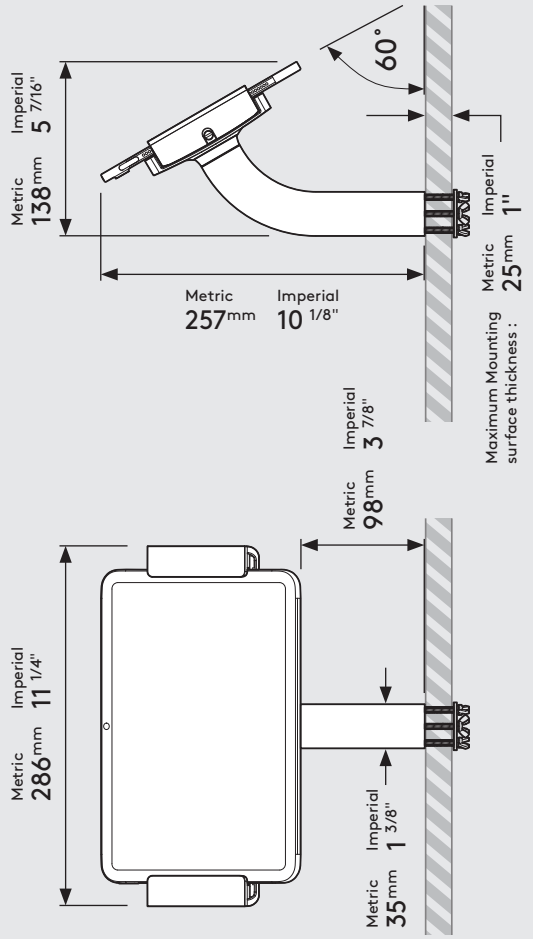

Mounting:
Fixing from Above

Tablet
Apple iPad
11-inch (A16)

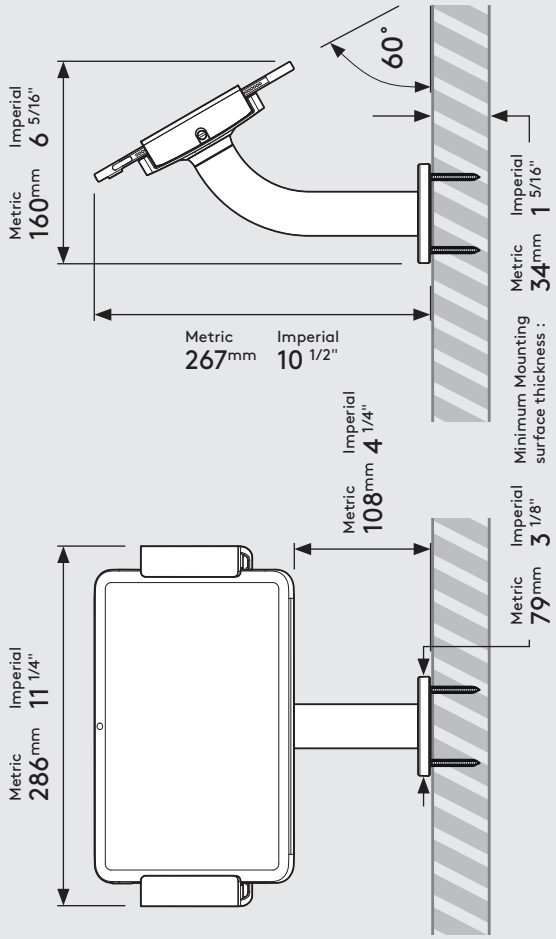

Parts in the Box

Clip Mount
Powder Coated Aluminium
PC/ABS Plastic
Nylon
Silicone Rubber
Stainless Steel

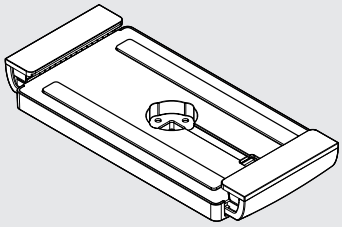

Branch Mounting Arm
Anodised Aluminium
Powder Coated Stainless
Steel & Aluminium

Surface Mounting Kit
Powder Coated Aluminium
PC/ABS Plastic

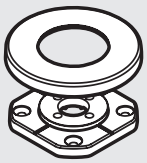

Flat Cable
Silicone Rubber

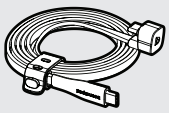

Fixing Kit

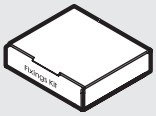

Clip Security Kit

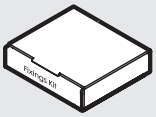

Sheet Code: BP-DAT-CLPBRA-098_REV0
Release Date: 07/01/2026

Copyright 2026 SpotSpot Ltd. (T/A Bouncepad) all rights reserved.
Confidential, no part of this publication may be reproduced or transmitted
in any form without the written permission of the copyright holder.