PRODUCT DATA SHEET - CLIP COUNTER TWIST

bouncepad®

Tablet Attachment:	Arm:	Mounting:	Packaged Weight:	Colour:
Clip	Twist	Freestanding Base	3.42kg	White Black

Dimensions

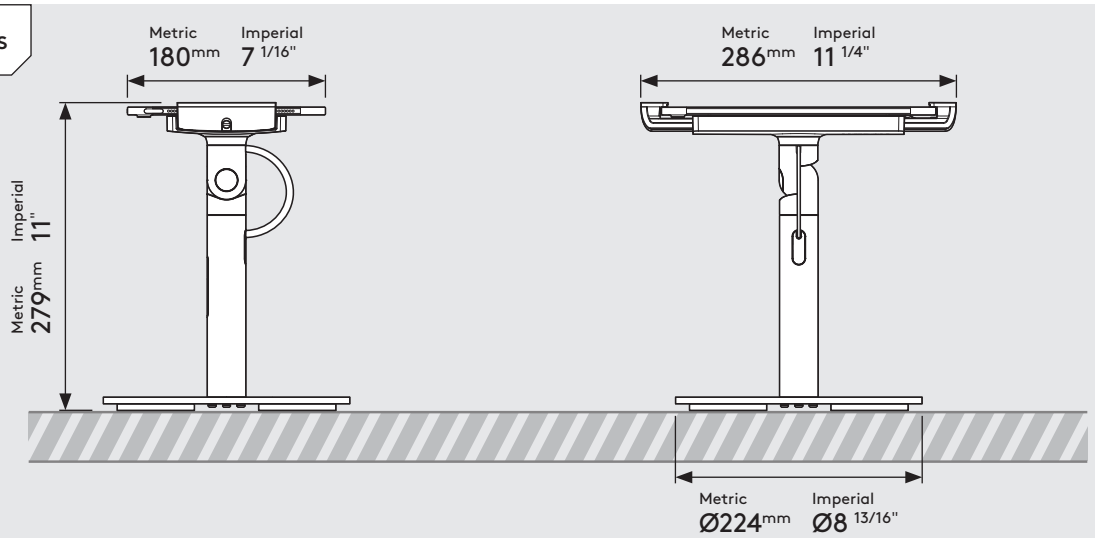

Parts in the Box

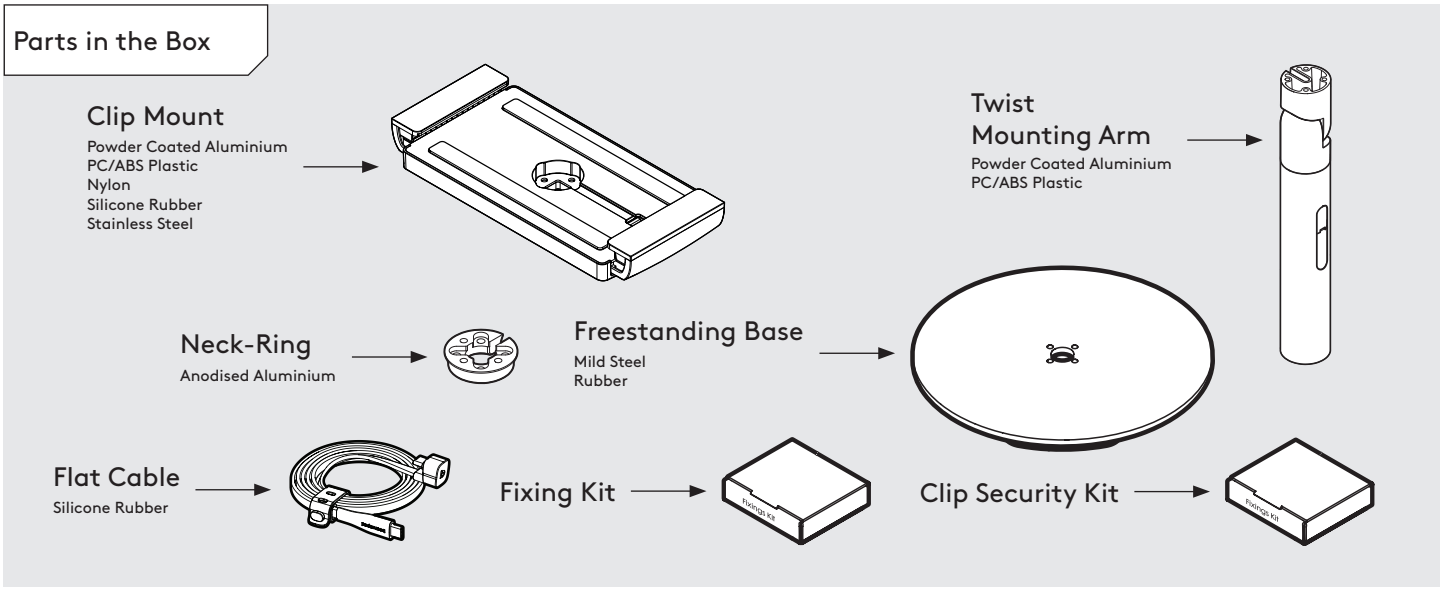

Sheet Code: BP-DAT-CLPCOTWT-112_REV0

Release Date: 09/01/2026

Copyright 2026 SpotSpot Ltd. (T/A Bouncepad) all rights reserved.
Confidential, no part of this publication may be reproduced or transmitted in any form without the written permission of the copyright holder.