PRODUCT DATA SHEET - CLIP TWIN

bouncepad®

Tablet Attachment:	Arm:	Mounting:	Packaged Weight:	Colour:
Clip & Core	Twin	Fixing from **Below** Fixing from **Above**	1.66kg	White Black

Mounting:
Fixing from Below

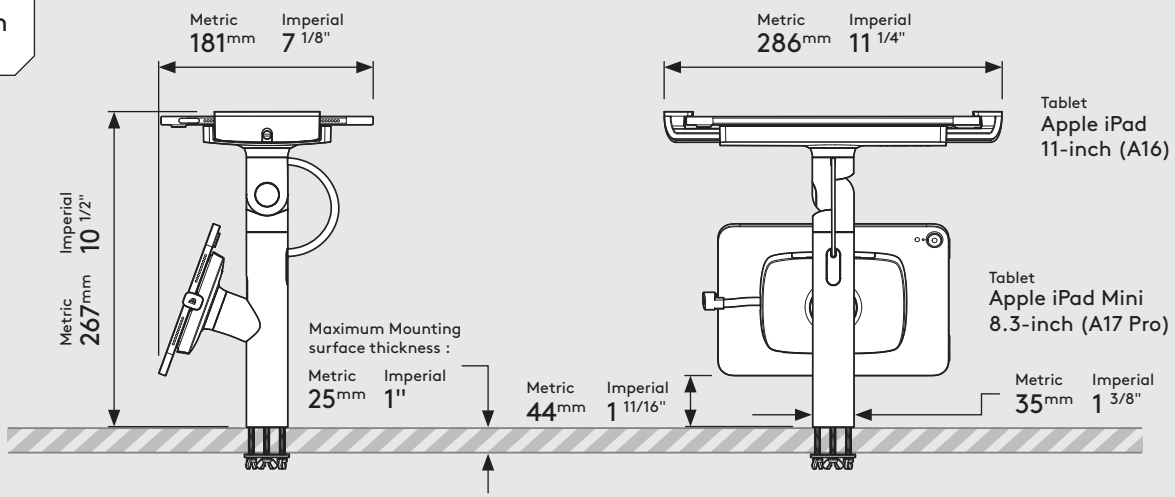

Mounting:
Fixing from Above

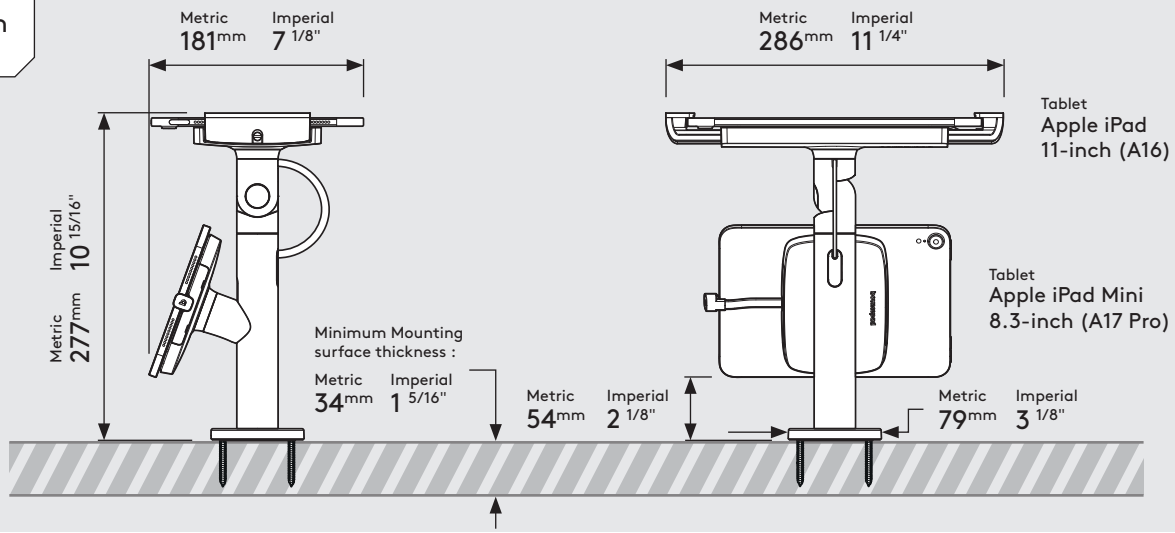

Parts in the Box

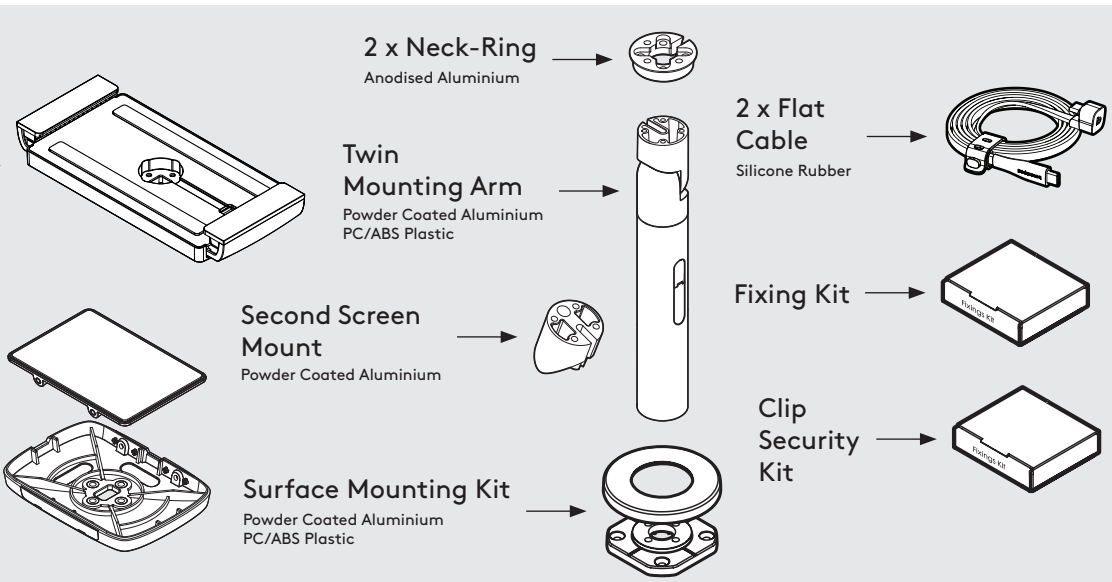

Clip Mount
Powder Coated Aluminium
PC/ABS Plastic
Nylon
Silicone Rubber
Stainless Steel

2 x Neck-Ring
Anodised Aluminium

Twin Mounting Arm
Powder Coated Aluminium
PC/ABS Plastic

2 x Flat Cable
Silicone Rubber

Core Tablet Mounting Plate
Glass Filled Nylon
3M VHB Adhesive

Second Screen Mount
Powder Coated Aluminium

Fixing Kit

Core Shell
PC/ABS Plastic

Surface Mounting Kit
Powder Coated Aluminium
PC/ABS Plastic

Clip Security Kit

Sheet Code: BP-DAT-CLPTWN-113_REV0
Release Date: 12/01/2026

Copyright 2026 SpotSpot Ltd. (T/A Bouncepad) all rights reserved.
Confidential, no part of this publication may be reproduced or transmitted in any form without the written permission of the copyright holder.