Hisense

life reimagined

USER'S OPERATION MANUAL

Before operating this unit, please read this manual thoroughly, and retain for future reference.

WF1I1342BWM
WF1I1342BWM1
WFG21314M
WFG21342BBM
WFG21342B*M3
WF1I1342BTM
WF1I1342B*M2
WFG21342BWM
WFG21342BWM1
WF1I1342BBM
WF1I1342B*M3
WFG21342BTM
WFG21342B*M2

EN

English

Thank you very much for choosing our product.

- Please install and operate this product correctly. Do not use it for any laundry labelled as not suitable for machine washing.
- The pictures shown in the manual are for illustrative purposes only. Appearance, printing and other details are subject to actual product.
- We prioritize technological innovation. To improve its overall performance, the appliance is subject to technical changes without notice.
- This product is intended solely for household use.

The following symbols used in this manual are defined below:

Information, advice, tip, or recommendation

WARNING - General Danger

WARNING - Danger of Electric Shock

WARNING - Danger of Hot Surface

WARNING - Danger of Fire

Please read this manual thoroughly.

CONTENTS

4 SAFETY PRECAUTIONS

10 PRODUCT DESCRIPTION
11 Specifications

INTRODUCTION

12 INSTALLATION AND CONNECTION
12 Packing/Packaging
14 Removing the transport screws/rods
15 Installation location
15 Ad justable feet
15 Installation clearance
16 Connecting to water supply
19 Connecting and securing the water discharge hose
20 Connecting to power mains
21 Transportation after installation

22 BEFORE USING THE APPLIANCE FOR THE FIRST TIME

PREPARATION BEFORE FIRST USE

26 PROGRAMS AND FUNCTIONS
27 Program table
29 Additional settings and functions
33 Start the program
33 End of the program

34 PROGRAM INTERRUPTIONS AND CHANGES

WASHING STEPS

35 MAINTENANCE AND CLEANING
35 Clean the detergent drawer
36 Clean the water inlet hose, detergent drawer outer compartment, and rubber door gasket
37 Clean the pump filter
38 Clean the inlet filter
38 Cleaning the outside of your washer

CLEANING AND MAINTENANCE

39 TROUBLESHOOTING
42 FAULT CODES AND TROUBLESHOOTING
43 SERVICING

TROUBLE-SHOOTING

43 USAGE RECOMMENDATIONS
44 STAIN REMOVAL TIPS
46 DISPOSAL
47 TYPICAL CONSUMPTION TABLE

MISCELLANE-OUS

SAFETY PRECAUTIONS

Please read this manual carefully before operating the appliance.

Do not operate the appliance without understanding or reading this manual.

This manual applies to multiple models. Therefore, it may include features not applicable to your model.

Failure to follow the instructions or improper operation may cause damage to laundry or equipment, or result in personal injury. Please keep the manual near the appliance for easy access.

This appliance is intended to be used in household and similar applications such as:

- staff kitchen areas in shops, offices and other working environments;
- farm houses;
- by clients in hotels, motels and other residential type environments;
- bed and breakfast type environments;
- areas for communal use in blocks of flats or in launderettes.

If the appliance is used for professional, for-profit purpose or purpose exceeding normal use in a household and similar applications, or if the appliance is used by a person who is not a consumer, the warranty period shall be equal to the shortest warranty period required by relevant legislation.

This appliance is not intended for use by persons (including children) with reduced physical, sensory or mental capabilities, or lack of experience and knowledge, unless they have been given supervision or instruction concerning use of the appliance by a person responsible for their safety.

Children should be supervised to ensure that they do not play with the appliance.

Children of less than 3 years should be kept away unless continuously supervised.

This appliance can be used by children aged from 8 years and above and persons with reduced physical, sensory or mental capabilities or lack of experience and knowledge if they have been given supervision or instruction concerning use of the appliance in a safe way and understand the hazards involved.

Children shall not play with the appliance. Cleaning and user maintenance shall not be made by children without supervision.

The maximum capacity in some cycles for dry clothes to be used is: Wash （13kg） .

The recommended maximum capacity for each program may vary. For optimal results, see "PROGRAM TABLE".

To connect the appliance to water supply, make sure to use the supplied water supply hose and gaskets. Water pressure has to be between 0.1-1 MPa (1-10 bar; 1-10 kp/cm²;10-100 N/cm²).

Always use a new water supply hose to connect the appliance to water supply, do not reuse an old water supply hose.
For appliances with ventilation openings in the base, the ventilation openings must not be obstructed by a carpet.
If the supply cord is damaged, it must be replaced by the manufacturer, its service agent or similarly qualified persons in order to avoid a hazard.

ELECTRICAL SAFETY

This appliance complies with relevant safety standards. Before connecting the appliance to the power mains, wait for at least 2 hours until it reaches room temperature.

This appliance must be repaired by an authorised service center, using only spare parts approved by authorised manufacturers. Any repairs or maintenance related to safety or performance should be conducted by trained professionals.

Do not attempt to repair the appliance by yourself. Repairs performed by unqualified personnel may result in personal injury or more serious error. Please consult your local service center and always insist on genuine spare parts.

Do not attempt to operate the appliance if it is damaged, defective, partially disassembled, or has missing or damaged parts, including damaged wires or plugs.

Do not excessively bend the power cord or place heavy objects on it.

Do not clean the inside or outside the appliance with spray water. In case of flooding, please disconnect the power plug and contact the after-sales service center.

Models with a drying function enable automatic shutdown of the heater to prevent overheating. The heater automatically shuts off when the temperature exceeds the safety threshold and restarts when the temperature drops below the threshold.

Do not connect multiple power sockets, extension cords or dual adapters to the appliance. Do not connect the appliance to the power mains using an extension cord.

Do not connect the appliance to a power socket intended for an electric shaver or hair dryer.

Do not connect the appliance to a power socket intended for small loads.

Before connecting the appliance to the power supply, ensure that the electric voltage specified on the rating plate matches the Voltage of your socket.

The power socket must be securely grounded and the water supply must be unobstructed.

Do not connect the appliance to power mains using an external switching device such as a program timer, or connect it to power mains that is regularly switched on and off by the power supply provider.

Exhaust air must not be discharged into a flue designed to discharge combustion gases or other fuel exhaust gases.

INSTALLATION

Before using the appliance, be sure to remove the packaging (sponge, polystyrene foam, etc.) attached to the bottom of the appliance.

Please install the appliance correctly according to the instructions and connect it to the water and electricity supply (see "INSTALLATION AND CONNECTION").

Water piping and electrical wiring should be carried out by a fully trained technician or professional.

Do not install the appliance in a location where the door opening is restricted.

Do not install the appliance where the temperature may drop below 5°C, as it parts may be damaged in case of water freezing.

Place the appliance on a solid and level floor. If installed on a high platform, the appliance must be reinforced to prevent it from tipping over.

The end of the water discharge hose should reach into a water drain line.

This appliance should not be stored or used outdoors.

Avoid lint accumulation near the appliance.

Do not install the appliance near heaters or flammable materials.

Do not install the appliance in an area where gas leaks may occur.

Ensure good ventilation to prevent the gases generated by the appliance from flowing back into the room and causing a fire.

USAGE

Remove the transport screws/rods before first use, otherwise serious damage may occur when starting the appliance (see chapter "INSTALLATION AND CONNECTION/Remove transport screws/rods"). Such damage is not covered by the warranty.

Check the appliance for damage during transportation. Never operate the appliance if it is damaged.

Use detergents suitable for the appliance and laundry care. We shall not be responsible for any damage or discoloration of gaskets and plastic parts resulting from incorrect use of bleaching or colouring agents.

Do not attempt to remove any panels or disassemble the appliance.

Do not press buttons with sharp objects such as pins, knives, or nails.

Do not touch the power plug or operate the appliance with wet hands.

This appliance is only suitable for regular washing or drying (for tumble dryer models). It cannot be used for dry cleaning.

Attempting to lift the heavy appliance may cause you to get injured. Do not attempt to lift the appliance yourself as your hands may be cut by its sharp edges.

Do not use protruding parts to move the appliance. Protruding parts on the appliance may be broken when lifting or pushing the appliance.

Do not wash laundry with large buttons or other heavy metal objects, and ensure that all pockets of the laundry are empty. To prevent odours and mildew, open the door at the end of the washing cycle to allow the drum to dry.

Do not leave metal objects in the drum for extended periods.

The door glass may be cracked by strong impacts. Handle with care.

Place laundry completely into the drum to prevent it from getting caught in the door.

Cut off the water supply and unplug the power cord when the appliance is not in use.

Do not place any animals (such as pets) into the appliance.

TRANSPORT/TRANSPORT AFTER INSTALLATION

Assemble the transport screws/rods if you need to move the installed appliance (see chapter "INSTALLATION AND CONNECTION/Moving and Transporting After Installation"). Unplug the power cord before assembling the transport screws/rods!

Turn off the tap and unplug the appliance at the end of the washing cycle. Never unplug the appliance by pulling on the power cord. Always hold the power plug firmly and pull it straight out of the socket.

Do not use detergents that contain solvents as this could lead to release of poisonous gases, damage to the appliance, and cause the risk of fire and explosion.

Do not open the appliance door by force while it is operating (High-temperature washing/drying).

Do not use the appliance after cleaning with industrial chemicals.

Water drained during a high-temperature washing cycle is hot. Do not touch the water to prevent burns.

Laundry contaminated with edible oils, acetone, alcohol, petrol, kerosene, detergents, turpentine, wax and wax removers should be pre-washed with hot water and plenty of detergent before placing in the drum.

Use softener or similar products according to the manufacturer's instructions.

Remove all items such as cigarette lighters or matches from pockets.

⚠ DANGER OF HOT SURFACE

At higher washing or drying temperatures, the door glass will heat up. Be careful to avoid burns. Make sure children do not play near the door glass. Do not touch the door glass during operation.

⚠ WATER OVERFLOW PROTECTION (WITH APPLIANCE SWITCHED ON)

If the water level in the appliance rises above normal level, then the excess water level protection will be activated. It will shut off the water supply and start pumping out the water. The program is interrupted and an error is reported.

Do not wash or dry laundry made of foam rubber (latex foam), shower caps, waterproof fabrics, rubber products, or clothing or pillows containing foam rubber pads in the drum.

⚠ WARNING

If your appliance has a drying function, do not interrupt the program until the drying cycle is complete. If you need to inter-rupt it for any reason, carefully remove laundry to avoid burns. Quickly remove laundry and spread it out so that the heat is dissi-pated.

CHILD SAFETY

Before closing the appliance door and running the program, make sure there is nothing except laundry in the drum Make sure no child climbed into the appliance drum and closed the door from the inside.

Do not leave the door open. Children may hang on the door or climb into the appliance, causing damage or injury.

Keep all packaging materials out of the reach of children, as they may pose a danger.

Keep detergent and softener out of reach of children.

SERVICING

Repair costs resulting from damage caused by incorrect connections, improper installation and use, or repairs made by unauthorised personnel are the responsibility of the user and are not covered by the warranty.

The warranty does not cover consumables, minor colour deviations, increased noise due to appliance age that does not affect the functionality of the appliance, and aesthetic defects on compo-nents that do not affect the functionality and safety of the appli-ance.

PRODUCT DESCRIPTION

FRONT

1 Control unit
2 Program selector knob
3 Detergent drawer
4 Door
5 Pump filter cover

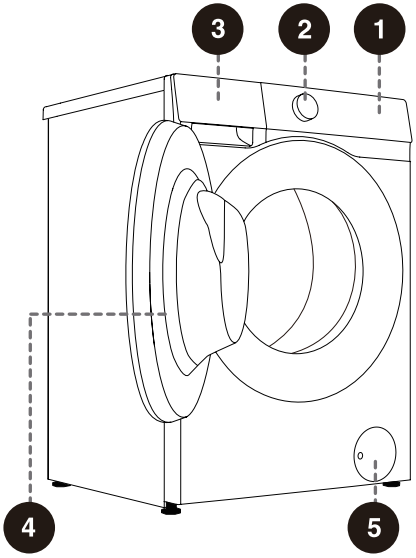

BACK

1 Water supply hose
2 Power cord
3 Water discharge hose
4 Adjustable feet
5 Transport screws/rods

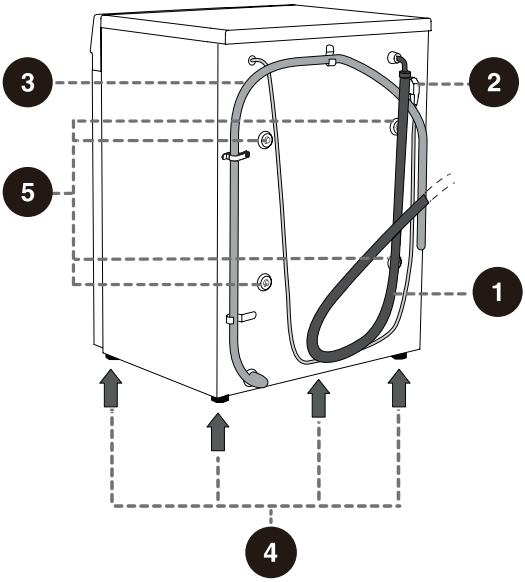

The illustrations in this manual are for illustrative purposes only. Due to product improvements and series expansion, the appearance, color, and functional components of the product you receive may differ from those shown in this manual. Please refer to the actual product.

SPECIFICATIONS

(DEPENDING ON THE MODEL)

Maximum load	13kg
Net weight	71kg
Rated voltage	220-240V~
Frequency	50Hz
Rated power	1550W

DIMENSIONS (MM)

Index	Dimensions (mm)
A	595
B	845
C	615
D	640
E	660
F	1130

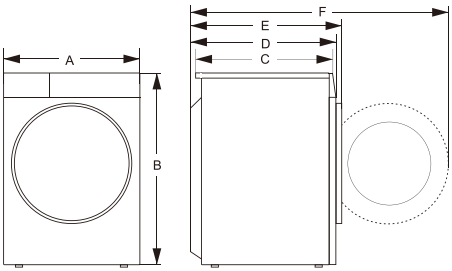

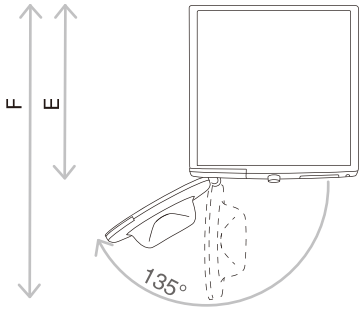

E = appliance depth
F = Depth with door open

INSTALLATION AND CONNECTION

PACKING/PACKAGING

Please first remove all the packaging and foam, especially the foam base. When unpacking the device, please do not use sharp objects to damage it. Keep packaging materials (plastic bags, other plastic parts, etc.) out of reach of children.

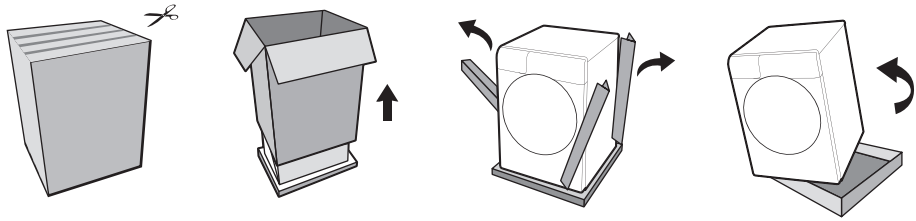

The process of packing the machine is just the opposite of unpacking above.

Please check the device for any damage. If damaged, do not use it, and immediately contact after-sales service.

The accessories included with this appliance include one or more of the following:

- User Manual;
- 4 transport screw covers;
- Water inlet hose;
- Water drain hose bracket;
- Wrench;
- Noise reduction board/sponge strip/none (subject to the actual model).

Different models have different configurations, and the accessories included with this device are subject to the actual configuration of the model.

INSTALLATION METHOD OF THE NOISE REDUCTION BOARD:

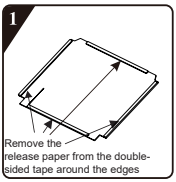

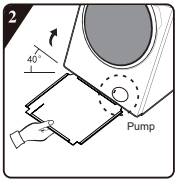

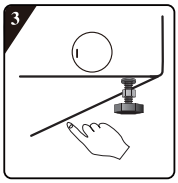

1 Peel off the release paper from the double-sided tape around the bottom cover.

2 Tilt the appliance at a 40° angle, with the right-angle notch facing the front of the appliance as shown in the illustration. Insert the oblique-angle notch between the two foot screws at the rear of the appliance until fully inserted. Close the bottom panel so that it fits tightly against the bottom of the appliance.

3 Press down firmly around the edges of the double-sided tape to ensure the noise reduction board is securely attached to the box.

INSTALLATION METHOD OF THE SPONGE STRIPS:

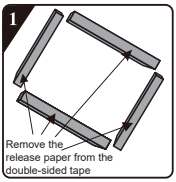

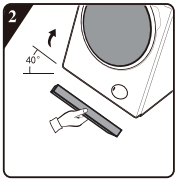

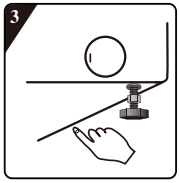

1 Peel off the release paper from the double-sided tape on the sponge strips.

2 Tilt the appliance at a 40° angle, stick 2 long sponge strips on the front and rear support positions at the bottom of the appliance body, and stick 2 short sponge strips on the left and right support positions.

3 Use your hand to press and firmly attach the sponge strips.

REMOVING THE TRANSPORT SCREWS/RODS

⚠ Disassemble the transport screws/rods once all packaging has been removed. A blocked appliance may be damaged when it is switched on for operation. Such damage is not covered by the warranty.

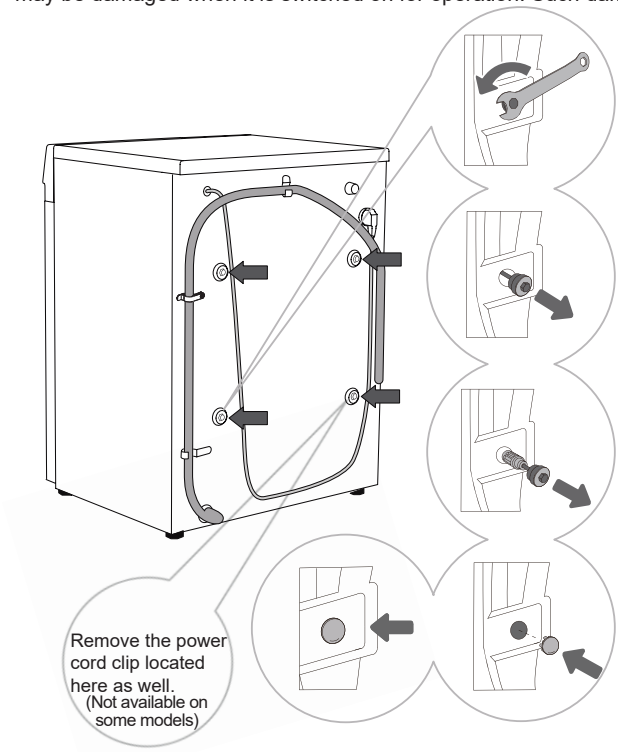

1 Move aside the water discharge hoses and use an appropriate wrench to loosen the four screws on the back in the counterclockwise direction as indicated by the arrows. Loosen the screws approximately 30 mm.

2 Pull all 4 transport screws/rods horizontally.

3 Pull out the transport screws/rods along with the rubber and the plastic parts.

4 Cover the screw holes with plastic plugs. The plastic plugs are supplied in the bag with the appliance user manual (the support set).

Save the transport screws/rods in case you have to transport the appliance again later (to reinstall the transport screws/rods, follow the above procedure in reverse order).

INSTALLATION LOCATION

Place the appliance on a solid and level floor to keep it stable. The floor should be clean and dry; otherwise, the appliance may slide. Also, clean the bottom surface of adjustable feet.

ADJUSTABLE FEET

Use a spirit level and the supplied wrench.

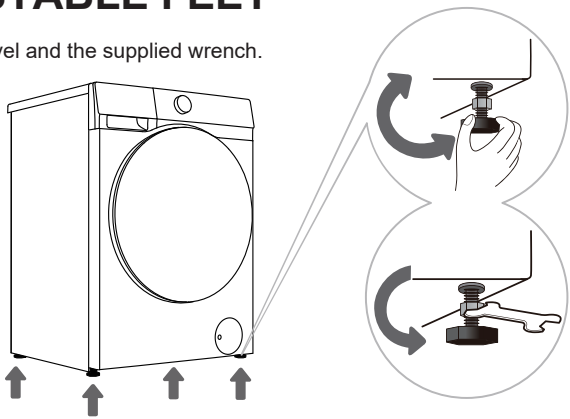

1 Rotate the adjustable feet to level the appliance lengthwise and crosswise. The feet allow levelling by +/-2 cm.

2 After adjusting the height of the feet, use the supplied wrench to securely tighten the locknuts by turning them counterclockwise (see Figure).

Incorrect levelling of the appliance may cause vibration, appliance sliding across the room, and loud operation. Incorrect levelling of the appliance is not subject to warranty.

Sometimes, unusual or louder noise may appear during appliance operation. These are mostly the result of improper installation.

INSTALLATION CLEARANCE

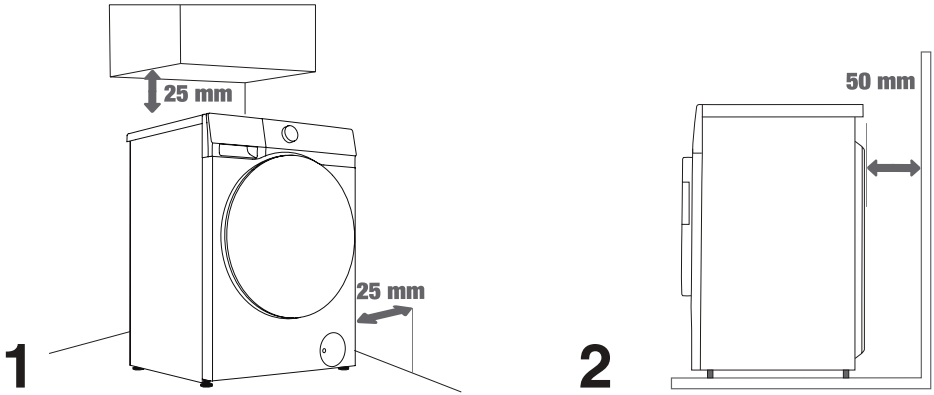

The appliance may not be in contact with a wall or adjacent furniture. For optimum appliance operation, we recommend observing the clearances from the walls as indicated in the figure.
In case of failure to observe the minimum required clearances, safe and correct appliance operation cannot be ensured. Moreover, overheating can also occur (Figures 1 and 2).

CONNECTING TO WATER SUPPLY

The supplied water supply hose varies by model. Please choose the appropriate connection method based on the actual water supply hose.

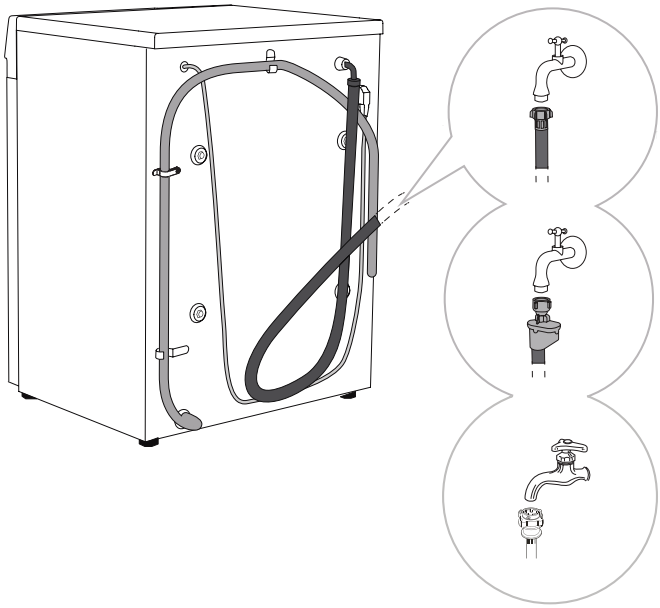

A EUROPEAN WATER SUPPLY HOSE CONNECTION

B AQUA STOP CONNECTION

C CHINESE WATER SUPPLY HOSE CONNECTION

For normal appliance operation, the pressure in the water mains should be between 0.1-1MPa (1-10 bar; 1-10 kp/cm²; 10-100 N/cm²). Minimum dynamic water pressure can be determined by measuring the water flow. In 15 seconds, 3 litres of water should flow from a fully open tap.

Only use the water supply hose supplied with the appliance. Do not use any used or other hoses.

Make sure the hose is not damaged. If the hose is degraded, brittle, or cracked, it has to be replaced.

This appliance is designed for cold water only. Do not connect it to hot water.

EUROPEAN WATER SUPPLY HOSE CONNECTION

Tighten the water supply hose by hand to ensure proper sealing (maximum torque: 2 Nm). Check the sealing for leaks.
Do not use pliers or similar tools as they may damage the nut threads.

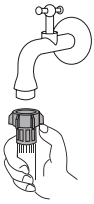

AQUASTOP CONNECTION

If an internal tube or hose is damaged, a shut-off system is activated that cuts the water supply to the appliance. In such case, the control glass (a) will turn red. Replace the water supply hose.

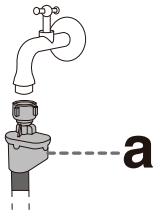

Do not dip the water supply hose with the AquaStop system in water as it contains an electric valve.

The water supply hose can be connected without a non-return valve.

CHINESE WATER SUPPLY HOSE CONNECTION

1. Select a suitable tap with a tip length greater than 10 mm. The outlet end must be flat. If it is uneven, smooth it out with a file to prevent leakage after installation (see Figure 1).
2. Push the slider down to disconnect the water supply hose connector from the inlet assembly (see Figure 2).
3. Loosen the four screws on the water supply hose connector, then attach the hose to the tap. If the tap diameter is too large for the connector, loosen the screws and remove the sleeve (see Figure 3).
4. Evenly tighten the four screws on the water supply hose connector and secure the nuts (see Figure 4).
5. If the appliance is to be used once or several times in a week, push the slider down without disconnecting the water supply hose connector to avoid damaging the fixing screws.

NOTE: The exposed thread length before tightening the nut is approximately 4 mm and less than 2 mm after tightening (Figure 4).

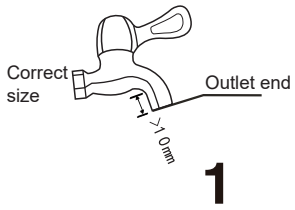

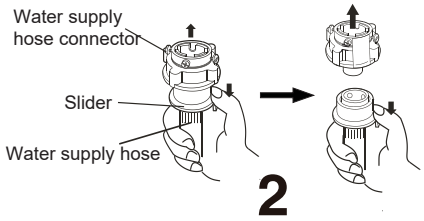

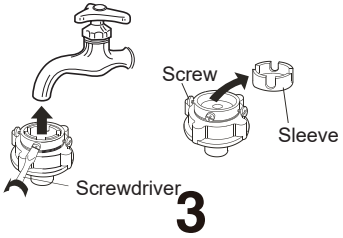

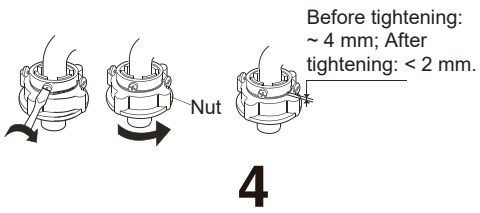

CHECKING THE CONNECTION BETWEEN THE WATER SUPPLY HOSE AND THE TAP

1. Gently pull the water supply hose to check if the connection is secure.
2. Open the tap to check for leaks.
3. The water supply hose should not be twisted or bent.
4. Check the water supply hose before each use to prevent incorrect connection.

CONNECTING THE WATER SUPPLY HOSE TO THE APPLIANCE

Connect the water supply hose nut to the water supply hose connector of the appliance. Tighten the nut and shake it gently to check that it is firmly secured, as shown in the right figure.

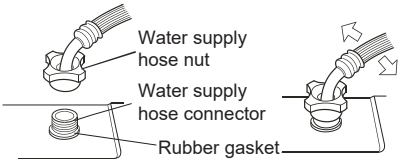

NOTE:

1. Tighten the nut evenly. Avoid rotating the water supply hose, as this may cause damage.
2. Do not remove the rubber gasket. Before each use, check that the gasket is not detached or damaged. If damaged, please contact after-sales service immediately.

CONNECTING AND SECURING THE WATER DISCHARGE HOSE

Feed the water discharge hose into a washbasin or a bathtub, or connect it directly to a drain (discharge hose minimum diameter 4 cm). The vertical distance from the floor to the end of the discharge hose may be 70 to 100 cm. It can be attached in three ways (A, B, C).

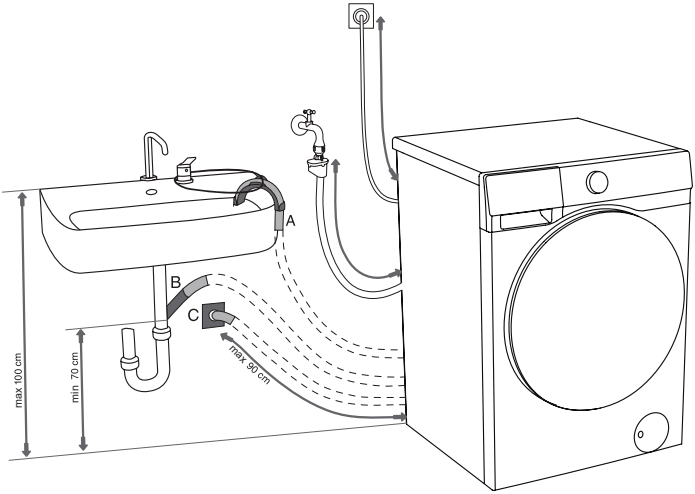

A The discharge hose end may be placed over a sink or a bathtub. Use a string fed through the opening in the elbow support to attach the hose and prevent it from slipping to the floor.

B The discharge hose may also be attached directly to the sink drain. A sink that is too small is not acceptable. Be careful as the drained water may be hot.

C The discharge hose can also be attached to a wall drain with a trap. Such trap should be properly installed to allow cleaning.

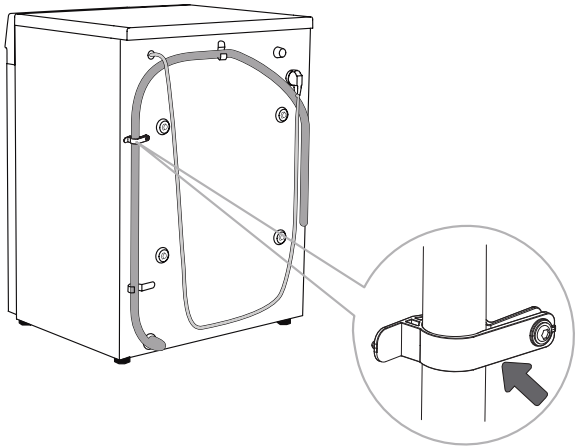

D The discharge hose has to be attached to the clips on the back of the appliance, as shown in the figure.

⚠ These clips must not be removed as this may prevent normal washing.

Make sure the drain hose is not damaged.

If the discharge hose is not correctly attached, safe and correct appliance operation cannot be ensured.

CONNECTING TO POWER MAINS

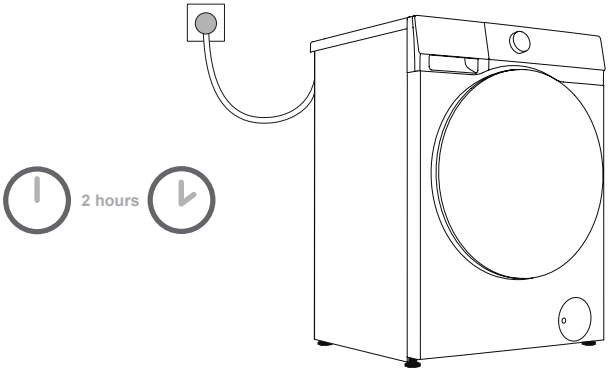

Before connecting the appliance to the power mains, wait for at least 2 hours until it reaches room temperature.
Connect the appliance to a grounded power socket. After installation, the socket should be freely accessible. The socket should be provided with grounding protection. Information on your appliance is indicated on the rating plate.

We recommend using over-voltage protection to protect the appliance in case of a lightning strike.

The appliance may not be connected to the power mains using an extension cord.

Do not connect the appliance to a power socket intended for small loads.

Do not plug or unplug the appliance when your hands are wet.

Any repair and maintenance of the appliance should be performed by trained experts.

A damaged power cord may only be replaced by a person authorized by the manufacturer.

TRANSPORTATION AFTER INSTALLATION

If you need to transport an installed device, first unplug the power plug, turn off the tap, remove the water inlet and drain hoses, and make sure the detergent box and door are closed properly.

Be sure to reinstall the transport screws to prevent vibrations during transport from damaging the device (see "Installation and connection/Removing the transport screws/rods"). If you accidentally lose the transport screws, you can order them from the manufacturer.

Pack all packaging materials (plastic bags, other plastic parts, etc.).

The device is heavy. Please use at least two people to move it. When transporting, do not hold protruding parts such as the door, top cover, etc., to prevent them from falling off or being damaged.

After transport, let the device sit for at least 2 hours before connecting it to the power supply. The device should be installed and connected by trained technicians.

Please read the instructions carefully before reconnecting the device. Damage caused by improper connection or use is not covered by the warranty.

Transport and Handling Method

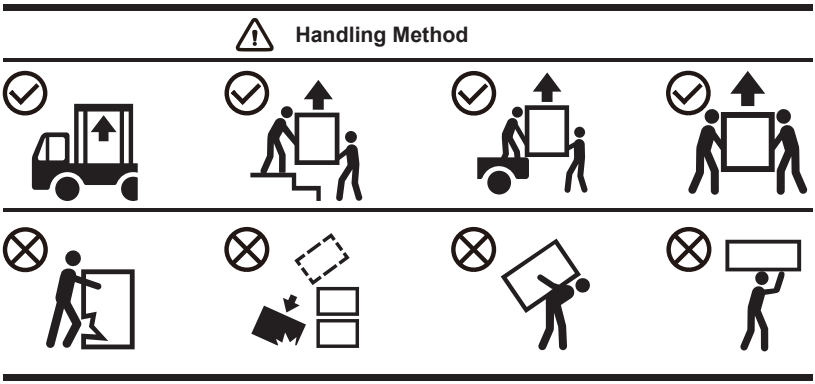

BEFORE USING THE APPLIANCE FOR THE FIRST TIME

FIRST USE

This appliance has been tested at the factory and may contain a small amount of water residue. It is recommended to run a “Drum Clean” (or other high-temperature) program to remove any residual water from the drum.

● Connect the appliance to the power mains and open the water tap. There should not be any laundry in the drum. Select and start the program.

⚠ Do not use any solvents or cleaning agents that could damage the appliance (please observe the recommendations and warnings provided by the cleaning agent manufacturers).

HEED THE LABELS ON THE LAUNDRY

Washing	Max. washing temp. 95°C (95 95)	Max. washing temp. 60°C (60 60)	Max. washing temp. 40°C (40 40)	Max. washing temp. 30°C (30 30)	Hand wash only	Do not wash
Bleaching	Bleaching in cool water (c1)			Bleaching not allowed		
Dry cleaning	Dry cleaning with all agents (A)	Petroleum solvent R11, R113 (P)		Dry cleaning in kerosene, pure alcohol, and R113 (F)	Dry cleaning not allowed	
Ironing	Hot ironing, max. 200°C	Hot ironing, max. 150°C		Hot ironing, max. 110°C	Ironing not allowed	
Drying	Dry flat (place on a flat surface)	Drip dry Line dry		High temperature Low temperature	Do not tumble dry	

PREPARING THE WASHING PROCESS

1. Sort the laundry by type of fabric (cotton, blends, silk, wool, etc.), care label instructions, colour (white, coloured), and soiling.
2. Empty pockets; remove metal items that may damage the laundry or appliance; fasten buttons and turn clothing with buttons or embroidery inside out; close all zippers; tie strings on clothing with drawstrings.
3. Place sensitive clothes and small or lightweight items in a special-purpose laundry washing bag and wash them together with other laundry.
4. Turn items prone to pilling or long-pile fabrics inside out before washing.
5. Stains that are left for too long can be difficult to remove. Treat soiled areas such as cuffs and collars before washing (see chapter "Stain Removal Tips").
6. Do not wash heavy comforters, plush toys, or items in laundry washing bags separately in the drum to avoid imbalance alarms.

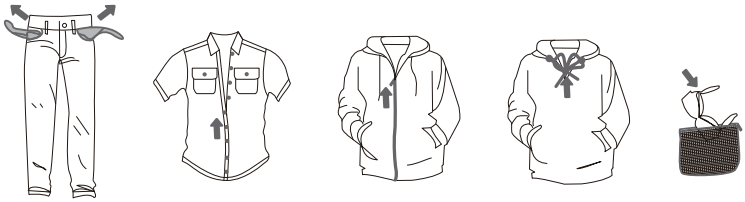

CLOTHES THAT ARE UNSUITABLE FOR BOTH WASHING AND DRYING

Leather or fur products (may cause deformation)	Rayon and its blended fabrics (may cause discoloration or deformation)	Rubber-made or large-sized thick mats (may cause damage or malfunction)
Hats containing hard materials (may damage the washing machine and cause malfunction)	Seat cushions, pillows, items containing cotton wool, foam, and other sponge materials, and carpet covers (may cause damage or malfunction)	Others: Wrinkled or embossed processed clothing; coated down clothing; crepe fabrics; Clothing prone to deformation (suits, jackets, ties, dresses, etc.); Clothes prone to pilling (silk velvet or cotton velvet).

CLOTHES THAT ARE UNSUITABLE FOR DRYING (APPLICABLE TO MODELS WITH A DRYING FUNCTION)

Any clothing marked with any of the above symbols (may damage the clothing)	Woolen clothing (may cause shrinkage and pilling)	Tights and stockings (may cause damage or deformation)	Starched clothing
Mats and fur clothing (may cause damage or malfunction)	Quilt (may cause damage or malfunction)	Clothes with lace and embroidery and new synthetic fibers (ultra-fine fibers) (may cause deformation)	Silk

Non-washable. Dryable/Non-dryable clothes include, but are not limited to, the above-mentioned clothes.

Check the clothing label to confirm that the garment has a machine-washable/dryable symbol.

⚠ Wet clothes that are still dripping are not suitable for drying and may cause the appliance to alarm.

ADDING DETERGENT/SOFTENER

DETERGENT DRAWER

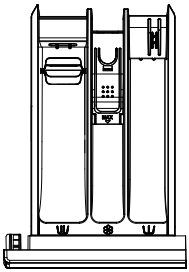

Detergent drawer	
	Prewash dispenser compartment
	Wash dispenser compartment
	Softener dispenser compartment

PRECAUTIONS FOR USE

1. Always use a high-efficiency, neutral, low-foaming detergent suitable for this appliance. The amount of detergent depends on the type, soil level, laundry colour, and washing temperature. Please add the appropriate amount according to the detergent manufacturer's dosage instructions.
2. Excessive amount of detergent may result in foaming that in turn impairs washing efficiency. If excessive foam is detected, the appliance may pause the program for defoaming.
3. Using insufficient detergent may result in poor washing effect and could lead to scale buildup in the drum and water pipes.
4. We recommend adding powder detergent right before the wash cycle starts. If added in advance, ensure the detergent dispenser compartment is completely dry; otherwise, the powder detergent may harden and clump before the wash cycle starts.
5. Do not use liquid detergent when selecting the "Delay" or "Prewash" function (if available) as it will be dispensed immediately and may become sticky in the dispenser compartment or drum.
6. Do not allow detergent to harden, as this may lead to blockages, poor rinsing, or unpleasant odours.
7. Pour softener into the compartment marked with "❀" and follow the usage recommendations on the softener packaging. Do not exceed the MAX line in the softener compartment, as this may cause premature release of softener, resulting in poor washing effect.
8. Keep detergent and softener out of reach of children.
9. Corrosive descaling agents may damage the appliance. Do not use solvents. Do not wash the laundry that was cleaned with solvents or flammable substances.
10. White residues (streaks etc.) on black laundry may appear if you are using modern phosphate-free detergents. In such case, brush the streaks and use a liquid detergent.
11. Before starting the program, gently close the detergent drawer. Forceful closing may cause detergent to spill into other dispenser compartments or to be dispensed too early into the drum. Be careful not to pinch your fingers when closing the drawer.
12. A small amount of water may remain in the dispenser compartment at the end of the program cycle.
13. The detergent dispenser drawer is not designed for adding disinfectants. It is not recommended to use disinfectant. If it is necessary to use disinfectant, be sure to choose a product suitable for clothing, avoid using disinfectants containing strong corrosive or bleaching agents, use it only after thorough dilution, and strictly control the concentration and frequency of use (recommended no more than once a month) to prevent damage to the device or clothing.

Installation/Use of baffle

If your accessories are equipped with baffles, follow the steps below to install the baffles in place for a better detergent dissolution effect when using detergent.

1. Pull out the detergent box.Press the small tab in the detergent box to pull out the detergent box.
2. With the scale line of the baffle facing the operating side, first, insert the two guide posts on one side of the baffle into the slots, then gently pull the detergent box, and finally, insert the two guide posts on the other side into the slots on that side.
3. Slide the baffle forward and downward to lower the baffle.
4. Put the detergent box back into place.

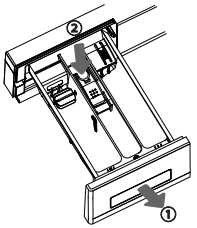

1

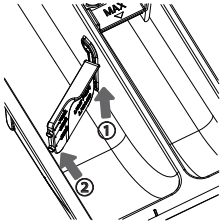

2

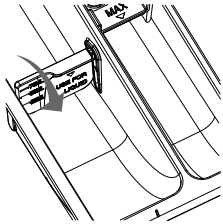

3

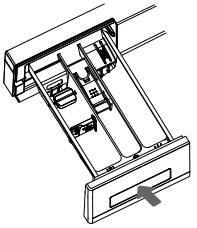

4

When using powder detergent or gel detergent, be sure to remove the baffle to prevent detergent residue.

LOADING THE APPLIANCE

Open the appliance door, and insert the laundry loosely into the drum after making sure the drum is empty.
Close the appliance door. The door is closed when you here a click.

Do not overload the drum! For maximum load, see "PROGRAM TABLE". If the appliance drum is too full, the laundry will not be washed as thoroughly.

Ensure the laundry is completely placed into the drum to prevent it from getting caught in the door.

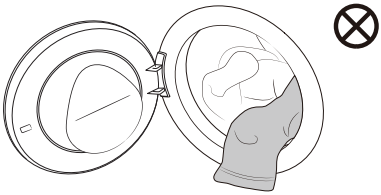

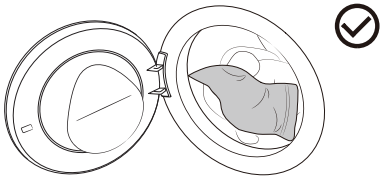

PROGRAMS AND FUNCTIONS

Control Panel

Please refer to the actual product for the final print

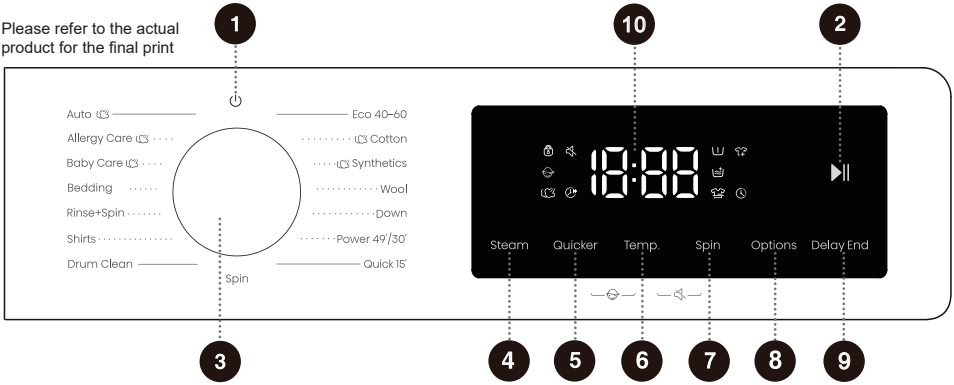

1 Power
Used to turn off the device's power.

2 Start/Pause
Used to start/pause a program.

3 Cycle Selector
Turn the knob to select the program.

4 Steam
Used to turn the steam function of the program on/off.

5 Quicker
This function reduces the program's washing time.

6 Temp.
Set washing temperature.

7 Spin
Set dehydration spin speed.

8 Options
Press this button to select additional functions.

9 Delay End
This function allows you to schedule laundry at your convenience.

5+6 Child Lock
Press and hold these two buttons at the same time to turn on/off the child lock function.

6+7 Mute
Press and hold these two buttons simultaneously to turn on/off the mute function.

10 Display
Used to display the remaining time of the program, reservation time, fault code, and other related information.

PROGRAM TABLE

Turn the main knob to select the appropriate program (depending on the type of clothing and the degree of soiling). During operation, the main knob will not turn automatically.

Program	Maximum load (kg)	Maximum speed (rpm)	Program description
Eco 40-60 **-**	13	1400	This program is suitable for washing cotton clothes that are lightly soiled.
Cotton **(--, 20°C, 30°C, 40°C, 60°C, 90°C)**	13	1400	This program is suitable for washing cotton or linen fabrics that are moderately and heavily soiled.
Synthetics **(--, 20°C, 30°C, 40°C, 60°C)**	6.5	1400	This program is suitable for washing synthetic fabrics with a moderate soil level.
Wool **(--, 20°C, 30°C, 40°C)**	3	600	This program is suitable for washing machine washable woolen clothes (refer to the laundry label requirements).
Down **(--, 20°C, 30°C, 40°C)**	3	600	This program is suitable for machine-washable items filled with down, such as pillows, mattresses, and bed covers, as well as items filled with synthetic fibers.
Power 49'/30' **(--, 20°C, 30°C, 40°C)**	6.5	1400	This program is suitable for washing a small amount of heavily soiled laundry, with an intensive wash cycle in a short period of time.
Quick 15' **(--, 20°C, 30°C, 40°C)**	2	800	This program is suitable for washing a small amount of laundry or lightly soiled laundry. If you change the default setting, the washing time will be longer.
Spin **-**	13	1400	This program is used for separate spinning of laundry. Do not add detergent/softener for this program.
Drum Clean **(90°C)**	/	800	This program is used to clean the drum and remove detergent residues, as well as bacteria that accumulate and grow when washing at low temperatures. Do not add detergent/softener for this program.
Shirts **(--, 20°C, 30°C, 40°C, 60°C)**	3	1400	This program is suitable for washing shirts made of cotton, linen, synthetic fabrics or blends.
Rinse+Spin **-**	13	1400	This program is for separate rinsing and spinning of laundry. Do not add detergent for this program.

Program	Maximum load (kg)	Maximum speed (rpm)	Program description
Bedding (--, 20°C, 30°C, 40°C, 60°C)	3	1400	This program is suitable for washing large-sized clothes, such as curtains, sheets, quilt covers, etc.
Baby Care (40°C, 60°C, 90°C)	2	1400	This program is suitable for washing baby clothes, underwear, etc., and sterilizes them at high temperatures. It is not recommended to add softener for this program.
Allergy Care (60°C)	2	1400	This program is suitable for washing clothes that are resistant to high temperatures and are not easy to fade. It removes allergens such as pollen, mites, parasites, etc. through high temperatures.
Auto (--, 20°C, 30°C, 40°C)	8	1400	This program is suitable for washing garments with a light degree of soiling.

Note
(1) Water temperature: Select the appropriate water temperature according to the selected washing program. When washing, follow the clothing manufacturer's washing label or instructions to avoid damaging the clothing.
(2) The actual water temperature may differ from the stated program temperature.
(3) Test results depend on water pressure, water hardness, inlet water temperature, room temperature, type and amount of laundry, degree of soiling, detergent used, power supply fluctuations and other options selected.
(4) If you add too much laundry during the wash cycle, the laundry may be washed less efficiently because the machine initially detects a lower weight and adds less water. Insufficient water can also cause damage to the laundry and the wash time will be longer.
(5) Drum Clean (if available): The drum must be emptied before using the Drum Clean program. It is recommended to run it at least once a month.
(6) For descaling, use a descaling agent with corrosion protection (only use non-corrosive descaling agents and follow the instructions for use of the descaling agent). Run the "Drum Clean" (or other high temperature) program several times to remove any descaling agent residues and complete descaling. It is recommended to descale at least once every six months.

The maximum or nominal load applies to laundry prepared in accordance with the relevant provisions of standard IEC60456.

For better washing performance, we recommend that you fill no more than 2/3 of the drum volume when using the Cotton program.

ADDITIONAL SETTINGS AND FUNCTIONS

The program comes with default settings, and some functions can be changed by user. You can adjust the settings by pressing the corresponding function button (before pressing the **Start**/Pause button). Some settings cannot be selected or changed in some programs. These settings will not light up, and the buttons are inactive (see "FUNCTION SELECTION TABLE").
Most functions can only be set in standby mode, i.e., before a program starts. After starting the program, most functions cannot be adjusted anymore.

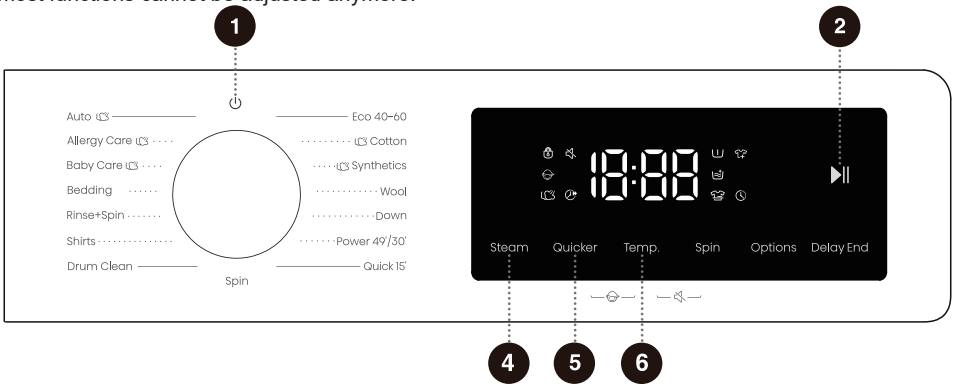

1 Power

Used to turn off the device's power.
During the program, if you need to shut down, turn the main knob to "⏻" to shut down.
In standby mode, when the program ends, if no operation is performed for a certain period, the device will automatically shut down. At this time, you need to turn the main knob to "⏻" to return to the position.

2 Start/Pause

Used to start/pause a program.
The device cannot be started if the door is not closed or the door lock is not locked.

4 Steam

This function can add a steam wash program to the washing process.
Press the button, the "" icon lights up, and the "Steam" function is enabled. Press the button again, the icon lights off, and this function is disabled.
Some programs have the function by default and cannot be canceled.

5 Quicker

This function can shorten the washing time and speed up the washing process.
Press this key. When the icon lights up, the quick wash mode is activated. For each reduction in the time gear setting, the maximum load capacity of the clothes decreases to half of that of the previous gear setting. Press this button repeatedly until the icon turns off to disable this function. The washing time and the maximum load capacity will then return to their initial settings. The selectable acceleration gears may vary depending on the model and program.
For programs with automatic weighing, enabling this function will pause automatic weighing; once disabled, the automatic weighing function will resume.

6 Temp.

This function changes the temperature of the selected program.
Each program has a preset temperature. Before starting the program, press this button to display the current setting temperature for the first time. Press again to cycle through the set temperature gear (-- for cold wash).
The heating temperature that can be set for each program is different.

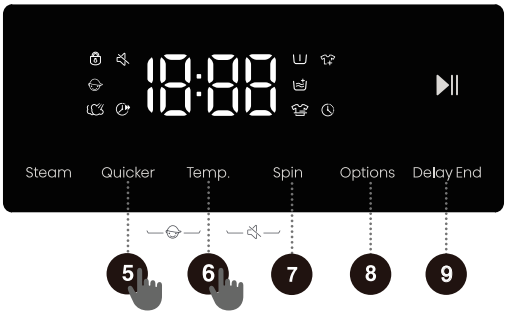

7 Spin

This function can adjust the program's spin speed before the program starts. Press this button to display the current spin speed for the first time. Continue pressing to make a selection in the cycle of the set modes.

8 Options

This function selects additional functions for the current program before the program starts. Each press can only set one function. After the additional function is selected, the corresponding icon lights up or flashes.

Pre-wash

This additional function adds a prewash phase before the main wash to enhance washing performance.
When you select the prewash function, please add detergent to the prewash compartment of the detergent box.

Extra Rinse

This additional function can add an extra rinse cycle to the program.

Anti Crease

The additional function is used to turn on the anti-crease mode. After the program ends, the inner drum rotates intermittently to prevent creases from being generated when clothes are not taken out for a long time.
When the additional function is turned on, the program automatically enters the anti-crease mode at the end. During the anti-crease function, pressing any button or turning the knob will end this function. If no operation is performed, the program will automatically end after a maximum of 12 hours by default. When the dehydration speed is set to "0", the anti-crease function cannot be set.

9 Delay End

This function allows you to schedule laundry at your convenience.
After selecting the program and function, make a reservation. Press this button to start the reservation, and press it again to cycle through the available options. Each press adjusts the time by 1-hour increments. The maximum selectable time is 24 hours.
The reservation time is the end time of the program, including the entire program running time, so the reservation time must be greater than the program running time.
After selecting the delay end time, press the **Start**/Pause button to start the Delay End process.
When the reservation process is in progress, the icon "" on the display lights up or flashes.
When the reservation process finishes, the icon goes off.
If the Delay End function has been selected before the program starts, it can be canceled by selecting another program or function button.
After the program is started, if you need to cancel the Delay End function, you need to shut down and restart.

5 + 6 Child Lock

To prevent children from operating the device accidentally and protect their safety, this device is equipped with a Child Lock function.
Press and hold the "Quicker+Temp." buttons simultaneously, and the Child Lock icon "" will light up, indicating that the Child Lock function is enabled. The same operation can be used to disable the Child Lock.
After the Child Lock function is set, all buttons except the power knob are locked.
After the program ends, the child lock function is automatically cancelled.

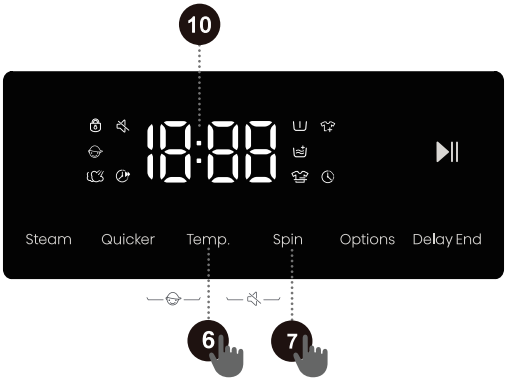

6 + 7 Mute

This function can mute all prompt sounds except the alarm sound.
When the device is in standby, paused, or running, press and hold the "Temp." + "Spin" buttons simultaneously. The "" icon lights up and the Mute function is enabled. Except for the alarm sound, all other device sounds are muted.
The same operation can disable the Mute function, and all prompt sounds will be reactivated.

10 Display

Used to display the remaining time of the program, reservation time, fault code, and other related information.

Icon description

	Door lock indicator icon. When the door lock is locked, this icon lights up. Do not force the door open at this time to avoid causing injury.
	Add Clothes icon. When this icon lights up, it indicates that you can open the door to add clothes.

FUNCTION SELECTION TABLE

Program	Steam	Quicker	Temp.	Spin	Pre Wash	Extra Rinse	Anti Crease	Delay End	Child Lock	Mute
Eco 40-60	–	–	–	•	–	–	–	•	•	•
Cotton	•	•	•	•	•	•	•	•	•	•
Synthetics	•	•	•	•	•	•	•	•	•	•
Wool	–	–	•	•	–	•	–	•	•	•
Down	–	–	•	•	–	•	•	•	•	•
Power 49'/30'	–	•	•	•	•	•	•	•	•	•
Quick 15'	–	–	•	•	–	•	•	•	•	•
Spin	–	–	–	•	–	–	•	•	•	•
Drum Clean	–	–	–	–	–	–	–	•	•	•
Shirts	–	–	•	•	–	•	•	•	•	•
Rinse+Spin	–	–	–	•	–	•	•	•	•	•
Bedding	–	–	•	•	•	•	•	•	•	•
Baby Care	○	•	•	•	•	•	•	•	•	•
Allergy Care	○	–	–	•	•	•	•	•	•	•
Auto	•	–	•	•	•	•	•	•	•	•

• Function optional
– Function not optional
○ Function default and cannot be canceled

START THE PROGRAM

Select the program and additional functions, and make sure that the detergent has been added to the detergent box. Press the "**Start**/Pause" button to start the program.

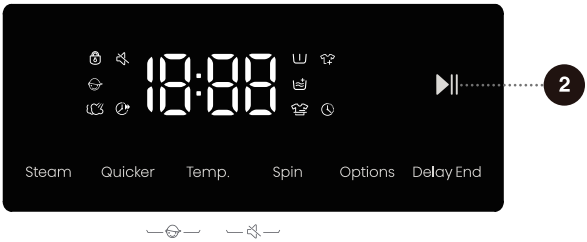

After pressing the " **Start**/Pause" button, other settings cannot be changed except turning Child Lock on/off, turning Mute on/off (if available), and adjusting Water Level (if available).
When the program starts, if the display shows "---", it indicates that the clothes are being weighed.

Some programs automatically detect the weight of clothes before washing, and the program duration will be automatically adjusted.

END OF THE PROGRAM

When the program finishes, the device emits an acoustic signal and "End" appears in the display.
If you do not perform any operation for a period of time, the device will automatically shut down.

1. Turn off the device's power.
2. Turn off the water tap.
3. Unplug the power cord from the outlet.
4. Open the machine door.
5. Remove the clothes from the drum.

PROGRAM INTERRUPTIONS AND CHANGES

Cancel program

To cancel a program while it is running, you need to turn off the device power.

Change program

If you want to change the program while it is running, you need to turn off the power of the device first; After powering on, reselect the program and additional functions, and press the "**Start**/Pause" button to start.

Pause the program

You can press the "Start/**Pause**" button to pause the program at any time during the program operation. When the remaining program time on the display flashes, the program is paused. If the following conditions are met, the door lock is unlocked and the machine door can be opened.
1. The temperature in the drum must be suitable;
2. The water level in the drum must be below a specific value.
To resume the program, please close the door first, and then press the "**Start**/Pause" button. The wash program is paused and started again, and the program continues from where it was interrupted. The spin program is paused and restarted, and the program starts from the beginning of the spin cycle;

Add Clothes

If you need to add clothes during the program, after confirming that the water level and temperature in the machine are safe, press the "Start/**Pause**" button to pause the program. The remaining program time on the display will flash, and the door lock icon will go out (the "Add Clothes" icon "" will light up for some models), and then you can open the door to add clothes. If the door lock icon does not go out, the door opening conditions are not met and you cannot add clothes.

If too much extra clothing is added during the washing process and the amount of water is insufficient, the cleaning effect will be poor, because the device calculates the amount of water intake based on the weight of the initial clothing. Insufficient water may also cause damage to the clothing (due to friction), and the washing time will be prolonged.

Fault

If the device fails, the program will be interrupted.
If this happens (see "FAULT CODES AND TROUBLESHOOTING"), the device will sound an alarm with a flashing light and a beep, and the fault code (FXX) will appear on the display.

Power failure

In the event of a power failure (blackout), the washing program will be interrupted. When the power supply is restored, the program will continue running from the stage where it was interrupted.

If there is still water in the appliance after a power outage, do not open the door before manually draining the water using the drain pump filter.

MAINTENANCE AND CLEANING

Regular maintenance can extend the service life of the appliance. Before maintenance, unplug the appliance from the power mains and close the water tap.

Children should not clean the appliance or perform maintenance tasks without proper supervision.

CLEANING THE DETERGENT DRAWER

Clean the detergent drawer regularly.

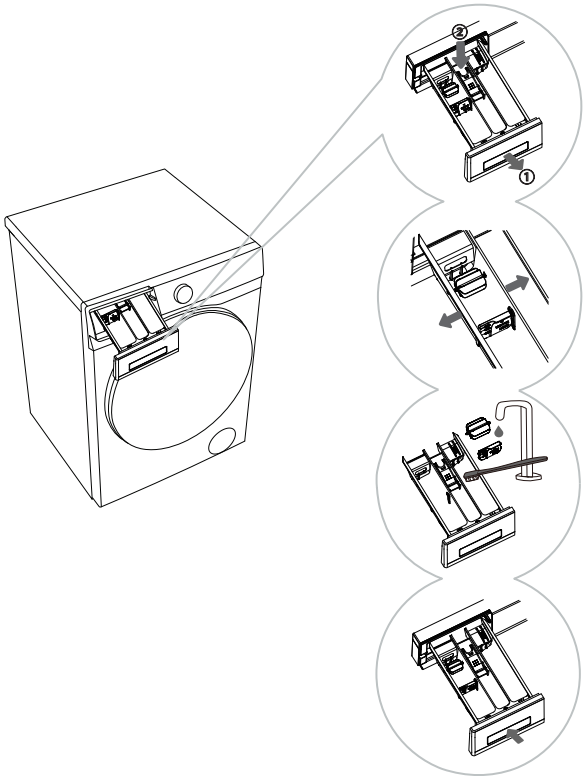

1 Pull out the detergent box. Press the small tab in the detergent box to pull out the detergent box. (Refer to the position indicated by the arrow in the left figure.)

2 Gently bend the main wash compartment of the detergent box by hand to slightly deform it, and remove the baffle and roller.

3 Use a brush to clean the baffle, roller, and detergent box separately.

4 Clean any remaining detergent from the bottom of the detergent box and wipe it dry. After wiping the baffle and roller dry, reinstall them in their original positions and reinstall the detergent box into place.

When installing the roller, please ensure that the positioning posts at both ends of the roller match the positioning holes of the detergent box.

Do not place the detergent box in the dishwasher for washing.

CLEANING THE WATER SUPPLY HOSE, DETERGENT DISPENSER HOUSING, AND RUBBER DOOR GASKET

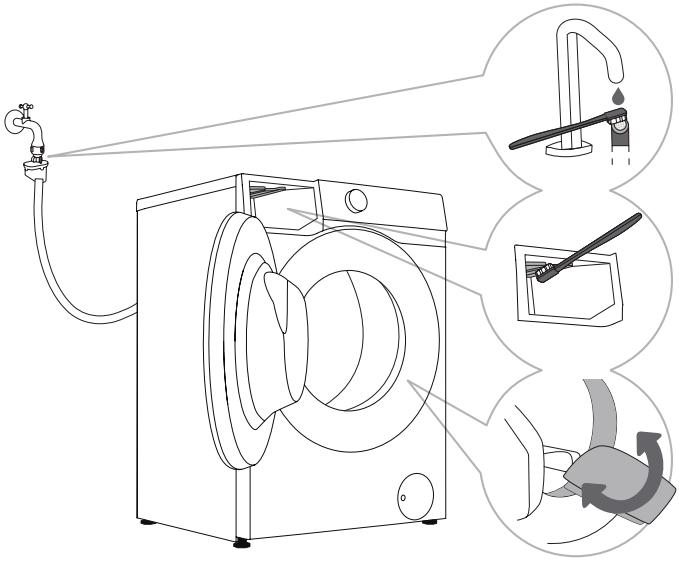

1 Clean the water supply hose filter regularly.

2 Use a brush to clean the entire detergent dispenser housing, especially the nozzles on the top.

3 After every wash, wipe the rubber door seal to extend its life cycle. To prevent mould growth on the seal, leave the door slightly open after washing to allow moisture to evaporate before closing the door.

CLEANING THE PUMP FILTER

Water may be spilled when cleaning the pump filter. It is therefore recommended to place an absorbent cloth on the floor.

Make sure the water has cooled down before you release it from the appliance.

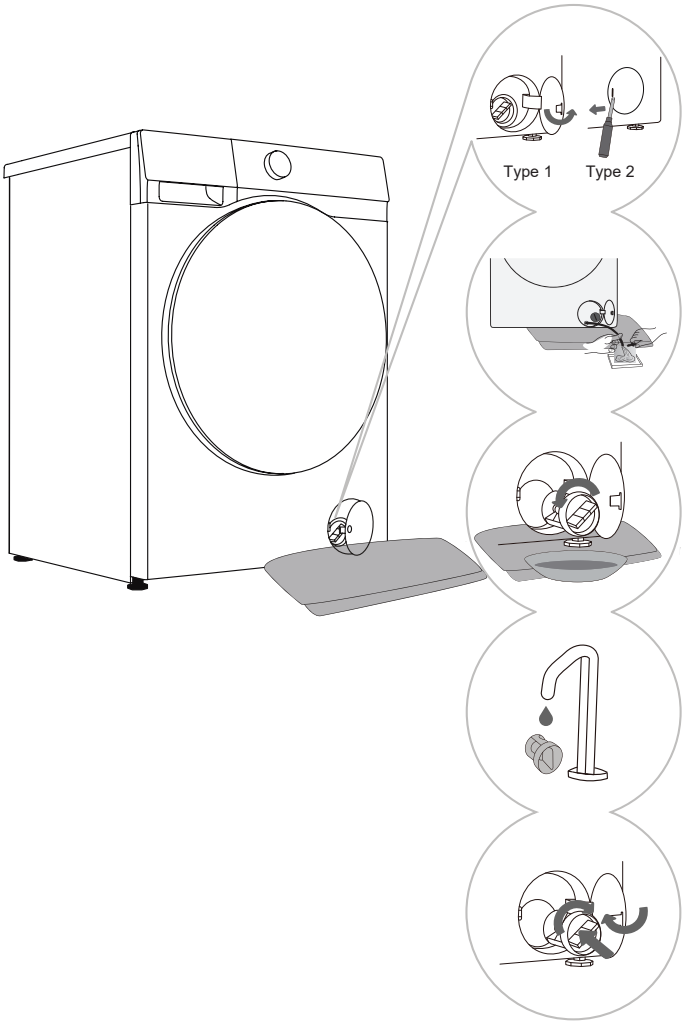

1 Open the pump filter cover.Type 1: Press the pump filter cover to pop it open.Type 2: Use a suitable tool (flathead screwdriver or similar) toOpen the pump filter cover. (The type varies depending on the model.)

2 Place a towel under the filter cover. If the appliance is provided with a drain hose, place the end of the hose into a container. Rotate the drain hose plug until it loosens and remove it to allow the water to drain naturally. Then reinstall the drain hose plug. If no drain hose is equipped, place a container under the pump filter. (The type varies depending on the model.)

3 Slowly rotate the pump filter counterclockwise. Pull out the pump filter to allow the water to drain slowly.

4 Clean the pump filter under running water.

5 Reinstall the pump filter as shown in the figure and tighten it by rotating it clockwise. For a good seal, the filter gasket surface should be clean.

It is recommended to clean the drain pump filter every two months.

It is recommended to clean the drain pump filter every time you wash items such as quilts and bath towels that are prone to shedding.

Also clean the pump filter if the appliance cannot start the spinning cycle or when there is debris in the pump (buttons, coins, hair pins or clips etc.).

Do not open the pump filter while the appliance is running. Do not operate the appliance until the pump filter is securely installed to avoid leaks or malfunctions.

CLEANING THE INLET FILTER

Check and clean the inlet filter regularly.
Clean the inlet filter immediately if water supply is slow.
Operation procedures are as follows:

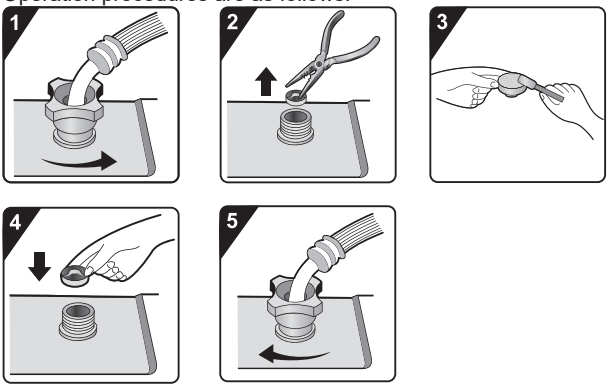

1 Close the water tap and unscrew the water supply hose.

2 Remove the inlet filter.

3 Clean the inlet filter.

4 Reinstall the inlet filter.

5 Connect the water supply hose. Open the water tap and ensure there are no leaks at the connection.

The inlet filter collects impurities and sediment from the water supply. It is recommended to clean it at least every six months, or more frequently if you have hard water or notice scale buildup.

CLEANING THE OUTSIDE OF YOUR WASHER

Before cleaning the outside of your washer, please be sure to disconnect the machine from the power supply.

Clean the outside of your washer and the control panel with a soft, damp cloth. Then wipe them dry with a soft dry cloth.

Do not use any solvents or cleaning agents that could damage the appliance (please observe the recommendations and warnings provided by the cleaning agent manufacturers).

Clean the appliance door with a damp cloth, and then wipe it dry with a soft, dry cloth.

Do not use excessive water to clean the appliance.

TROUBLESHOOTING

The appliance is equipped with a number of automatic safety features to detect faults and take effective safety measures in a timely manner.
These faults are usually minor and can be rectified quickly.
If the appliance cannot operate normally, a fault message will appear on the screen. Please refer to the warning message for the appropriate action.
If the recommended troubleshooting methods do not resolve the problem, please contact after-sales service.
The user will assume all liability for any consequences arising from repairs carried out by themselves or unauthorised personnel.

Fault phenomenon	Recommended countermeasures
Machine fails to start	◇ Check whether the power cord is plugged into the socket and whether the socket is working functionally (by testing it with another appliance). ◇ Check whether the door is properly closed. ◇ Check whether the “**Start**/Pause” button is pressed.
The device stops operating under normal working conditions	◇ Check if the machine door is closed properly. If not, close the door and press the "Start/Pause" button. ◇ Check for excessive foam. When the device detects excessive foam, it will enter a draining or standby state, or water will be taken to eliminate foam for defoaming treatment. The program is paused during this process, and the time displayed on the screen remains unchanged. After defoaming is completed, the device will automatically resume operation. If foam overflows and leaks, wipe away the foam to prevent corrosion of the device. ◇ Check if the device has activated the alarm protection.
Time displayed at the start of the program increas-es or decreases	This is the adaptive adjustment of the appliance to the factors that influence the washing time. ◇ Excessive foam. ◇ Unbalance caused by large laundry. ◇ Extended heating time due to low water intake temperature. As a result of these factors, the remaining time displayed is recalculated and updated accordingly (if the appliance is making an unbalance adjustment, the time displayed remains unchanged). In addition, the appliance detects the load during the water supply and adjusts the program time accordingly (fuzzy control).
Residual detergent or other additives in the detergent drawer after washing	◇ Check whether the detergent drawer is correctly installed and kept clean. ◇ Check whether the water pressure is normal and whether the inlet filter is clogged (see chapter “MAINTENANCE AND CLEANING”).
Odour in the machine	◇ The odour may be caused by the rubber materials inside the appliance. It is the rubber smell, which dissipates after a few uses.

The warranty does not cover the faults or failures resulting from external factors (lightning strike, power grid failures, natural disasters etc.).

Fault phenomenon	Recommended countermeasures
Abnormal sound/noise during washing	◇ Foreign objects such as keys, coins or pins may have fallen into the drum. Stop the appliance and check for foreign objects in the drum. If noise persists after restarting, please contact after-sales service. ◇ Laundry may be unevenly distributed in the drum. Pause the program, unlock the door, and redistribute the laundry.
Intense vibrations during spinning	◇ Check whether the appliance is level and whether all four feet are firmly seated on the floor. ◇ Check whether the transport screw/rods have been removed. Transport screw/rods must be removed before using the appliance. ◇ Check whether all foam supports have been removed from the bottom of the appliance.
Poor spinning effect	The appliance is equipped with a balance detection and correction system. After detecting unbalance caused by heavy laundry (e.g., bathrobes) and several spinning attempts, the system automatically reduces the spinning rate or even stops the spinning process to protect the appliance. ◇ If the laundry is still very wet after spinning, take the laundry out of the drum, shake it loose, and then select the spinning program again. ◇ Excessive foam may impair the spinning effect. Make sure to use an appropriate amount of low-foaming detergent. ◇ Check whether the speed selection is set to "0" or "No Spin".
Water leakage	◇ Leak from the water supply hose. Check the connection between the tap and the water supply hose connector for leaks. If there is a leak, wrap sealing tape around the end of the tap or replace the tap. It is recommended to check the connection between the water supply hose connector and the inlet valve for tightness. Tighten the connection to eliminate leaks. ◇ Leak from the drain hose. For top-drain models, the drain hose clips must not be removed as this will result in a continuous water discharge. ◇ Leak from the detergent drawer. The detergent drawer is not closed tightly. Push the handle to close the detergent drawer tightly. ◇ Leak from the door seal. Check the door seal for foreign objects and clean if necessary.
Wrinkled laundry	◇ The laundry is not removed promptly from the drum. After the wash cycle is completed, remove the laundry from the drum promptly. ◇ The appliance is overloaded. The drum should not be full of laundry and the door should be easy to close. ◇ The spinning rate is too high. Set a suitable spinning rate for the type of laundry.

DRY FAULT (FOR TUMBLE DRYER MODELS)

Fault phenomenon	Recommended countermeasures
appliance does not carry out drying process	◇ Check whether the drying program is set up. ◇ Check whether the water tap is unopened. ◇ Check whether the door is properly closed. ◇ Check whether the load is excessive (see PROGRAM TABLE for capacity requirements), and take out part of the laundry to dry again.
Poor drying effect	◇ Check whether the load is excessive. If so, it will cause unsatisfactory drying effect and increased wrinkling. Separate the laundry in the drum for individual drying. ◇ Check if heavier items (e.g., thick cotton) are mixed with lighter ones (e.g., synthetic fabrics). ◇ Dry laundry separately by type.
Excessive drying time	◇ Check whether the load is excessive (see PROGRAM TABLE for capacity requirements), and take out part of the laundry to dry again. ◇ Laundry is not sufficiently spun (see section “Poor spinning effect" for guidance). ◇ A large amount of thicker laundry (e.g., jeans).
Odour during drying	◇ Using detergents or softeners with strong chemical odours may cause odours during drying. ◇ If the appliance is not thoroughly cleaned, residual dirt may produce odours while drying. Clean the appliance regularly (see chapter “MAINTENANCE AND CLEANING”) and promptly remove laundry after drying.

FAULT CODES AND TROUBLESHOOTING

If the unit is not operating normally and the following codes are displayed, this may not indicate a fault. Please refer to the FAULT CODES for appropriate action.

Problem/Fault	Description	What to do?
F01	Water inflow fault	Check the following: 1. Is the water tap is open? Is the pressure too low? 2. Is the water supply hose pinched? 3. Is the Inlet filter clogged? 4. Is the water supply hose frozen? After troubleshooting is finished, press the "Start/Pause" button to continue operation.
F03	Water discharge fault	Check the following: 1. Is the drain hose pinched? Does the water flow through the hose? 2. Whether the filter at the draining pump is blocked? 3. Is the drain hose frozen? After troubleshooting is finished, press the "Start/Pause" button to continue operation.
F24	Overflow	Pause and restart the program. If the appliance continues to overflow, close the water tap and contact a service technician.
F13	Door locking fault	Door is closed, but it cannot be locked. Switch the appliance off and on again. Then restart the washing program. If the fault persists, contact a service technician.
F14	Door unlocking fault	Door is closed, but it cannot be unlocked. Switch the appliance off and then back on. If the fault persists, contact a service technician.
Other	Electronic module fault	Switch the appliance off and then back on. Restart the washing program. If the fault persists, contact a service technician.
Unb	Unbalance alarm	Unbalance alarm shall be solved by the following methods: 1. Laundry tangling If the laundry is tangled, first switch off the appliance, open the door, shake the laundry loose and put it back in the drum. Then close the door and select the spinning program again. 2. Underweighted laundry Switch off the appliance, open the door and load additional laundry (or one or two towels). Then close the door and select the spin program again.
F15-F18	Abnormal drying (for tumble dryer models)	Turn the appliance off and then turn it on. If the fault still exists, please contact a service technician.

SERVICING

BEFORE CALLING A SERVICE TECHNICIAN

When you contact the service centre, please specify your appliance model.

The model, code / ID, type and serial number are indicated on the nameplate of the appliance.

⚠ In case of a defect, only use spare parts approved by authorised manufacturers.

Repairs or warranty claims due to incorrect connections or misuse of the appliance are not covered by the warranty. In such cases, the cost of repair shall be borne by the user.

USAGE RECOMMENDATIONS

When washing colored clothes for the first time, wash them separately by color.

Wash heavily soiled laundry in smaller amounts, with increased powder detergent or a Prewash cycle (if available). Apply a special-purpose stain remover on stubborn stains before the wash. We recommend referring to “stain removal tips”.

If you often wash laundry at low temperatures and with liquid detergents, bacteria may develop and cause odour in the appliance. To prevent such odour, we recommend running “Drum Clean” (or other high-temperature programs) from time to time.

We recommend avoiding washing very small amounts of laundry as this will lead to excessive use of energy and poor appliance performance.

Loosen any folded or tangled laundry before putting it into the drum.

Only use detergents for appliance.

If water hardness exceeds 14°dH, water softener should be used. Heater damage resulting from incorrect use of water softeners shall not be covered by the warranty. Check the information on water hardness with your local water supply company or authority.

Use of chlorine-based bleaches is not recommended as they can damage the heater.

If you use a descaling agent, bleach, or dye, only use the kind that is suitable for use in the appliance.

Do not use solvents or similar chemicals (e.g., paint thinner, turpentine, gasoline).

Do not add hardened lumps of powder detergent into the detergent dispenser as this may clog the piping in the appliance.

Powder or liquid detergent should be added according to the manufacturer's instructions, washing temperature, and selected program.

When using concentrated liquid laundry care products, we recommend diluting them with water to prevent clogging the detergent drawer drain.

Liquid detergent is suitable for washing program without a prewash cycle.

Exercise caution to avoid mixing detergent and softener.

At higher spinning rates, there will be less residual moisture in the laundry. As a result, drying in a tumble dryer will be more economical and faster.

STAIN REMOVAL TIPS

Before using special-purpose stain removers, try using the natural methods that do not harm the environment on less stubborn stains. However, timely treatment makes stain removal easier! Remove stains by rinsing with cold (lukewarm) water - but never with hot water!

Stains	Stain removal
Mud	When the stain is dry, first scrape it off the laundry before washing it in the appliance. If the stain is stubborn, soak it with an enzyme-based stain remover before the wash. If the stain is not stubborn, wash the laundry with liquid or powder detergent and water before the wash.
Antiperspirant	Before washing in the appliance, apply liquid detergent onto the laundry. Apply stain removers on any stubborn stains. Alternatively, use oxygen-based bleach for the wash.
Tea	Soak or rinse the laundry in cold water and add stain remover if necessary.
Chocolate	Soak or rinse the laundry with lukewarm soapy water. Then, apply lemon juice and rinse.
Ink	Before washing in the appliance, apply stain remover on the stain. You may also use denatured alcohol. Turn the laundry inside out and place a paper towel under the stain. Use the alcohol on the back side of the stain. At the end of the process, thoroughly rinse the laundry.
Felt tip pens	Dilute some starch in water and apply it to the stain. When it dries, scrape it off with a brush. Then, put the laundry into the appliance to wash.
Baby (urine, mud, food stains)	Before washing in the appliance, soak the stains in lukewarm water for at least half an hour. For easier stain removal, add an enzyme-based stain remover.
Grass	Before washing in the appliance, soak the laundry in an enzyme-based stain remover. Grass stains can also be removed by soaking (for approx. 1 hour) in diluted lemon juice or distilled vinegar.
Egg	Soak the laundry in an enzyme-based stain remover. Soak in cold water for at least 30 minutes, or a few hours if the stains are stubborn. Then, wash in the appliance.
Coffee	Soak the laundry in salt water. If the stain is not fresh, soak it with a mixture of glycerine, ammonia and alcohol.
Shoe polish	Apply cooking oil to the stain and rinse.
Blood	Fresh stain - Rinse the laundry with cool water and wash it in the appliance. Dried stain - Soak the laundry in an enzyme-based stain remover. Then, wash in the appliance. If the stain does not vanish, try to remove it with a bleach suitable for your laundry.

Stains	Stain removal
Glue, chewing gum	Place the laundry in a bag and put it in the freezer until the stain hardens. Then remove it with a blunt knife. Dilute the stain with a prewash stain remover and rinse thoroughly. Finally, wash the laundry in the appliance.
Makeup	Use a stain remover for the prewash, then wash in the appliance.
Butter	Before washing in the appliance, apply stain remover onto the laundry. Then, rinse with hot water (as hot as the fabric allows).
Milk	Soak the laundry in an enzyme-based stain remover. Soak for at least 30 minutes, or a few hours if the stains are stubborn. Then, wash in the appliance.
Fruit juice	Apply a mixture of salt and water on the stain. Leave to take effect for a while, then rinse. You can apply sodium bicarbonate, distilled vinegar or lemon juice on the stain before washing in the appliance. For old stains, use glycerine. After 20 minutes, rinse with cold water. Finally, wash the laundry in the appliance.
Wine	Soak the laundry in cold water for at least 30 minutes. Also, use a stain remover. Then, wash in the appliance.
Wax	Put the laundry into the freezer until the wax hardens. Then, scrape it off. Remove the remaining wax by placing a paper towel onto the stain, and then heat it with an iron until the paper absorbs the wax.
Sweat	Before washing in the appliance, rub liquid detergent thoroughly into the stain.
Chewing gum	Put the laundry into the freezer until the chewing gum hardens. Then, wash in the appliance.

DISPOSAL

Packaging is made of environmentally friendly materials that can be recycled, disposed of, or destroyed without any hazard to the environment. To this end, packaging materials are labelled appropriately.

The symbol on the product or its packaging indicates that the product should not be treated as normal household waste. Take the product to an authorised collection centre for waste electric and electronic equipment processing.

When disposing of the appliance at the end of its useful life, remove all power cords, and destroy the door latch and switch to prevent the door from locking or latching, and to prevent children or small animals from becoming trapped inside and causing a hazard.

This appliance is marked according to the European directive on waste (WEEE).

Correct disposal of the product will help prevent any negative effects on the environment and health of people, which could occur in case of incorrect product removal. For detailed information on removal and processing of the product, please contact the relevant municipal authority in charge of waste management, your household waste disposal service, or the store where you bought the product.

TYPICAL CONSUMPTION TABLE

Programme Instructions

1. The Eco 40-60 programme is able to clean normally soiled cotton laundry declared to be washable at 40°C or 60°C, together in the same cycle, and that this programme is used to assess the compliance with the EU ecodesign legislation.
2. The power consumption of the off-mode is 0.49W.
3. The most efficient programmes in terms of energy consumption are generally those that perform at lower temperatures and longer duration.
4. Loading the household washing machine up to the capacity according to the indication for the respective programmes will contribute to energy and water savings.
5. Correct use of detergent, softeners and other additives. Do not apply excessive detergent. This may affect the washing results adversely.
6. Periodic cleaning,including optimal frequency, and limescale prevention and procedure.
7. Noise and remaining moisture content are influenced by the spinning speed: the higher the spinning speed in the spinning phase, the higher the noise and the lower the remaining moisture content.
8. The product information and QR code are reflected in the energy consumption label the product registration information can be obtained by scanning the QR code.
9. The information of standard programmes.

Programme	Selected Temperature (℃)	Rated Capacity (kg)	Maximum temperature in drum (℃)	Program duration (h:min)	Energy consumption (kWh/cycle)	Water consumption (litres/cycle)	Remaining moisture content (%)	Maximum speed reached (rpm)
Eco 40-60 full load	-	13.0	35	3:59	0.990	80.0	53.90	1310
Eco 40-60 half load	-	6.5	27	3:00	0.485	50.0	53.90	1400
Eco 40-60 1/4 load	-	3.5	24	2:40	0.263	40.0	53.90	1400
Cotton	20	13.0	20	2:09	0.390	160.0	57.00	1400
Cotton	60	13.0	55	3:38	2.500	160.0	57.00	1400
Synthetics	40	6.5	40	2:45	1.300	120.0	35.00	1400
Quick 15'	20	2.0	20	0:15	0.085	40.0	75.00	800

The values given for programmes other than the Eco 40-60 programme are indicative only.

Maximum or nominal load applies to laundry prepared pursuant to the IEC 60456 standard.

Due to deviations in terms of type and amount of laundry, spinning, power supply oscillation, and environment temperature and humidity, the programme duration and power consumption values measured at the end user may differ from the ones stated in the table.

We reserve the right to any changes and errors in the instructions for use.

Hisense

life reimagined

20281939-N6020032210A