AEG

6000 CombiQuick Microwave and Built-in Oven

GK6NK40FB



Great results in half the time
The 6000 CombiQuick® CombiOven uses hot air circulation with microwave technology to provide cooking in half the time without sacrificing flavour. You can also grill, roast and bake – all in one.

Product Benefits & Features



Microwave with Hot Air. For better and faster heating
Microwave with hot air provides dual functions – microwave and convection cooking, which merges hot air circulation and advanced microwave technology so your food is cooked faster and more evenly.



EXPlore. Easy access to your oven's functions
EXPlore allows you to effortlessly control the settings of your oven to know what's happening with your cooking. With the LED display and WiFi connectivity, you can easily see the time, temperature and progress of your dish.

Assisted Cooking. Extra help when cooking
The AssistedCooking function gives you intuitive access to a range of dishes where the oven adjusts automatically. Or the time and temperature can be fully controlled by you.



Get connected. And change the way you cook
Connectivity lets you control your oven from anywhere with our app. Get tips and improve cooking techniques with app-controlled functions at your fingertips.



Cooked Evenly everywhere
The clever Hot Air convection system ensures hot air ciculates evenly throughout the oven cavity, for a cooking process that is faster, and more energy efficient.

- Connectivity: Control your oven via your smartphone or tablet.
- Electronic touch controls.
- Cooling fan
- Microwave function
- Fan controlled defrosting: Great for delicate items like cream cakes, by using room-temperature air to defrost food in half the time.
- LED digital display
- Isofront® plus triple glazed doors with a heat reflective coating.
- Retractable controls
- Child lock: Oven controls can be locked to prevent misuse, providing safety and peace of mind.
- Turbo grilling
- Inverter microwave technology cooks food evenly, preventing hot spots by spreading heat consistently.

AEG

6000 CombiQuick Microwave and Built-in Oven

GK6NK40FB

Product Specification

Main Colour	Black
Built-in Dimensions (mm) (HxWxD)	450x560x550
Functions (Main Oven)	Bottom heat (menu), Conventional cooking + microwave (menu), Conventional/Traditional cooking, Defrost, Frozen food (menu), Grill (menu), Grill + microwave (menu), Microwave, Pizza setting, Reheating, True fan cooking, True fan cooking + Microwave, Turbo grilling, Turbo grilling + Microwave
Connectivity	Yes
Total Electricity Loading (W)	3000
Steam Category	No
Timer Type	Electronic display with clock, minute minder, cooking duration and delay start.
Main Oven - Internal Capacity (L)	44
Cleaning	Clean enamel
Dimensions (mm) (HxWxD)	455x595x567
Oven control type	Pop in / Pop out flat with spin metal caps
Max Power Grill - Top Oven (W)	1900
Max power oven, W	3000
Temperature Range	30°C - 230°C

Interior Light	1, Top halogen
Lamp power (W)	25
Oven Energy Source	Electrical
Product Type	Built-in Electric Oven
Gross Weight (Kg)	35
Net Weight (Kg)	33.3
Main Oven - Trays Included	1 Dripping pan grey enamel, 1 Trivet chromed
Main Oven - Shelves Included	1 Wire shelf chromed
Main Oven - Shelf Support	Side grids Easy entry
Cord Length (m)	1.5
Plug or Hardwired	Hardwired connection only
Included Fittings	Wood screws
Cavity Coating	Grey Enamel
N° of cavities	1
PNC	944 005 397
Bar Code	7333394145051
Voltage (V)	220-240
Required Fuse (A)	16

PSGBOV230DE00001

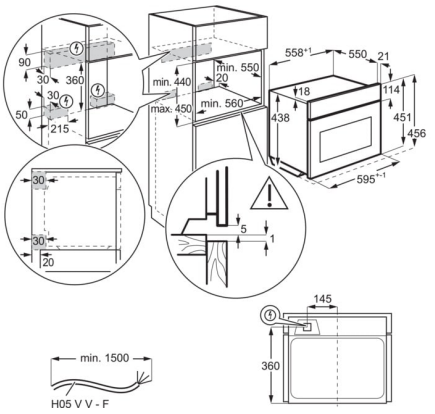

PSGBOV230DE00002

