HP DesignJet T2600 MFP Printer Series User Guide

SUMMARY

How to use your product

About this edition

© Copyright 2019 – 2026 HP Development Company, L.P.

Edition 5 - June 2026

Legal notices

The information contained herein is subject to change without notice.

The only warranties for HP products and services are set forth in the express warranty statements accompanying such products and services. Nothing herein should be construed as constituting an additional warranty. HP shall not be liable for technical or editorial errors or omissions contained herein.

IPv6-ready

Trademarks

Adobe®, Acrobat®, Adobe Photoshop®, and Adobe® PostScript® 3™ are trademarks of Adobe Systems Incorporated.

ENERGY STAR and the ENERGY STAR mark are registered U.S. trademarks.

Microsoft® and Windows® are U.S. registered trademarks of Microsoft Corporation.

PANTONE® is Pantone, Inc.'s check-standard trademark for color.

Apple and AirPrint are trademarks of Apple Inc., registered in the U.S. and other countries.

Use of the Works with Apple badge means that an accessory has been designed to work specifically with the technology identified in the badge and has been certified by the developer to meet Apple performance standards.

Table of contents

1 Introduction 1

Welcome to your printer 1

Printer models 2

Safety precautions 3

Main components 7

Turn the printer on and off 8

Front panel 10

HP Utility 13

HP Print Preview 13

Embedded Web Server 14

Demo prints 14

Configure your printer 16

Mobile printing 33

Accessibility 35

Other sources of information 35

2 Paper handling 36

General advice 36

Load a roll onto the spindle 37

Load a roll into the printer 39

Unload a roll 43

Load a single sheet 44

The stacker 46

The basket 49

View information about the paper 49

Paper presets 50

Printing paper info 51

Move the paper 51

Maintain paper 51

Change the drying time 52
Turn the automatic cutter on and off 52
Clean cut 52
3 Working with two rolls. 54
Advantages of a multiroll printer 54
How the printer allocates jobs to paper rolls 54
4 Networking 56
Introduction 56
Control network protocols 57
Front-panel menu items 57
Link configuration methods 60
Troubleshooting 62
Wi-Fi accessory 66
5 Printing 72
Introduction 72
Print from a USB flash drive 73
Print from the network folder 74
Print from My Home Folder 75
Print from a computer using a printer driver 76
Advanced print settings 77
6 Mobile printing 88
Introduction 88
Print from Android 88
Print from Chrome OS 89
Print, scan, and share from the HP Smart App 90
Print by email (HP ePrint) 90
Mobile specifications 91
7 Job queue management 92
Job queue in the front panel 93
Print job queue in the Embedded Web Server or HP DesignJet Utility 99
Scan queue in the Embedded Web Server or HP DesignJet Utility 102
8 Scanning and copying 103
Quicksets 104
Scanning 104
Scanning to AI Vectorize 110
Copying 113

Scanner preferences 118
Scanner troubleshooting 120
Scanner diagnostic plot 131
9 Color management 133
Introduction 133
How colors are represented 133
A summary of the color management process 133
Color calibration 134
Color management from printer drivers 136
Color management from the front panel 138
10 Practical printing examples 140
Print a draft for revision with the correct scale 141
Print a PDF multipage job from Adobe Acrobat Reader or Adobe Acrobat Pro 142
Print a document with the correct colors 144
Print a project 149
Print a presentation 152
Print and scale from Microsoft Office 155
11 Retrieving printer usage information 158
Get printer accounting information 158
Check usage statistics 159
Check usage statistics for a job 161
Check cost assignment 162
12 Handling ink cartridges and printhead 164
About the ink cartridges 164
Check the ink cartridges status 165
Remove an ink cartridge 165
Insert an ink cartridge 167
About the printhead 169
Check the printhead status 169
Remove the printhead 169
Insert the printhead 174
Storage of anonymous usage information 176
Safe mode 177
13 Printer maintenance 178
Check printer status 178
Clean the exterior of the printer 178

Maintain the ink cartridges 178
Move or store the printer 179
Update the firmware 180
Update the software 181
Printer maintenance kits 181
Secure File Erase 181
Disk Wipe 182

14 Scanner maintenance 183

Clean the scanner's glass plate 183
Calibrate the scanner 186

15 Supplies and accessories 188

How to order supplies and accessories 189
Introduction to the accessories 194

16 Troubleshooting paper issues 195

Paper cannot be loaded successfully 196
Paper type is not in the driver 198
Printer printed on the wrong paper type 199
Automatic cut not available 199
On hold for paper 200
The paper has jammed in the print platen 201
The paper has jammed in the stacker 206
The printer reports unexpectedly that the stacker is full 206
A strip stays on the output tray and generates jams 206
Printer displays out of paper when paper is available 206
Prints do not fall neatly into the basket 207
Sheet stays in the printer when the print has been completed 207
Paper is cut when the print has been completed 207
Cutter does not cut well 207
Roll is loose on the spindle 207
Recalibrate the paper advance 208

17 Troubleshooting print-quality issues 210

General advice 210
Horizontal lines across the image (banding) 210
Whole image is blurry or grainy 211
Paper is not flat 212
Print is scuffed or scratched 212
Ink marks on the paper 214

Black horizontal lines on yellow background 214
Black ink comes off when you touch the print 215
Edges of objects are stepped or not sharp 215
Edges of objects are darker than expected 215
Horizontal lines at the end of a cut sheet print 215
Vertical lines of different colors 216
White spots on the print 216
Colors are inaccurate 216
Colors are fading 217
Image is incomplete (clipped at the bottom) 217
Image is clipped 218
Some objects are missing from the printed image 218
Lines are too thick, too thin or missing 219
Lines appear stepped or jagged 219
Lines print double or in the wrong colors 220
Lines are discontinuous 221
Lines are blurred 221
Line lengths are inaccurate 222
Image Diagnostics Print 223
If you still have a problem 225

18 Troubleshooting ink cartridge and printhead issues 226

Cannot insert an ink cartridge 226
Ink cartridge status messages 226
Cannot insert the printhead 227
The front-panel display recommends reseating or replacing the printhead 227
Clean the printhead 227
Align the printhead 228
Printhead status messages 228

19 Troubleshooting general printer issues 229

Printer does not print 229
Front panel fails to initialize 229
Printer seems slow 230
Communication failures between computer and printer 230
Cannot access the Embedded Web Server 231
Cannot connect to the Internet 231
Web Services issues 231
Automatic file system check 231

Alerts 232

20 Front-panel error messages 233

System error log 234

21 HP Customer Care 235

Introduction 235

HP Professional Services 236

Customer Self Repair 237

Contact HP Support 238

22 Printer specifications 239

Functional specifications 239

Mobile printing specifications 240

Physical specifications 241

Memory specifications 241

Power specifications 242

Environmental specifications 242

Acoustic specifications 242

Glossary 244

Index 247

1 Introduction

The following sections provide details for this topic.

Welcome to your printer

This topic explains the concepts involved in this subject.

Your printer is a color inkjet printer designed for printing high-quality images on paper up to 914 mmlnline measure markup needed (36 in) wide. Some major features of the printer are shown below:

- Print resolution of up to 2400 × 1200 optimized dpi, from a 1200 × 1200 dpi input, using the **Best** print-quality option, the **Maximum Detail** option and photo paper.
- The printer can be controlled from its front panel or from a remote computer using the Embedded Web Server, HP DesignJet Utility, or HP Click Printing Software (see http://www.hp.com/go/designjetclick).
- Touch-sensitive front panel in color, with an intuitive graphical user interface.
- Job previews in the front panel.
- Job previews on remote computers.
- Includes Web-connected features such as automatic firmware updates, HP ePrint, and Mobile Printing.
- Driverless printing: Files in common graphical formats can be printed directly without needing a printer driver. Just insert a USB flash drive or use HP Click Printing Software.
- Paper flexibility and automatic easy load, see Paper handling on page 36, with information and presets accessible from the front panel and the HP DesignJet Utility.
- Handles cut-sheet and roll paper.
- Six-ink system.
- Accurate and consistent color reproduction with automatic color calibration.
- Economode for printing economically.
- Two rolls loaded at once (T2600MPF) provide fast and easy switching between different rolls, or long runs of unattended printing.
- High productivity features such as job previewing and nesting using HP Click Printing Software.

- Ink and paper usage information available from the Embedded Web Server, see Embedded Web Server on page 14.
- Access to the online HP Support Center (see HP Support Center on page 236).

Printer models

This guide covers the following printer models, normally referring to them by their short names for brevity.

Table 1-1 Printer models

Full name	Short name
HP DesignJet T2600 Plus Edition HP DesignJet T2600	T2600
HP DesignJet T2600 PostScript Plus Edition HP DesignJet T2600 PostScript	T2600 PS
HP DesignJet T2600dr Plus Edition HP DesignJet T2600dr	T2600dr
HP DesignJet T2600dr PostScript Plus Edition HP DesignJet T2600dr PostScript	T2600dr PS

Safety precautions

Read these safety precautions before using your printer. Also read your local Environmental, Health, and Safety regulations.

This equipment is not suitable for use in locations where children are likely to be present.

For any maintenance or part replacement, follow the instructions provided in HP documentation to minimize safety risks and to avoid damaging the printer.

General safety guidelines

There are no operator-serviceable parts inside the printer except those covered by HP's Customer Self Repair program.

See http://www.hp.com/go/selfrepair. Refer servicing of other parts to qualified service personnel.

Turn off the printer and call your service representative in any of the following cases:

- The power cord or plug is damaged.
- The printer has been damaged by an impact.
- There is any mechanical or enclosure damage.
- Liquid has entered the printer.
- There is smoke or an unusual smell coming from the printer.
- The printer has been dropped.
- The printer is not operating normally.

Turn off the printer in either of the following cases:

- During a thunderstorm.
- During a power failure.

Take special care with zones marked with warning labels.

Ventilation measures for your location, whether office, copy room, or printer room, should meet local environmental health and safety (EHS) guidelines and regulations.

Electrical shock hazard

This topic explains the concepts involved in this subject.

⚠ **WARNING!** The internal circuits of the built-in power supplies and power inlet operate at hazardous voltages capable of causing death or serious personal injury.

Unplug the printer's power cord before servicing the printer.

The printer requires a building installation circuit breaker, which must meet the requirements of the printer and should be in accordance with the Electrical Code requirements of the local jurisdiction of the country in which the equipment is installed.

To avoid the risk of electric shock:

- The printer should be connected to earthed mains outlets only.
- Avoid overloading the printer's electrical outlet with multiple devices.
- Do not remove or open any closed system covers or plugs.
- Do not insert objects through slots in the printer.
- Take care not to trip over the cables when walking behind the printer.
- Insert the power cord securely and completely into the wall socket and printer inlet.
- Never handle the power cord with wet hands.

Fire hazard

This topic explains the concepts involved in this subject.

To avoid the risk of fire, take the following precautions:

- The customer is responsible for meeting the printer's requirements and the Electrical Code requirements according to the local jurisdiction of the country where the printer is installed. Use the power supply voltage specified on the nameplate.
- Use only the power cord supplied by HP with the printer. Do not use a damaged power cord. Do not use the power cord with other products.
- Do not insert objects through slots in the printer.
- Take care not to spill liquid on the printer. After cleaning, make sure all components are dry before using the printer again.
- Do not use aerosol products that contain flammable gases inside or around the printer. Do not operate the printer in an explosive atmosphere.
- Do not block or cover the openings of the printer.

Mechanical hazard

This topic explains the concepts involved in this subject.

The printer has moving parts that could cause injury. To avoid personal injury, take the following precautions when working close to the printer.

- Keep your clothing and all parts of your body away from moving parts.
- Avoid wearing necklaces, bracelets, and other hanging objects.
- If your hair is long, try to secure it so that it will not fall into the printer.
- Take care that sleeves or gloves do not get caught in moving parts.
- Do not operate the printer with covers bypassed.
- If you need to replace the cutter assembly, take care not to cut yourself on the sharp cutting edge.
- Internal fan blades are hazardous moving parts. Disconnect the printer before servicing.

- Never insert your hands into the printer while it is printing, due to the moving parts inside.

Heavy paper hazard

This topic explains the concepts involved in this subject.

Special care must be taken to avoid personal injury when handling heavy papers.

- Handling heavy paper rolls may require more than one person. Care must be taken to avoid back strain and/or injury.
- When handling heavy paper rolls, wear personal protective equipment, including boots and gloves.
- Follow your local Environmental Health and Safety regulations for handling heavy paper rolls.

Ink handling

HP recommends that you wear gloves when handling ink supplies.

Warnings and cautions

The following symbols are used in this manual to ensure the proper use of the printer and to prevent the printer from being damaged. Follow the instructions marked with these symbols.

⚠ **WARNING!** Failure to follow the guidelines marked with this symbol could result in serious personal injury or death.

⚠ **CAUTION:** Failure to follow the guidelines marked with this symbol could result in minor personal injury or damage to the printer.

Warning labels

This topic provides a full set of reference information for this subject.

Table 1-2 Warning labels

Label	Explanation
	Electric shock hazard. Power Supply inside that operates at hazardous voltages. Disconnect all power sources before servicing. Before starting, read and follow the operating and safety instructions.
	Moving part. Keep your fingers and hands away from the moving paper system.
	Moving parts. Rotating roll bar. Keep hands out.

Table 1-2 Warning labels (continued)

Label	Explanation
	Do not lift. Your fingers or hand may be trapped or crushed.

NOTE: The final label position and its size on the printer may vary slightly, but labels should always be visible and close to the potential risk area.

Main components

The following front and rear views of the printer illustrate the main components.

Front view

The following steps provide the complete procedure for this topic.

NOTE: This illustration shows the T2600dr.

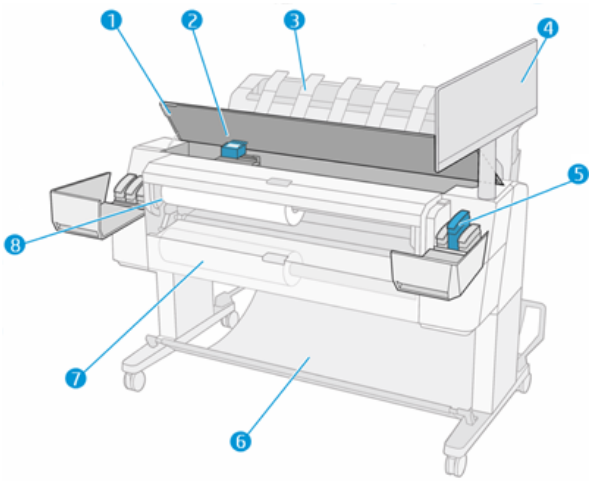

1. Scanner
2. Printhead
3. Stacker
4. Front panel
5. Ink cartridge slot
6. Basket
7. lower roll cover (T2600dr only)
8. Upper roll cover

Rear view

The following steps provide the complete procedure for this topic.

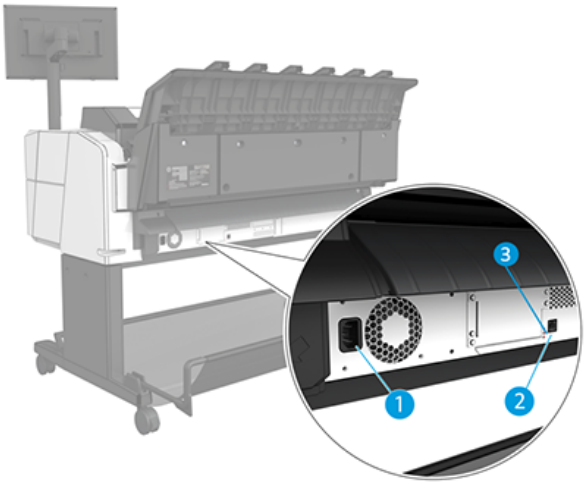

1. Power socket
2. Gigabit Ethernet port, to connect to a network
3. Diagnostic LEDs (to be used by service engineers)

The Hi-Speed USB host port is on the other side of the printer, beside the front panel.

Turn the printer on and off

This topic provides a full set of reference information for this subject.

TIP: The printer can be left powered on almost without wasting energy. Leaving it on improves response time and overall system reliability. When the printer has not been used for a certain period of time (the default time is determined by Energy Star), it saves power by going into sleep mode. However, any interaction with the printer's front-panel display, or sending a new job to print, returns it to active mode, and it can resume printing immediately. To change the sleep mode time, see Change system options on page 12.

NOTE: In sleep mode, the printer performs maintenance service to the printheads from time to time. This avoids long preparation times after long idle periods. Therefore, it is strongly recommended to leave the printer powered on or in sleep mode to avoid wasting ink and time.

If you want to turn the printer on or off or reset the printer, the normal and recommended method is to use the power key beside the front panel.

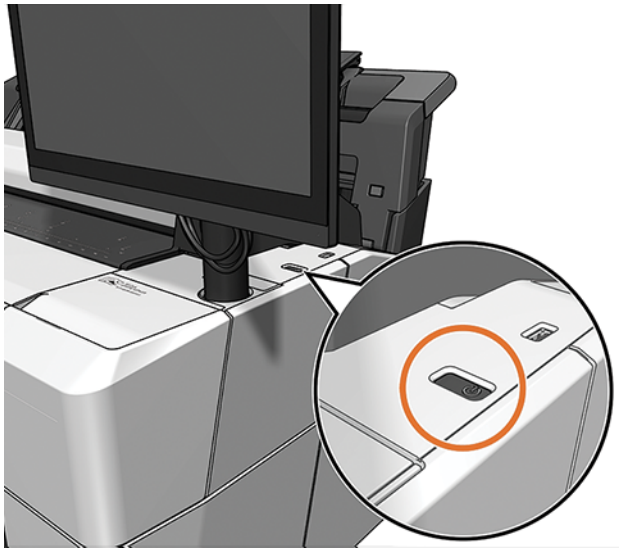

However, if you plan to store the printer for a long period or the power key does not seem to work, you are recommended to unplug the power cord at the rear.

To turn it back on, plug in the power cord.

When the printer is powered back on, it takes about three minutes to initialize and check and prepare the printheads. Preparing the printheads takes about 75 seconds. However, if the printer has been off for six weeks or more, preparing the printheads could take up to 45 minutes.

Front panel

The front panel is a touch-sensitive screen with a graphical user interface, located on the front right of the printer.

It gives you complete control of your printer: from the front panel, you can view information about the printer, change printer settings, monitor printer status, and perform tasks such as supplies replacement and calibrations. The front panel displays alerts (warning and error messages) when necessary.

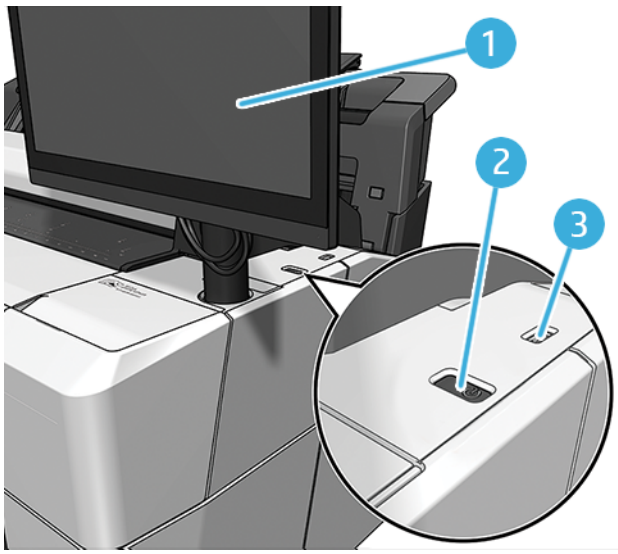

It includes the following components:

1. The front panel itself: a 15.6 inch, full-color, touch-sensitive screen with a graphical user interface.
2. The power key, with which you can turn the printer on or off, or wake up from sleep mode.
3. A Hi-Speed USB host port, intended for connecting a USB flash drive, which can provide files to be printed. When a USB flash drive is inserted, a USB icon is displayed on the front panel's all-apps page.

The front panel has a large central area to display dynamic information and icons.

Home pages

There are three top-level pages that you can move between by sliding your finger across the screen:

- The main screen provides direct access to the main printer functions.

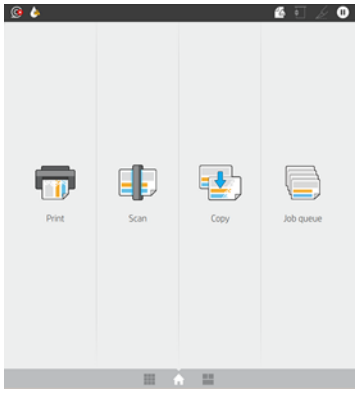

- The all-apps page displays a list of all apps available in your printer, and the status of each of them.

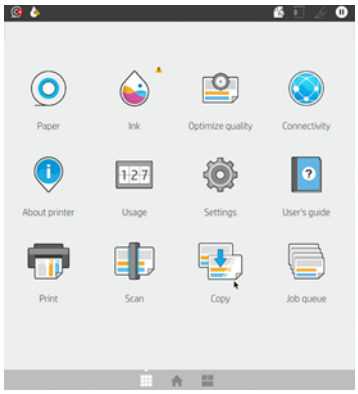

- If you swipe left to the widget page, you can see at a glance the status of ink, paper supplies and job queue.

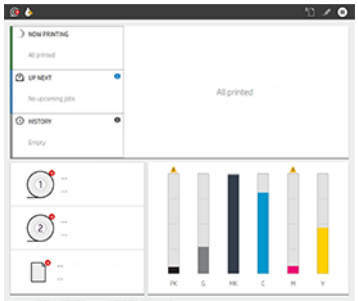

- At the top of the all-apps page there is a dashboard that displays alerts related to the main functions of the printer. Swipe down the dashboard to access the **Status Center**.

Dim mode

After some time with no activity (5 minutes by default), the printer goes to dim mode, which reduces the brightness of the front panel by 25%. Any activity, such as the use of the front panel or the arrival of a print job, ends dim mode and restores normal brightness. After some time in dim mode (15 minutes by default), the printer changes to sleep mode. The time periods can be changed from the front panel.

Sleep mode

Sleep mode puts the printer into a reduced power state after a period of inactivity, turning off some elements to save energy. Printer features can be enabled from this mode, and the printer maintains network connectivity, waking up only as necessary.

The printer can be woken from sleep mode any of the following ways:

- By pressing the power button
- By opening a cover
- By sending a print job

The printer wakes up in several seconds, more quickly than if it is completely turned off. While in sleep mode, the power button blinks.

To change the time that elapses before sleep mode, see Change system options on page 12.

Printer Monitoring (with the Print Spooler) and Remote Printer Management with the HP Utility and Web JetAdmin continue to be available during sleep mode. Some remote management tasks offer the option of remotely waking up the printer if needed to perform the task.

Change the language of the front-panel display

If you can understand the current front-panel display language, tap ⚙, then **System** > **Language**.

The language selection menu should now appear on the front-panel display. Tap your preferred language.

The available languages are English, Portuguese, Spanish, Catalan, French, Dutch, Italian, German, Polish, Russian, Simplified Chinese, Traditional Chinese, Korean, and Japanese.

Change system options

This topic explains the concepts involved in this subject.

You can change various printer system options from the front panel. Tap ⚙, then **System**.

- **Language**.
- **Display brightness** to change the brightness of the front-panel display.
- **Date and time options** to view or set the printer's date and time.
- **Unit selection** to change the units of measurement in the front-panel display. Select **English** or **Metric**. By default, units are set to **Metric**.
- **Speaker volume** to change the volume of the printer's loudspeaker. Select **Off**, **Low**, or **High**.
- **Power options** > **Printer sleep** to change the length of time the printer waits before going into sleep mode (see Sleep mode on page 12). You can set the time from 5 to 60 minutes. The default time is <15 minutes (total time including 5 minutes in dim mode).
- **Power options** > **Auto-off due to inactivity** to turn off the printer automatically after 120 minutes of inactivity.

- **Restore factory settings** to restore the printer settings to their original values as set in the factory. This option restores all of the printer settings except the administrator password and the paper presets.
- **Firmware update** to configure the automatic firmware update.

HP Utility

The HP Utility is a Windows only tool that enables you to manage your printer from a computer with a TCP/IP connection.

You can install the HP Utility from http://www.hp.com/go/DesignJetT2600/drivers.

How to launch the HP Utility

- Start the HP DesignJet Utility from the icon on your taskbar or from the Start menu > **HP** > **HP DesignJet Utility**. This launches the HP DesignJet Utility, showing the printers installed on your computer. When you open the HP DesignJet Utility for the first time, it may offer you an automatic update with enhanced functionality that we recommend you to accept.

  When you select your printer in the left pane, everything that appears in the right pane is specific to that printer.

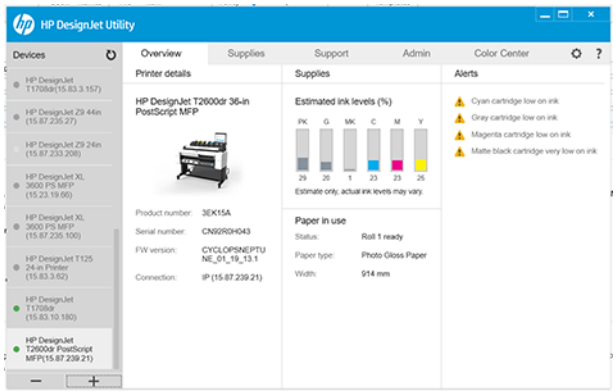

HP Print Preview

The HP Print Preview application enables you to see a basic preliminary preview of how your job will be printed.

This application is available only under Windows. You can install the HP Print Preview by downloading the integrated installer from http://www.hp.com/go/DesignJetT2600/drivers.

If you use a V4 PDF driver, you can change the rotation, scaling, color mode and the paper source settings in the application before you print.

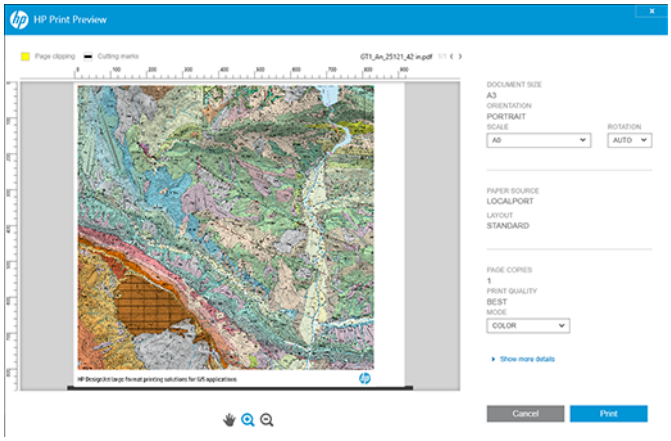

Embedded Web Server

The Embedded Web Server window displays a menu used to access all the supported functionality.

The following browsers are known to be compatible with the Embedded Web Server:

- Microsoft Internet Explorer 11 and later for Windows 7 and later
- Apple Safari 8 and later for OS X 10.10 and later
- Mozilla Firefox (latest version)
- Google Chrome (latest version)

To use the Embedded Web Server on any computer, open your Web browser and enter the printer's IP address in the browser's address bar. You can find your printer's IP address in the printer's front panel: tap and then **Network**. See Configure your printer on page 16.

NOTE: Your browser may display a security warning when you enter the IP address. If you have entered the correct address, it is safe to ignore the warning and continue to access the Embedded Web Server.

It supports the following languages: English, Portuguese, Spanish, Catalan, French, Dutch, Italian, German, Polish, Russian, Simplified Chinese, Traditional Chinese, Korean, and Japanese. It uses the language that you specified in your Web browser options. If you specify a language that it cannot support, it is displayed in the language selected in the printer, or else in English.

To change the language, change your Web browser's language setting. To complete the change, close and reopen your Web browser.

Demo prints

The demo prints give various kinds of information about your printer. They can be requested from the front panel.

Before requesting a demo print, check that the printer and the paper are ready for printing.

- The loaded paper should be at least A3 landscape—419 mm (16.53 in) wide—otherwise the print may be clipped.

- The front panel should be displaying the **Ready** message.

To print a demo print, tap ⚙, then scroll down and tap **Internal prints**, then **Demo prints**, and select a print. The following prints are available:

- Cad Color
- GIS
- Render
- Architectural Presentation Panel

Configure your printer

The following sections provide details for this topic.

Connect the printer to your network

The printer is able to configure itself automatically for most networks, in a similar way to any computer in the same network. The first time you connect it to a network, this process may take a few minutes.

Once the printer has a working network configuration, you can check its network address from the front panel: tap .

TIP: Consider making a note of the printer's IP address, because you may need it during the setup process of connecting your Windows or Mac OS computer clients.

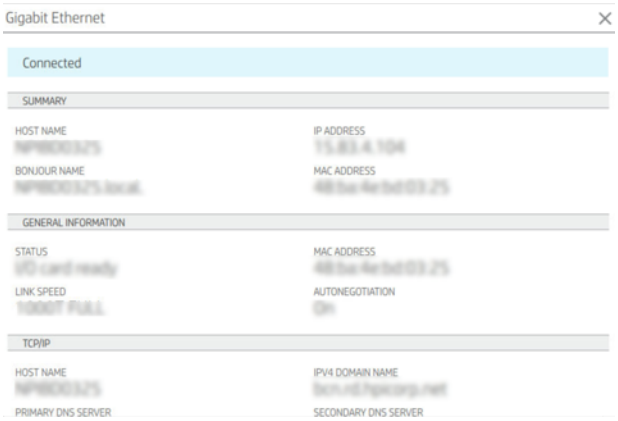

Modify network configuration

To modify the current network configuration, go to the front panel.

Tap , then , then **Network** > **Gigabit Ethernet**. From here it is possible, though not normally necessary, to change the settings manually; this can also be done remotely using the Embedded Web Server.

For full details of the available connectivity settings, see Networking on page 56.

If you accidentally misconfigure the printer's network settings, you can restore the network settings to their factory values from the front panel: tap , then , then **Restore factory settings**. Then you must restart the printer. This automatically provides a working network configuration for most networks. The printer's other settings remain unchanged.

Install your printer under Windows

The following steps provide the complete procedure for this topic.

The following instructions apply if you intend to print from software applications using a printer driver. See Printing on page 72 for alternative ways of printing.

Before you begin, check your equipment:

- The printer should be set up and on.
- The Ethernet switch or router should be on and functioning correctly.
- The printer and the computer should be connected to the network (see Connect the printer to your network on page 16).

Now you can proceed to install the printer software and connect to your printer.

1. Make a note of the printer's host name and IP address from the front panel (see Connect the printer to your network on page 16).
2. Install the printer software from http://www.hp.com/go/DesignJetT2600/drivers, following the software installation instructions. By default, the following driver is installed:
   - Non-PostScript printers: The raster driver
   - PostScript printers, with Windows 7 or Windows Server 2008R2: The PostScript driver
   - PostScript printers, with Windows 8, Windows Server 2012, or later: The PDF driver
3. Once downloaded, open it, and follow on-screen steps.

If your computer fails to find any printers on the network, the **Printer Not Found** window is displayed, which helps you to try to find your printer. If you have a firewall in operation; you may have to disable it temporarily in order to find the printer. You also have the options of searching for the printer by its hostname, IP address or MAC address.

Uninstall the printer software under Windows

Use the Control Panel to uninstall the software, in the same way as you can uninstall any other software.

Install Airprint on Mac OS X

The following steps provide the complete procedure for this topic.

Before you begin, check your equipment:

- The printer should be set up and on.
- The Ethernet switch or router should be on and functioning correctly.
- The printer and the computer should be connected to the network (see Connect the printer to your network on page 16).

Now you can proceed to install the printer software and connect to your printer.

1. Go to the front panel and select **Network** > **Connectivity** > **Bonjour Name** to localize your printer's bonjour name.

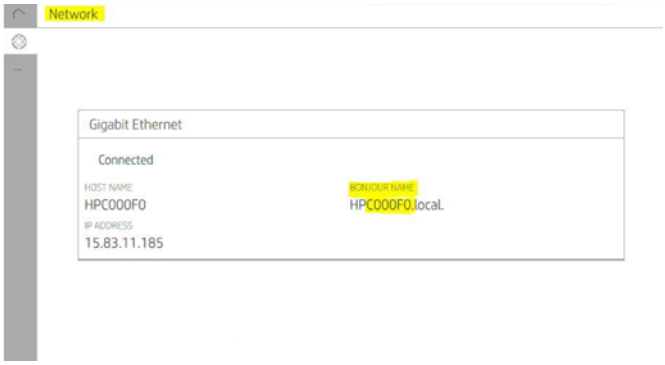

2. Check your Mac and printer are both connected to the same network, then go to **System Preferences** > **Printers and Scanners**, and then tap + to add a new printer.

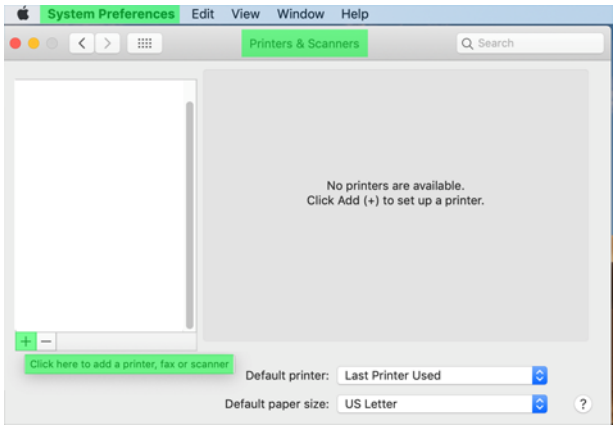

3. Tap and add the bonjour name (C000F0) into the search box (alternatively the icon can be selected and the IP address inserted).

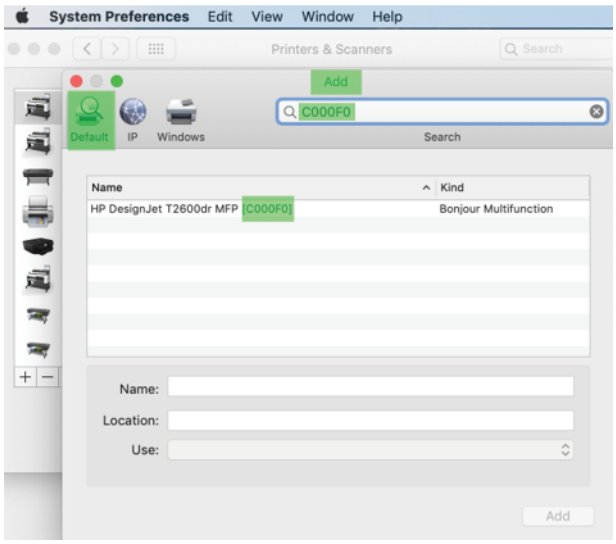

4. Your printer will appear under **Name**, (you can edit it if you like).

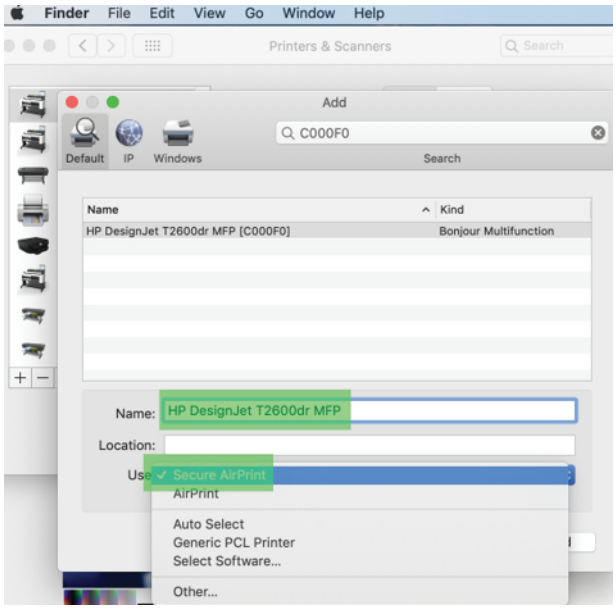

5. In the **Use** menu, select **Secure AirPrint** or **AirPrint**, and tap **Add**.

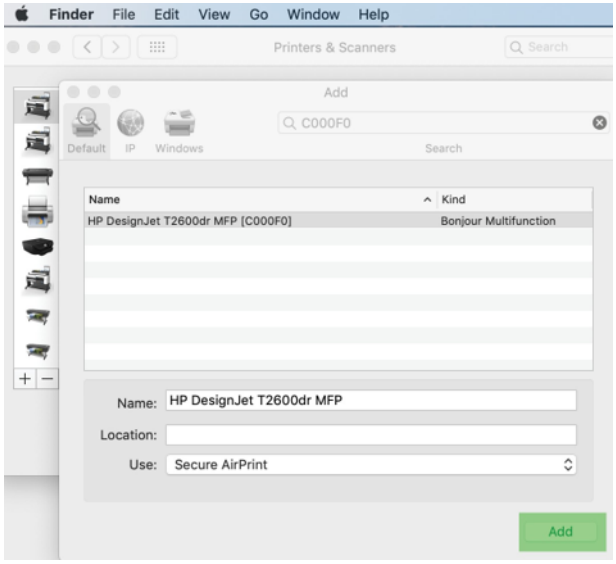

6. Your printer now appears in printers the list.

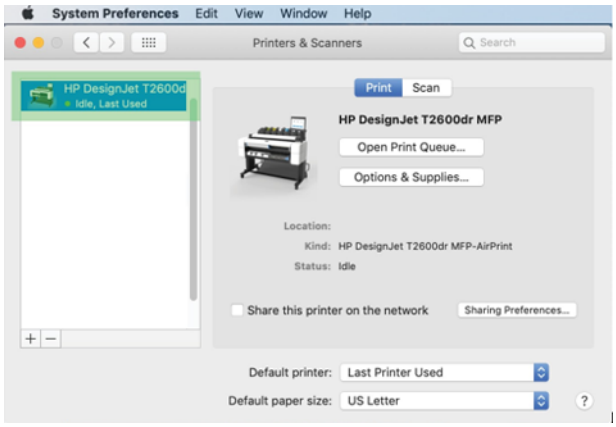

Connect a computer to the printer by network (Mac OS X)

HP Click is the recommended way to connect with your printer to a network.

See http://www.hp.com/go/clickDesignJet for installation instructions.

Set up printer services

The following sections provide details for this topic.

You can set up the following services:

- Receive automatic firmware updates
- Enable email printing
- Enable additional printer services

A network connection is required, so the printer will test its own connectivity. Remember to connect the network cable to the printer.

Each printer service can be enabled or disabled individually as explained below.

During initial printer setup, you are asked whether you want to enable these services. That decision can be changed later by tapping , then , then **Services** > **Data Collection & HP Privacy Statement**.

If you are part of the HP Partner Link Pay-per-use service, tap , then , then ···, then **Register new service** in order to register the printer service.

Verify printer connection to HP

You can check that the printer is able to connect to HP services by tapping and viewing the status there. You can see detailed information by clicking the Network or Service card.

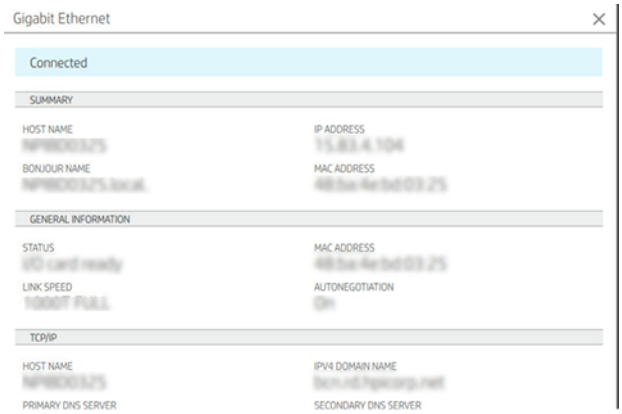

If there is any problem connecting to HP, you will be provided with a description of the problem and some possible solutions.

Enable email printing with HP ePrint

The HP Connected service makes it easy to send jobs to your printer by attaching them to an email message.

You must accept the Data Collection & HP Privacy Statement in order to use HP Connected.

To enable email printing, in the front panel, tap , then at the right top corner of the page, then **Services** > **HP Connected** > **Setup Web Services**. A printer email address and printer code are assigned to the printer.

To see your printer email address, tap , then in the right top corner of the page, then **Services** > **HP Connected** > **Printer email address**.

Alternatively, you can configure it from the Embedded Web Server. Go to the **HP Web Services** menu and click **Enable HP web Services** to register and enable HP ePrint.

If you are the printer administrator, log in at HP Connected (http://www.hpconnected.com) to customize your printer's email address or manage printer security for remote printing. To refresh the printer's email address from the front panel, tap , then in the right top corner of the page, then **Services** > **HP Connected** > **Printer email address**.

Visit http://www.hpconnected.com to register yourself and your printer (using the printer code).

HP ePrint job policies

By default, the jobs sent by email are directly printed. To change the settings, tap , then at the right top corner of the page, then **Services** > **HP Connected** > **HP ePrint jobs**.

You can select the roll to be used for HP ePrint jobs, or let the printer decide (save paper).

Configure ePrint connectivity service

You can remove the connection to HP ePrint if required for security. At the front panel, tap , then at the right top corner of the page, then **Services** > **HP Connected** > **Remove Web Services**.

To use remote printing again, you will need to set it up again from scratch.

Configure firmware updates

You can choose from the Embedded Web Server or from the front panel whether and how to download firmware updates.

NOTE: If an administrator password has been set, it will be required to change these settings.

- **In the Embedded Web Server:** Click **About printer** > **Firmware update**.
- **Using the front panel:** Tap , then **System** > **Firmware update**.

The following settings are available:

- **Check for updates automatically**: The printer will inform you when new firmware is available.
- **Download new firmware automatically**: The printer will automatically download new firmware whenever it becomes available. Deactivate this option to download new firmware manually.

  NOTE: Downloading the firmware does not mean that you have installed it in your printer. To install the new firmware, you must confirm the installation manually.

- **Firmware update history**.

LDAP Configure the email address book

The printer uses Lightweight Directory Access Protocol (LDAP), which provides access to a network address book for scan-to-email and authentication purposes.

The following instructions explain how to use LDAP to connect the printer to a network email address book, and to authenticate users of the printer using their LDAP credentials.

Email lookup

When the printer uses LDAP for scan-to-email, it searches a database of email addresses. When you enter the email address and click the **Search** button, LDAP searches a list of email addresses for matching characters. You can refine the search results by typing additional characters and performing a new search.

Printers that support LDAP also support the use of a standard outgoing email profile, so they do not require a connection to an LDAP server in order to send email.

Information needed before starting

Ensure that you have the following information before starting the configuration:

- Server address (hostname or IP).
- Server authentication requirements.
- Path to start search (BaseDN, Search Root) (for example, `o=mycompany.com`).
- Attributes for matching the name entered (such as `cn`or `samAccountName`), retrieving the email address (such as `mail`), and how the name will be displayed on the control panel (such as `displayName`).

Address book setup

The following steps provide the complete procedure for this topic.

In the Embedded Web Server, click **Settings** >**Address book**. Here you can configure the printer to obtain email addresses from an LDAP server, so that they are available when users perform a search from the **Scan to Email** screen.

1. Open the Embedded Web Server.
2. Click **Settings** >**Address book**.
3. Enable the LDAP server (mandatory to continue with the LDAP configuration).

   Network Directory Server section:

4. In the **Network Directory Server** section, enter the name of the LDAP server address (for example, `ldap.mycompany.com`) and **Port**.

   Server Authentication requirements section:

5. In the **Server authentication requirements** section you can select the appropriate authentication type in the server (Windows credentials, simple credential, use printer user's credentials). It is mandatory to fill the Domain name, Username, and password.

   LDAP Database search settings section:

6. Fill in these fields:
   - In the path to start a search (BaseDN, Search Root) box, enter the path to start searching the database (for example, `o=mycompany.com`).
   - In the recipients's display name box, enter the name of the attribute that contains the person's name (for example, `displayName`).
   - In the recipient's email address box, enter the name of the attribute that contains the person's email address (for example, `mail` or `rfc822Mailbox`).
   - Use the LDAP filter condition box to set up an optional filter to filter out e-mail addresses.
7. Click the **Apply** button to save the settings. Setup is complete.
8. To check that the LDAP retrieval is set up correctly, enter at least three characters of a network contact name in the **Test** box, and then click the **Test** button. If the test is successful a message is displayed.

Configure a network folder

In the printer's Embedded Web Server, click the *Settings* tab and *Network* folder.

See Embedded Web Server on page 35.

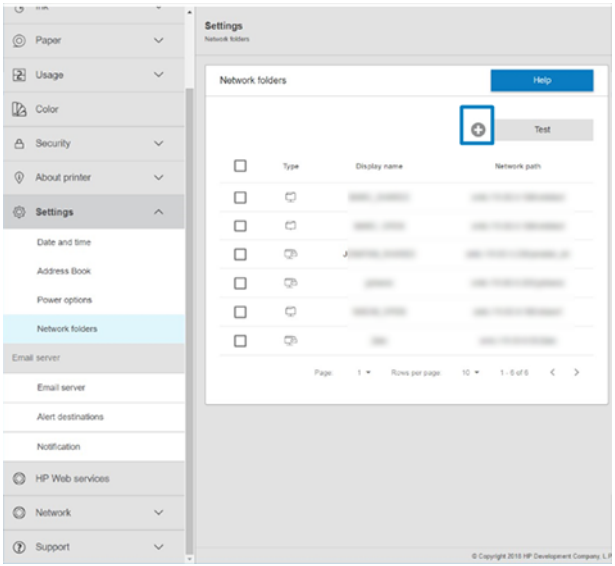

On the Network folders page, click ⊕ at the top of the page, and fill in the various fields:

- **Display name:** Name displayed in the front panel when you are choosing the file's scan destination/ printing origin (depending of the functionality use).
- **Network path:** Should contain the network name of the remote computer and must start with // followed by the path.
- **Protocol:** SMB
- **Functionality Use:** Choose between **Print only**, **Scan only**, **Print and Scan** or **None**.
- **Default Network destination:** Enable this option to configure this folder as the default destination for files.
- **Browse Network folder Structure:** Enable to browse through the structure of folders.
- **Authentication requirements:** Enter the login username and password for the printer to access documents and images in the network folder. The username and password are stored and encrypted in the printer's memory. There are 3 options:
  - **None:** Use this setting for an unprotected folder on the network (no credentials required).
  - **Automatic login using following credentials:** Enter username and password only once during configuration and later use the folder in the front panel without entering credentials.
  - **Prompt for credentials when needed:** Enter username and password in the front panel every time you use it.

NOTE: User password should contain the password of the **user**. Domain should contain the name of the domain in which the user name exists. If the **user** does not belong to any domain, leave this field empty.

- **Security Pin Option:** Create a 4-digit security PIN to prevent unauthorized people from accessing documents and images in this network folder.

For a network folder, enter the remote computer's name or IP address, the shared folder's, and the username and password of the **user** already created on the remote computer. Leave the user domain field empty unless the user is a member of a Windows domain. If the user is only a local user of the remote computer, leave the field empty. You can use the name (instead of the IP address) in the server name field, only if the shared folder is on a Windows computer in the same local network.

- Click **Apply** to save the configuration.
- The printer automatically checks that it can access the network folder. If not, see Cannot access the network folder on page 130.

NOTE: If the product has already been configured for scanning to network/printing from networks and you now want to use a different shared folder, click .

You can check that the shared folder remains accessible by clicking Verify in the Embedded Web Server at any time. A correctly configured shared folder can become inaccessible if the user's password is changed, or if the shared folder is moved or deleted.

Example: Create a network folder under Windows

The following steps provide the complete procedure for this topic.

1. Create a new user account on the remote computer. You can use an existing user account for this purpose, but it is not recommended.
2. Create a new folder on the remote computer, unless you want to use an existing folder.
3. Right-click the folder and click **Properties**.
4. In the **Sharing tab**, click the **Advanced Sharing** button.

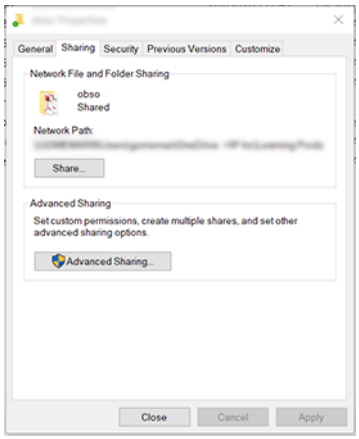

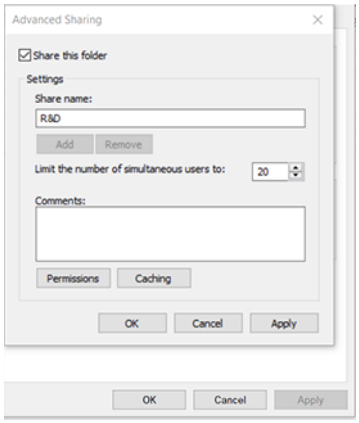

5. Ensure that the **user** has the correct permission settings depending of the functionality use of the network folder. If you configured a scan-to-folder, you need to ensure full read/write control over the shared folder so that the user(s) can add files to folder. To do this, click **Permissions** and grant **Full Control** to the user (or to any suitable group that includes that user). If the user(s) is going to use the folder to print documents, a read-only permission is enough.

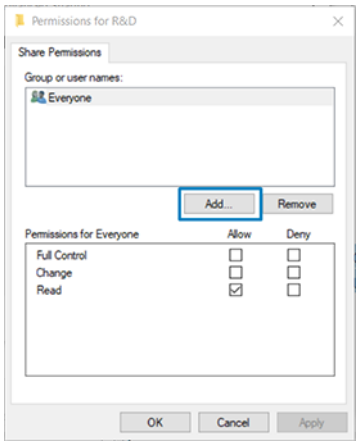

6. For **scanner users**, If there is a **Security** tab in the **Properties** window for your folder, then you must also grant the same user **Full Control** over the folder in the **Security** tab. Only some file systems such as NTFS require this.

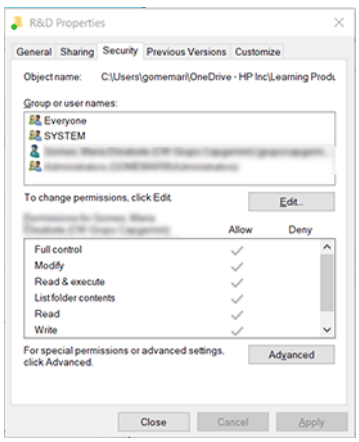

Example: Create a scan-to-network folder under Mac OS

The following steps provide the complete procedure for this topic.

1. Create a new user account for the **Scanner user** on the remote computer. You can use an existing user account for this purpose, but it is not recommended.

2. Create or choose a folder on the remote computer. By default, Mac OS users have a Public folder that can easily be used for this purpose.

3. Open the **System Preferences** application and click the **Sharing** icon.

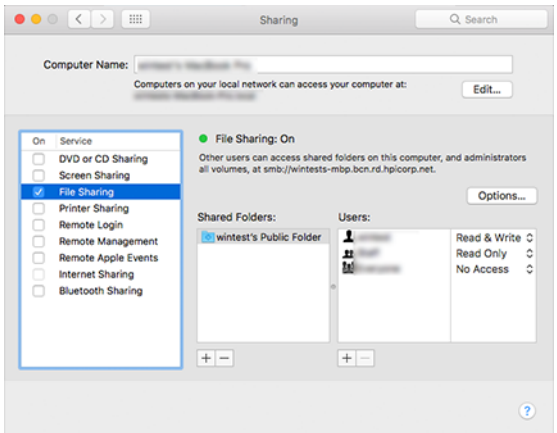

4. Depending of the functionality of the folder, make sure the user has the right permissions. For scanning purposes, **Read & Write** is needed to access the folder.

5. Click **Options**.

6. Check the **Share files and folder using the SMB** box, and make sure that the **scanner user** is checked in the **On** column.

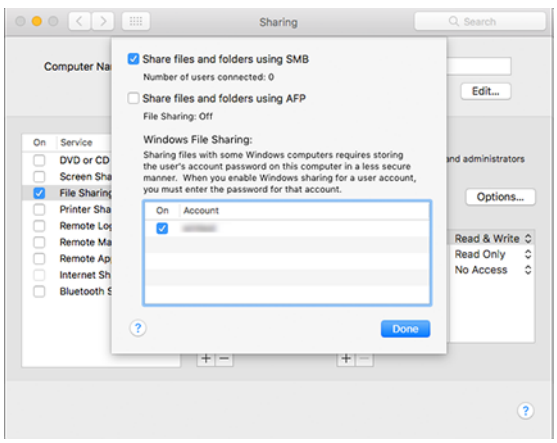

7. Click **Done**. You can now see file sharing enabled and Windows sharing on.

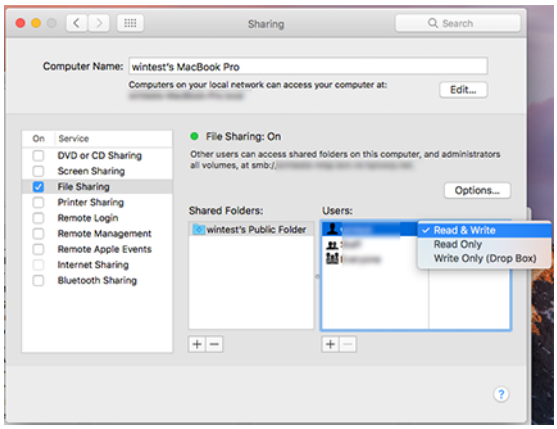

8. You must configure the printer to send scans to the folder.

Configure the email server

To configure the email server using the Embedded Web Server, click **Setup** > **E-mail server**, and fill in the following fields, which are usually supplied by the email server provider.

- **SMTP server and port number**: The IP address or fully qualified domain name of the outgoing mail server (SMTP) that will process all email messages from the printer. If the mail server requires authentication, email notifications will not work.
- **Printer e-mail address**: The email address assigned to the account that is being configured in the printer. This email address will appear in the From: field of all the email messages sent by the printer. This is not the same email address that is used by HP Connected.
- **Attachment size limit**: The maximum size of a file attached to an email message. When you scan to email from the front panel, you will be warned if an attachment is higher than this limit, but you can ignore the warning and send the message anyway.
- **Use SSL certificates**: Check this box to use SSL certificates if the server requires an encrypted connection. Click the link to configure advanced certificate settings.
- **Authentication**. If you choose authentication, you are also asked for your username and password.

Once you have configured the email server, you are strongly recommended to check the configuration.

Control access to the printer

The following sections provide details for this topic.

Manage printer security with HP Connected

When you have set up Web Services, the printer is in unlock mode. In unlock mode, anyone who knows your printer's email address can print to your printer just by sending a file to it. Although HP provides a spam filtering service, you should be careful about giving out your printer's email address, as everything sent to that address may be printed on your printer.

If you are the printer administrator, you can manage printer security or change your printer status to lock mode by visiting HP Connected at http://www.hpconnected.com. You can also customize your printer's email address and manage print jobs from there. At your first visit, you will need to create an account at HP Connected using the printer's code.

Embedded Web Server security settings

From the Embedded Web Server menu, you can click **Security** and then **Administrator password** to control access to the printer by specifying an administrator account to control access to the Embedded Web Server and the printer's front panel.

The administrator can also define other types of permissions in the control panel through the **Access control** menu option. In this section, the administrator can create new printer user accounts and assign them specific permissions depending on their role.

Other security settings are available under the **Security settings** menu option, which apply to all users.

LDAP – sign-in server

The following sections provide details for this topic.

Information needed before starting

Ensure that you have the following information before starting the configuration:

- Server address (hostname or IP).
- Server authentication requirements.
- Path to start search (BaseDN, Search Root) (for example, `o=mycompany.com`).
- Attributes for matching the name entered (such as `cn` or `samAccountName`), retrieving the email address (such as `mail`), and how the name will be displayed on the control panel (such as `displayName`).

Setup

The following steps provide the complete procedure for this topic.

In the Embedded Web Server, click **Settings** > **LDAP sign-in server**.

1. Enable the LDAP server (mandatory to continue with the LDAP configuration).

   Network Directory Server section:

2. In the **Network Directory Server** section, enter the name of the LDAP server address (for example, `ldap.mycompany.com`) and **Port**.

   - If you do not know the LDAP server, contact the server administrator.
   - If you want to enable a secure (SSL) connection, enable the toggle **Use a secure connection (SSL)**.

   Server Authentication requirements section:

3. In the **Server authentication requirements** section you can select the appropriate authentication type in the server (use printer user's credentials, use LDAP administrator's credentials). It is mandatory to fill in the domain name, username, and password.

   LDAP Database search settings section:

4. Fill in these fields:

   - In the **Bind and search root** box, enter the path to start searching the database (for example, `o=mycompany.com`).

- In the **Retrieve the printer user's name using this attribute** box, enter the name of the attribute that contains the person's name (for example, `displayName`).
- In the **Match the name entered with this attribute** box, enter the name of the attribute whose content should be matched with the username type during sign-in.
- In the **Retrieve the user's email address using this attribute** box, enter the name of the attribute that contains the person's email address (for example, `mail` or `rfc822Mailbox`).
- In the **Retrieve the printer user group using this attribute** box enter the name of the attribute that contains the groups the person belongs to.

5. Click the **Apply** button to save the settings. Setup is complete.
6. To check that the LDAP retrieval is set up correctly, enter at least three characters of a network contact name in the **Test** box, and then click the **Test** button. If the test is successful a message is displayed.

Windows sign-in configuration

The following sections provide details for this topic.

Information needed before starting

Ensure that you have the following information before starting the configuration:

- Windows domain.
- Attributes for matching the name entered (such as `cn`or `samAccountName`), retrieving the email address (such as `mail`), and how the name will be displayed on the control panel (such as `displayName`).

Setup

The following steps provide the complete procedure for this topic.

In the Embedded Web Server, click **Settings** >**Windows sign-in configuration**.

1. Enable Windows sign-in status (mandatory to continue with windows sign-in configuration).

   Windows sign-in setup section:

2. Enter the name of the **Default Windows Domain** (for example, `mycompany.com`).
   - If you do not know the Windows domain, contact the server administrator.
   - If you want to enable a secure (SSL) connection, enable the toggle **Use a secure connection (SSL)**.
3. In the **Match the name entered with this attribute** box, enter the name of the attribute; its content should be matched with the username type during sign-in.
4. In the **Retrieve the Users' Email Address using this attribute** box, enter the name of the attribute that contains the person's email address (for example, `mail` or `rfc822Mailbox`).
5. In the **Retrieve the printer User's Name using this attribute** box, enter the name of the attribute that contains the person's name (for example, `displayName`).
6. Click the **Apply** button to save the settings. Setup is complete.

7. To check that the LDAP retrieval is set up correctly, enter at least three characters of a network contact name in the **Test** box, and then click the **Test** button. If the test is successful a message is displayed.

Front-panel security settings

This topic explains the concepts involved in this subject.

From the front panel, you can tap ⚙, then **Security**, to control some of the features of the printer:

- **User sessions**: Enable or disable automatic log-out after 1, 3, or 5 minutes.
- **Embedded Web Server**: Enable or disable the Embedded Web Server.
- **Printing & management Web services**: Enable or disable Web services that are used by printing and management tools such as the HP Utility, HP Click, and SDK for RIPs.

If an administrator password has been set, it must be given in order to perform the following operations:

- Change the security settings (including the administrator password itself).
- Change the configuration of the Internet connection.
- Change the Automatic Firmware Update configuration.
- Enable or disable automatic downloading and/or installation of automatic firmware updates.
- Restore an earlier firmware version.
- Reset factory defaults.

NOTE: The administrator password can contain only characters that appear on the front panel's on-screen keyboard. If you set a new password with the Embedded Web Server, it will reject characters that do not appear in that limited character set.

Require account ID

If you want to keep records of printer usage by different users, you can set your printer to require an account ID for each job.

At the front panel, tap ⚙, then **Job management** > **Account ID required**.

If this setting is turned on, the account ID field will be mandatory and jobs with no account ID will be kept "on hold for accounting".

The account ID can be set in the printer driver when sending the job. If the job is set "on hold for accounting" by the printer, you can introduce the account ID in the driver or front panel, by going to the job queue and clicking the job that is on hold. A window with a text box is displayed and you can enter the account ID into it.

Drivers

You may wish to install one or several drivers according to your needs.

There are various different drivers for your printer; which is best for you depends on your circumstances:

- Your operating system
- The type of applications from which you print
- The number of printers you have
- The output accessories you have

You can find the latest driver software at http://www.hp.com/go/DesignJetT2600/drivers.

Specific Windows drivers

This topic explains the concepts involved in this subject.

The following driver is recommended:

- Non-PostScript printers: The raster driver
- PostScript printers, with Windows 7 or Windows Server 2008R2: The PostScript driver
- PostScript printers, with Windows 8, Windows Server 2012, or later: The PDF driver

HP Universal Print Driver configuration tool

We recommend to select the *HP DesignJet UPD PostScript Driver* if you have a PostScript Printer.

To install the HP Designjet Universal Print Driver, go to http://www.hp.com/go/DesignJetT2600/support and click **Software and drivers** > **Driver - Universal Print Driver** > **Download**.

At the end of installation, go to **Printer** > **Device Settings** > **Properties**, and confirm that **Generic** is displayed in **Current model**.

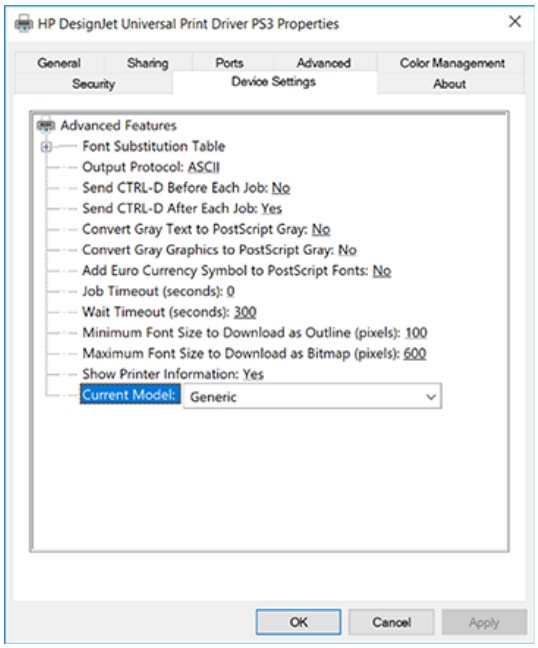

To install the tool, go to http://www.hp.com/go/DesignJetT2600/support and click **Software and drivers** > **Software – Utility** > **UPD configuration tool** > **Download**.

For information about how to install and use the tool, go to https://support.hp.com/us-en/document/c05658213.

Set Windows driver preferences

You can change some default settings in your printer driver according to your own preferences, for instance to set color or paper-saving options. To do this, click the Start or Search button on your computer's screen, then click **Devices and Settings** or **Devices and Printers**. In the next window, right-click your printer's icon, and click **Printing Preferences**. Any settings you change in the Printing Preferences window will be saved as default values for the current user.

To set the default values for all users of your system, right-click the printer's icon, click **Printer Properties**, go to the **Advanced** tab, and click **Printing Defaults**. Any settings you change in the printing defaults will be saved for all users.

Change the graphic language setting

You can change the graphic language setting from the front panel. Tap ⚙, then **Default printing configuration** > **Graphics language**.

Then select one of the following options:

- Select **Automatic** to let the printer determine which type of file it is receiving. This is the default setting; it works for most software applications. You should not normally need to change it.
- Select **PS** (PostScript) only if you are sending a file of that type directly to the printer, without going through a printer driver.
- Select **PDF** only if you are sending a file of that type directly to the printer, without going through a printer driver.
- Select **HP-GL/2** only if you are sending a file of that type directly to the printer, without going through a printer driver.
- Select **CALS/G4** only if you are sending a file of that type directly to the printer, without going through a printer driver.
- Select **TIFF** only if you are sending a file of that type directly to the printer, without going through a printer driver.
- Select **JPEG** only if you are sending a file of that type directly to the printer, without going through a printer driver.

Mobile printing

With HP Mobile Printing Solutions you can print straight from your smartphone or tablet in just a few simple steps wherever you are; using your mobile device OS or sending an email to your printer with PDF, TIFF, or JPEG attachments.

- For Android printing, install the HP Print Service App from Google Play. If you have have already installed it, check that it is up to date. You can obtain the latest version from https://play.google.com/store/apps/details?id=com.hp.android.printservice.
- You can also download the HP Smart App to enhance your printing capabilities from a smartphone or tablet.
  - Latest iOS version from https://itunes.apple.com/app/id469284907

  - Latest Android version from https://play.google.com/store/apps/details?id=com.hp.printercontrol

- To enable email printing, ensure that the service is enabled, and retrieve the printer's email address from the front panel.

For more detailed information, see http://www.hp.com/go/designjetmobility.

Accessibility

The following sections provide details for this topic.

Front panel

If required, the front-panel display brightness and the loudspeaker volume can be changed.

See Change system options on page 12.

Embedded Web Server

From the Embedded Web Server, you can see the status of the printer, and perform other actions without using the front panel.

For information about the accessibility features of the Embedded Web Server, click **Support** > **Accessibility**.

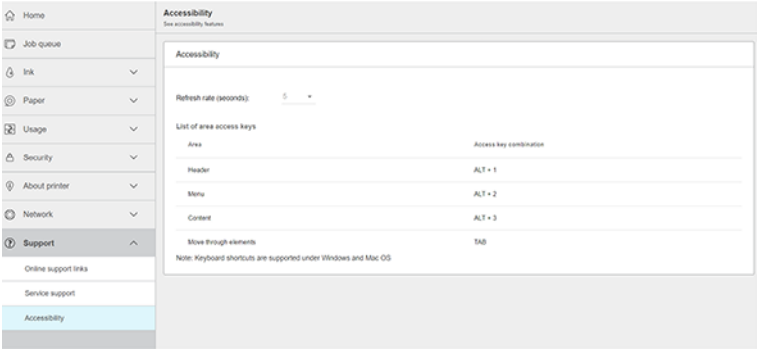

See http://www.hp.com/hpinfo/abouthp/accessibility/ for information about the HP Accessibility Program, and HP's commitment to making its products and services accessible to people with disabilities.

Other sources of information

This topic explains the concepts involved in this subject.

The following documents can be downloaded from http://www.hp.com/go/DesignJetT2600/manuals:

- Introductory information
- User guide
- Legal information
- Limited warranty

2 Paper handling

The following sections provide details for this topic.

General advice

This topic provides a full set of reference information for this subject.

⚠ **CAUTION:** Before starting a paper loading process, ensure that you have enough room around the printer, both in front and behind. You need at least enough space behind the printer to open the basket fully.

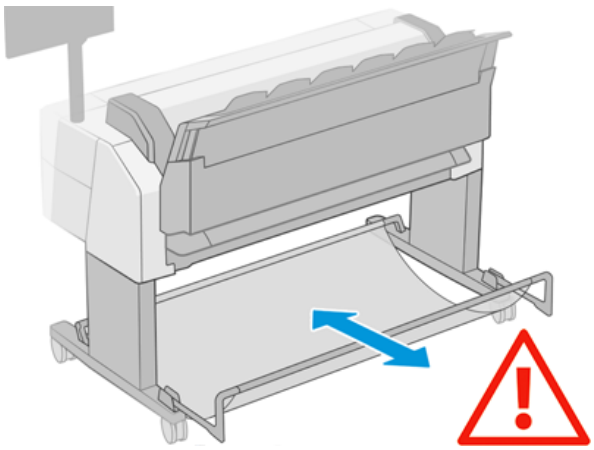

⚠ **CAUTION:** Ensure that the printer wheels are locked (the brake lever is pressed down) to prevent the printer from moving.

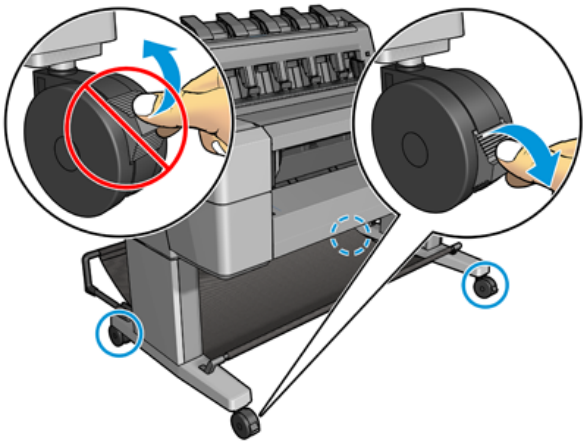

CAUTION: All paper must be 280 mm (11 in) or longer. A4 and letter paper cannot be loaded in landscape orientation.

TIP: For photo paper wear cotton gloves to avoid transferring oils onto the paper.

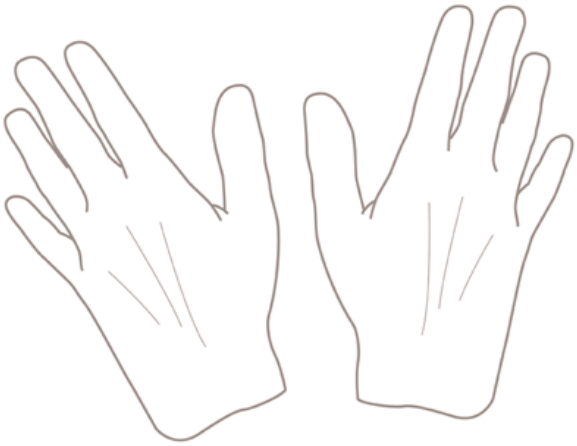

Load a roll onto the spindle

The following steps provide the complete procedure for this topic.

1. Open the roll cover.

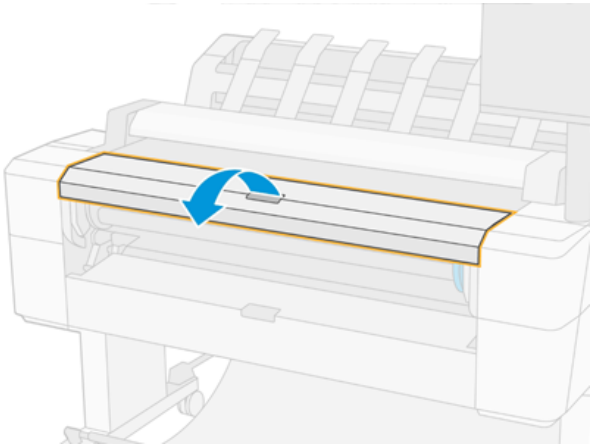

2. Remove the black end of the spindle from the printer, then the blue end.

CAUTION: Be sure to remove the black end first. Removing the blue end first could damage the black end.

WARNING! Do not insert your fingers into the spindle supports during the removal process.

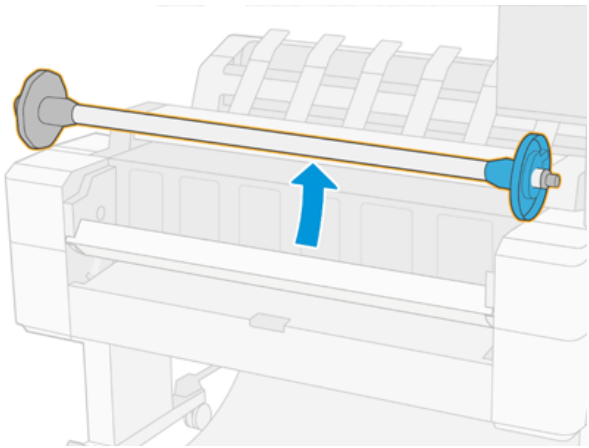

3. The spindle has a stop at each end. The blue stop can move along the spindle. remove the blue stop from the end of the spindle.

4. If there is already a roll or core on the spindle, remove it.

5. If the roll is long, rest it horizontally on a table and insert the spindle into it.

TIP: You may need two people to handle a large roll.

6. Slide the new roll onto the spindle. Make sure the paper type is oriented as shown. If it is not, remove the roll, turn it 180 degrees and slide it back on to the spindle. There are labels on the spindle showing the correct orientation.

NOTE: From the front of the printer, the blue stop should be inserted into the right-side holder.

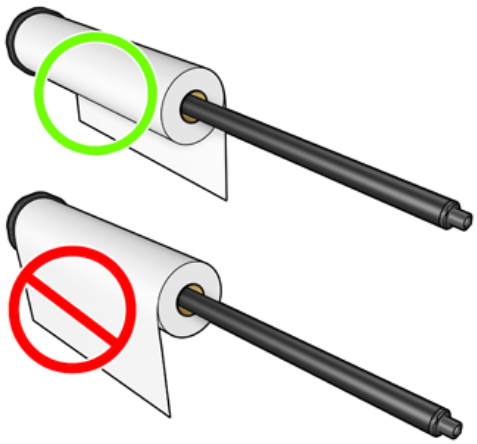

7. Put the blue stop onto the open end of the spindle, and push it towards the end of the roll.

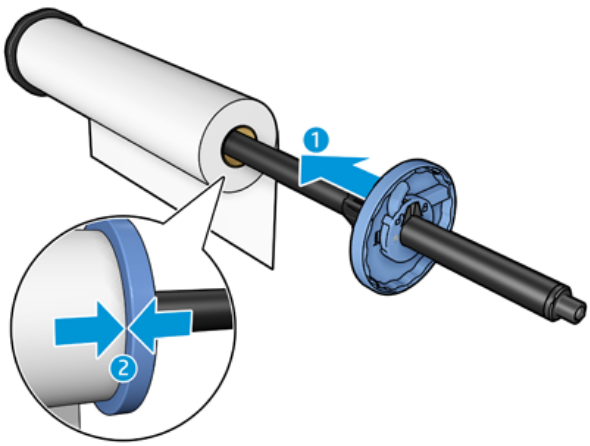

8. Ensure that the blue stop is pushed in as far as it goes, until both ends are against the stops.

If you are a regular user of different paper types, you can change rolls more quickly if you preload rolls of different paper types on different spindles. Extra spindles are available for purchase, see Supplies and accessories on page 188.

Load a roll into the printer

The following steps provide the complete procedure for this topic.

To start this procedure, you must have a roll loaded on the spindle. See Load a roll onto the spindle on page 37.

TIP: Do not try to open both roll covers at once; this may cause problems. Always close one cover before opening the other.

NOTE: The first two steps below are optional: you can start with step 3. However, in this case the printer will not keep track of the length of the roll, and will print no barcode on the roll when it is next unloaded. So you are recommended to follow all the steps, starting with step 1, unless you have turned off the **Printing paper info** option. See Printing paper info on page 51.

1. From the front panel, press , then the roll icon, then **Load**.

   If the roll you have selected is already loaded, you have to wait while it is automatically unloaded.

2. If you start to load roll 1 while roll 2 is already loaded, roll 2 is withdrawn to the standby position, so that it can be printed on again without reloading whenever required (and vice versa).

NOTE: If at any time you open a roll cover while that roll is loaded but not printing, the roll will be automatically unloaded, and you will have to reload it the next time you want to print on it.

3. Open the roll cover.

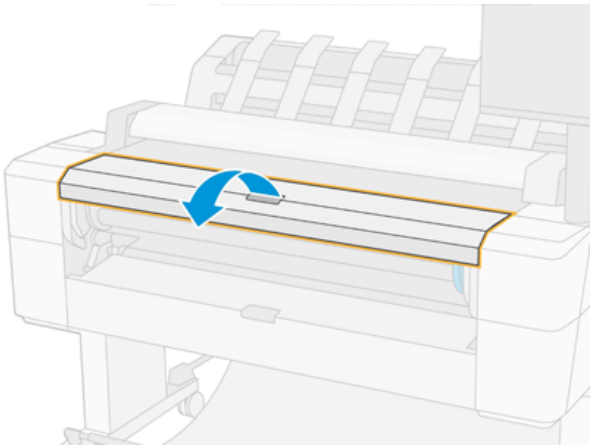

4. Load the spindle into the printer, with the blue stop on the right. Hold the spindle by its ends and not in the middle, to avoid touching the paper and perhaps leaving marks on it.

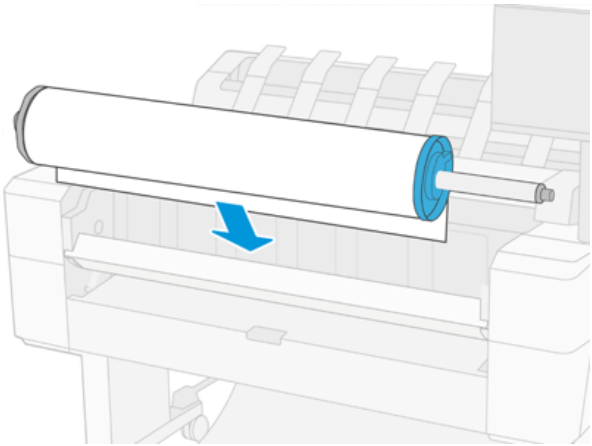

5. If the edge of the roll is not straight or torn (sometimes due to tape used to hold end of the roll), pull the paper slightly and cut a straight edge.

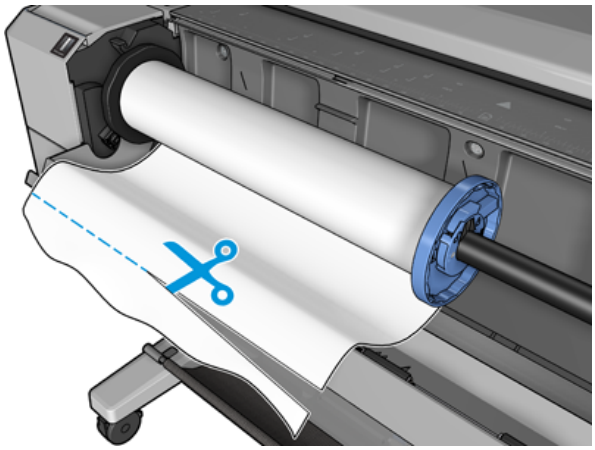

6. Insert the edge of the paper into the printer.

⚠ **WARNING!** Do not push your fingers inside the printer's paper path.

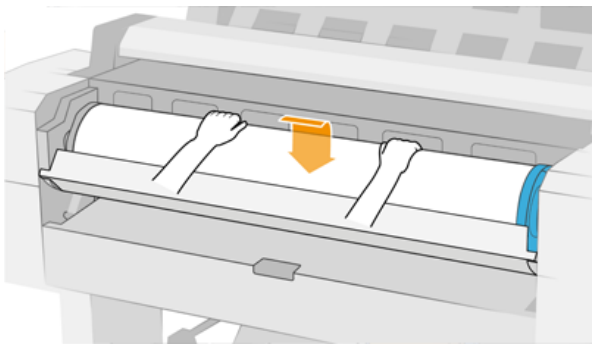

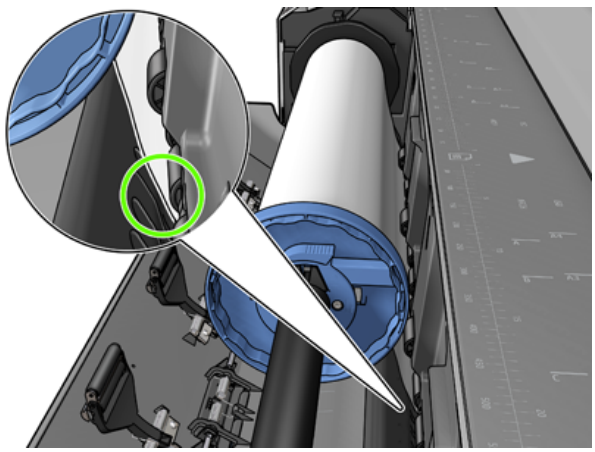

7. Roll the paper into the printer until you feel resistance and the paper flexes slightly. When the printer detects the paper, it feeds it in automatically. You will hear a beep.

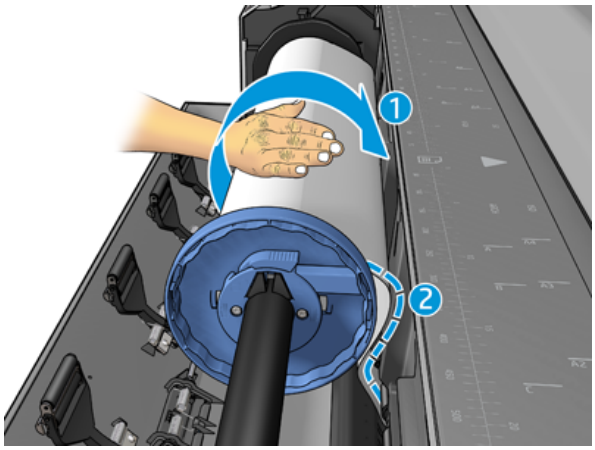

8. If the leading edge of the paper has a barcode, the printer reads and then cuts off the barcode, which falls into the basket.

9. If the leading edge of the paper has no barcode, the front panel prompts you to select the paper category and type.

TIP: If you have loaded a paper type whose name does not appear in the paper list, see Paper type is not in the driver on page 198.

10. The front panel may ask you to specify the length of the roll. See Printing paper info on page 51. Press **OK**.

11. Close the roll cover only when the front panel prompts you to do so.

NOTE: If you have an unexpected issue at any stage of the paper loading process, see Paper cannot be loaded successfully on page 196.

Unload a roll

Before unloading a roll, check whether there is paper on the roll or if the roll is out of paper, and follow the appropriate procedure as described below.

Quick procedure with paper on the roll

If there is paper on the roll, just open the roll cover, and the roll is unloaded automatically. The front panel prompts you to load a new roll or sheet.

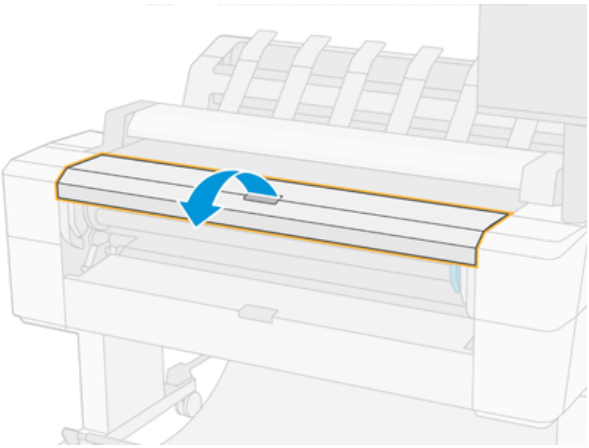

NOTE: When the roll is unloaded in this way, no barcode is printed on it, so the printer will not know the length of the roll when it is next loaded. See Printing paper info on page 51.

NOTE: If you open the a roll cover while a sheet is loaded, the sheet is also unloaded.

Front panel procedure with paper on the roll

The following steps provide the complete procedure for this topic.

If there is paper on the roll, you can unload it from the front panel.

1. Press , then the roll icon, then **Unload**.
2. You may need to open the roll cover.

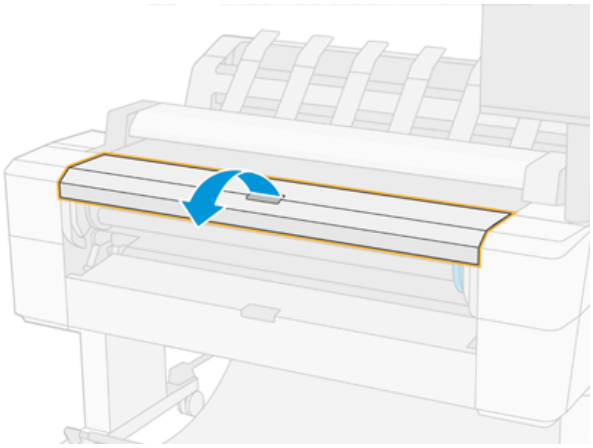

Load a single sheet

The following steps provide the complete procedure for this topic.

1. Measure sheet length before loading (if it is not standard size).

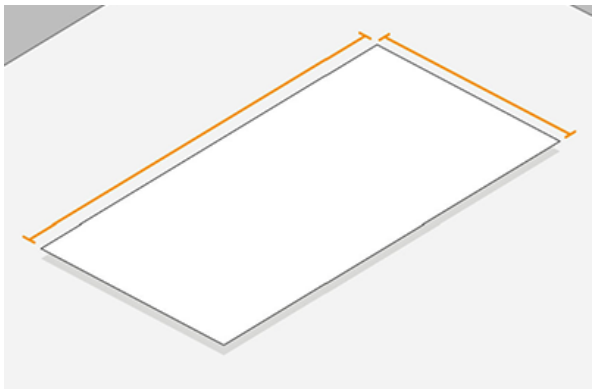

2. Ensure that both roll covers are closed. If a roll cover is opened while a sheet is loaded, the sheet is immediately unloaded.

WARNING! Do not load the sheet before starting the loading process from the front panel.

3. At the front panel, press , then the sheet icon, then **Load** > **Load sheet**.

4. If a roll is already loaded, you have to wait while it is automatically unloaded. The roll is not unloaded, but withdrawn to the standby position, so that it can be printed on again without reloading as soon as the sheet paper has been unloaded.

NOTE: If at any time you open a roll cover while that roll is loaded but not printing, the roll will be automatically unloaded, and you will have to reload it the next time you want to print on it.

5. Select your paper category and type.

TIP: If you have loaded a paper type whose name does not appear in the paper list, see Paper type is not in the driver on page 198.

6. When prompted by the front panel, insert the sheet into the front of the printer.

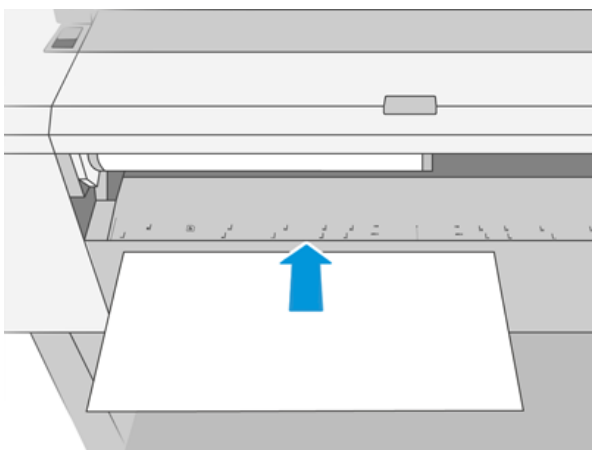

7. Align the left-hand edge of the sheet with the blue line on the left-hand side of the printer.

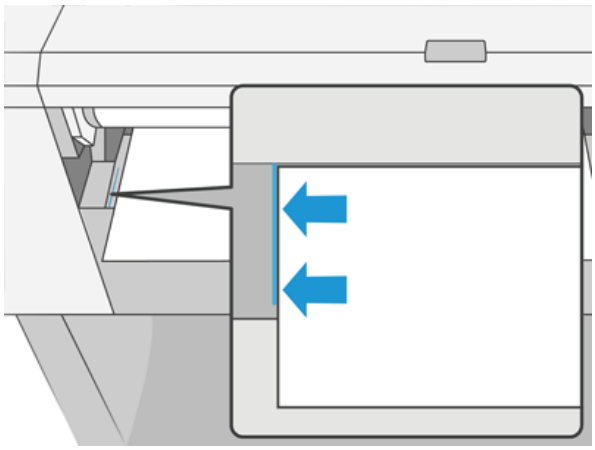

8. Push the sheet into the printer until it will not go any further.

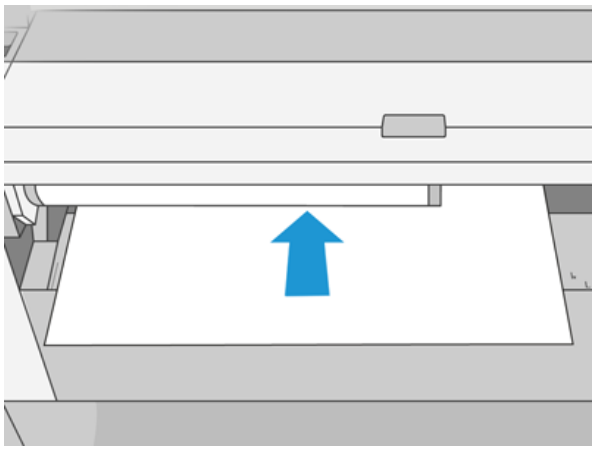

WARNING! Do not push your fingers inside the printer's paper path.

9. Guide the sheet into the printer until the printer beeps and starts pulling the paper.
10. The printer checks the alignment.
11. If the sheet is not correctly aligned, it is ejected, and you will have to try again.

NOTE: If you have an unexpected problem at any stage of the paper loading process, see Paper cannot be loaded successfully on page 196.

The stacker

The following sections provide details for this topic.

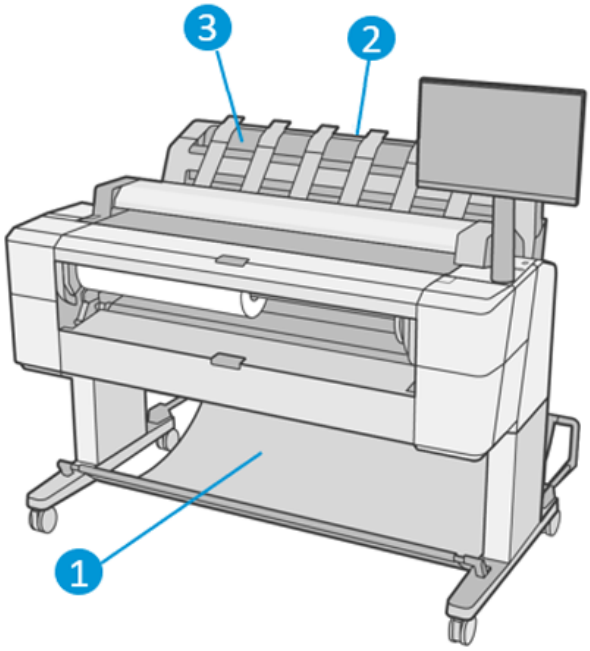

1. Basket
2. Stacker pivoting cover
3. Stacker

General advice

The following steps provide the complete procedure for this topic.

By default, the printer cuts the paper after every print job. The resulting printed sheet of paper is neatly stacked on top of the other printed sheets by the stacker.

To empty the stacker, stand in front of the printer and pull the stack of printed sheets out of the stacker. The stacker cover may open during this process; make sure that it is closed after you have removed the sheets. Normally the return spring will close it automatically.

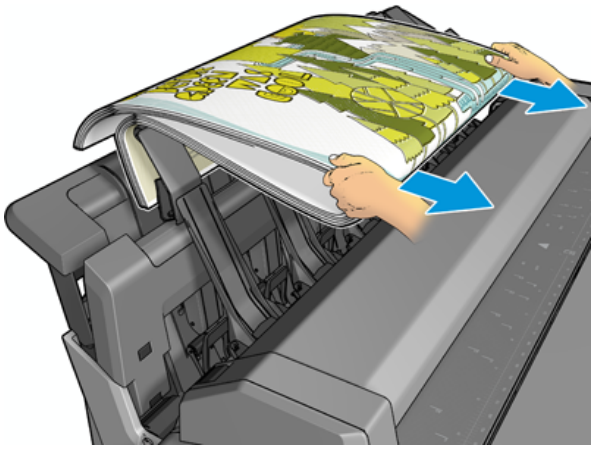

TIP: Although you can remove sheets from the stacker while the printer is printing, you are recommended to remove all the prints together while the printer is not printing.

TIP: You can lock the stacker cover in the open position to collect special jobs. Make sure that you close it afterwards.

TIP: If you want to use a photo paper for printing in normal printing mode to the stacker, you are recommended to use an HP Instant-Dry Photo Paper.

TIP: For stacking papers below 75 gr/m2 activate the blue separators located in the laterals of the stacker cover. Make sure you deactivate them when using the rest of papers.

Manual printing with the stacker open

The stacker's manual printing mode is designed to be used when you want the highest-quality print possible on photo paper, and you are willing to stand in front of the printer to ensure it.

You can choose attended mode either for a particular job (for example, from the printer driver), or by putting the printer into attended mode from the front panel.

- If you send a job with attended mode selected, the job is put on hold, and other jobs can continue printing, until you select it for printing from the front panel (the front panel can guide you through this process) and open the stacker cover.

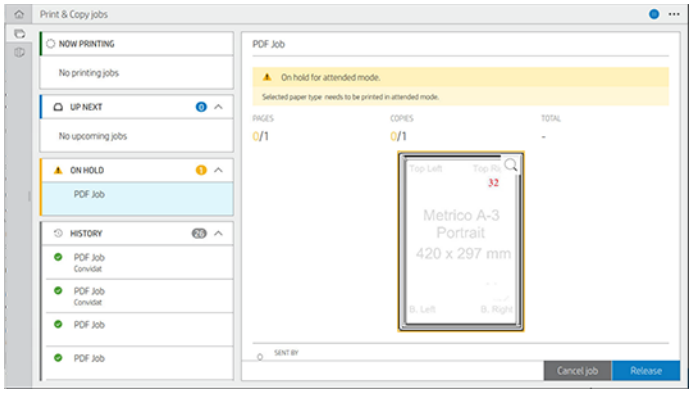

- If you put the printer into manual mode from the front panel, all jobs in the queue are put on hold for manual mode, and you can print them from the queue. When you exit manual mode, any jobs still in the queue return to their previous status.

NOTE: When opening the stacker to enter manual mode, lock the stacker cover into the open position.

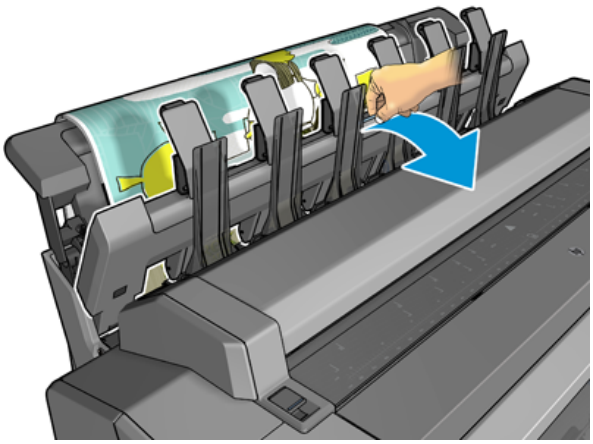

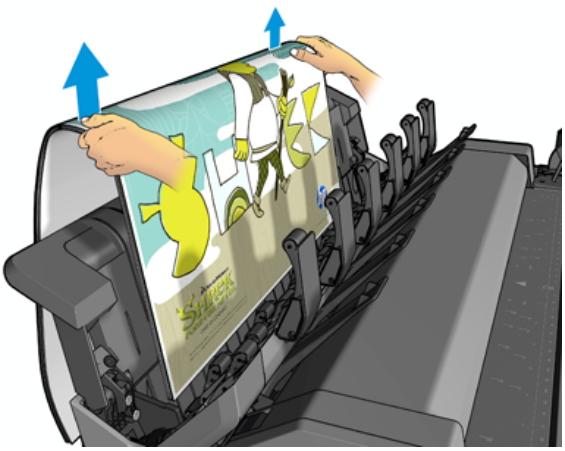

In manual mode:

- You can print only one page at a time. You must start each page manually from the front panel.
- You print with the stacker cover open, and stand in front of the printer to check the print as it emerges.
- With the stacker cover open, you have a better view of the print as it emerges, but the stacker cannot guarantee that the print will follow the correct paper path, so you must watch over it to prevent possible damage.
- You cannot scan or copy because the stacker cover is blocking the scanner.
- If the printer is left idle and in manual mode for more than 15 minutes, manual mode is cancelled, and you are advised to close the stacker.
- You can exit manual mode from the front panel or by closing the stacker.

Manual mode is indicated in various front-panel screens by the icon.

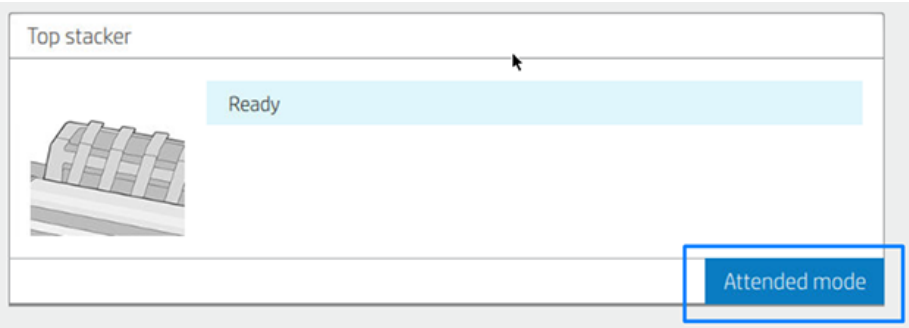

To enter manual mode, on the front panel tap , then **output options** > **top stacker** > **attended mode**.

The basket

The stacker is normally used to collect prints. If you decide not to use the stacker, you can send your prints to the basket. You may decide to use the basket if the stacker is full, or if you want to separate a job from the other jobs printed to the stacker.

The basket can accept up to 10 A1 or D-sized sheets of bond paper. Larger prints should be removed from the basket immediately after printing.

TIP: Ensure that you have routed all cables correctly, so that they do not interfere with paper falling into the basket. Otherwise you may experience paper jams.

View information about the paper

To view the loaded paper information, press , then the roll icon.

The following information is displayed on the front panel:

- The paper type you have selected
- Roll or sheet status
- Width of the paper in millimeters (estimated)
- Length of the paper in millimeters (estimated)
- Calibration status

The same information is displayed in the HP DesignJet Utility for Windows (**Overview** tab > **Supplies** tab) and the HP Utility for Mac OS X (Information group > **Supplies Status**).

Paper presets

Each supported paper type has its own characteristics. For optimum print quality, the printer changes the way it prints on each different paper type. For example, some may need more ink and some may require a longer drying time. So the printer must be given a description of the requirements of each paper type. This description is called the *paper preset*. The paper preset contains the ICC profile, which describes the color characteristics of the paper; it also contains information on other characteristics and requirements of the paper that are not directly related to color. Existing paper presets for your printer are already installed in the printer's software.

However, as it is inconvenient to scroll through a list of all paper types available, your printer only contains paper presets for the most commonly used paper types. If you have a paper type for which your printer has no preset, you cannot select that paper type.

There are two ways to assign a preset for a new paper type.

- Use one of the existing HP factory paper presets by selecting the closest category and type in the front panel or the printer driver. See Paper type is not in the driver on page 198.

NOTE: Colors may not be accurate. This method is not recommended for high-quality prints.

- Download the correct paper preset from http://hp.globalbmg.com/paperpresets.

NOTE: HP provides presets for HP paper types only. If you do not find the paper preset you want on the Web, you may find that it has been added to the latest firmware for your printer. You can check the firmware release notes for information, see Update the firmware on page 180.

To install a downloaded paper preset

The following steps provide the complete procedure for this topic.

1. After finding the right paper preset at http://www.globalbmg.com/hp/paperpresets, or the paper manufacturer's website, click the **Download Now** button and save the paper preset (an **.oms** file) on your computer.

   NOTE: If you do not find the paper preset you want on the Web, you may find that it has been added to the latest firmware for your printer. You can check the firmware release notes for information, see Update the firmware on page 180.

2. Before starting to install the new preset, make sure that the printer is idle and the print queue is stopped. Installing a new paper preset will interrupt any printing that is in progress.
3. Start the HP DesignJet Utility or the Embedded Web Server.
   - In the HP DesignJet Utility for Windows, select the **Color Center** and then **Import Paper Preset**.
   - In the Embedded Web Server, click the **Paper** tab. In the Paper Management section, click the **Import Paper Preset** tab.
4. On the Import page, select the paper preset file that you downloaded in step 1.
5. Click the **Import** button and wait for the update process to finish. It may take some time.
6. Check that the new paper type appears in the **Additional paper** or **Custom paper** category in your printer's front panel.

Now that you have imported the paper preset, you can select the paper type from the front panel and from the driver. The ICC profile for the new paper type is ready to use by your application.

Printing paper info

Enable the **Printing paper info** option to record the printer's estimate of the remaining roll length, paper width and type. The information is a combination of barcode and text that is printed on the leading edge of the roll when the paper is unloaded from the printer.

NOTE: The paper-length estimate is available only if the printer registered the amount of paper that was on the roll when you loaded it. To provide this information to the printer, specify the roll length on the front panel when loading the paper, or load a roll that has the paper-data barcode printed on it.

NOTE: The barcode and text are printed on the roll only when the loading and unloading processes are started from the front panel's Paper menu.

NOTE: This option can be expected to work only with papers that are completely opaque. It may fail with transparent or translucent papers.

To enable the **Printing paper info** option, go to the front panel and press , then **Paper source** > **Printing paper info** > **Enable**.

NOTE: Enabling this option slightly changes the paper loading and unloading procedures.

Move the paper

If the printer is idle (ready to print), you can move the paper forwards or backwards from the front panel. You may want to do this in order to have more or less white space between the last print and the next one when the cutter is disabled; or to increase top margin of the next print.

To move the paper, press , then **Paper source** > **Move paper**.. Alternatively, to move the paper tap at the top of the Front Panel.

Maintain paper

To maintain paper quality, follow the recommendations below.

- Store rolls covered by another piece of paper or cloth
- Store cut sheets covered and clean or brush them before loading them in the printer
- Clean input and output platens
- Keep the scanner lowered unless you need to lift it for some reason

NOTE: Photo and coated paper requires careful handling, see Print is scuffed or scratched on page 212.

Change the drying time

You may wish to change the drying time setting to suit special printing conditions such as multiple prints where time is of higher importance or when you need to be sure ink is dry before handling.

Press ⚙, then **Default printing configuration** > **Print retrieval** > **Drying time**. You can select:

- **Extended**, to set a longer than recommended time to ensure ink is completely dry
- **Optimal**, to set the default and recommended time for your selected paper (this is the default setting)
- **Reduced**, to set a shorter than recommended time when quality is of lower importance
- **None**, to disable the drying time and remove your print as soon as it finishes printing

CAUTION: If the ink is not dry when the print is removed it could leave ink in the output tray and marks on the print.

NOTE: If you cancel the drying time during a print, the printer may not feed and cut the paper right away due to the printhead maintenance, which runs in parallel. If the dry time is zero, the printer cuts the paper and then performs the printhead maintenance. However, if the dry time is greater than zero, the printer does not cut the paper until after the printhead maintenance has completed.

Turn the automatic cutter on and off

To turn the printer's paper cutter on or off:

- From the front panel, press ⚙, then **Default printing configuration** > **Cutter** > **Horizontal cutter**.

The default setting is **On**.

If the cutter is turned off, it does not cut the paper between jobs, but continues to cut the paper on loading, unloading, switching between rolls, and switching between the stacker and the basket.

TIP: To cut roll paper while the automatic cutter is disabled, see Clean cut on page 52.

Clean cut

If you go to the front panel and tap the cutter icon at the top of the page, the printer advances the paper and makes a straight cut across the front edge. There are several possible reasons why you might want to do this.

- To trim the leading edge of the paper if it is damaged or not straight. The cut strip falls into the basket.
- To feed and cut the paper when the automatic cutter has been disabled.

- To cancel the waiting time and print the available pages immediately, if the printer is waiting to nest more pages.

NOTE: The printhead is serviced after each print, and the paper cannot be cut until the process completes, so you may notice a delay.

NOTE: Photo and coated paper requires careful handling, see Print is scuffed or scratched on page 212.

TIP: To move the paper without cutting it, see Move the paper on page 51.

3 Working with two rolls.

The following sections provide details for this topic.

Advantages of a multiroll printer

This topic explains the concepts involved in this subject.

A multiroll printer can be useful in several different ways:

- The printer can automatically switch between different paper types according to your needs.
- The printer can automatically switch between different paper widths according to your needs. This enables you to save paper by printing smaller images on narrower paper.
- If you load two identical rolls into the printer, you can leave it printing unattended for a long time, because it can switch from one roll to the other automatically when the first is exhausted. See Unattended printing/overnight printing on page 87.

The current status of both rolls is shown on the front panel if you tap .

NOTE: Bear in mind that a paper type is protected from use unless that paper type is specifically requested. See Protect a paper type on page 86.

NOTE: If you use a paper not supported by your printer, you may find that automatic switching is disabled, in which case jobs sent to the standby roll are put on hold until the roll is manually unloaded.

NOTE: When you print from a USB flash drive, multiroll printing is considerably simplified: either you specify manually which roll you want to use, or you can select **Save paper**, in which case the printer chooses the narrowest roll on which the print will fit. You cannot specify the paper type.

How the printer allocates jobs to paper rolls

When you submit a print job from the printer driver, you can specify (using the **Paper type** or **Type is** option) that you want it to be printed on a particular paper type; you can even specify (using the **Paper source**, **Source is** or **Paper Feed** option) that you want it to be printed on a particular roll (1 or 2). The printer will try to satisfy these requirements, and it will also look for a paper roll large enough to print the image without clipping.

- If both rolls are suitable for the job, the roll will be chosen according to the roll switching policy. See Roll policies on page 97.
- If just one of the rolls is suitable for the job, it will be printed on that roll.

- If neither roll is suitable for the job, it will be put on hold for paper, or printed on an unsuitable roll, depending on the paper mismatch action. See Solve paper mismatch on page 97.

The printer driver for Windows will tell you which paper types and widths are currently loaded in the printer, and on which rolls.

Here are some settings that may be used in typical situations.

NOTE: The **Paper** settings are in the printer driver; the **Roll switching policy** is set in the front panel.

- With different paper types loaded:
  - **Paper types**: select the paper type you require
  - **Paper source**: Use printer settings
  - **Roll switching policy**: doesn't matter
- With different paper widths loaded:
  - **Paper type**: Use printer settings
  - **Paper source**: Use printer settings
  - **Roll switching policy**: Minimize paper waste

TIP: You can also save paper in some cases by rotating or nesting your images. See Use paper economically on page 83.

- With identical rolls loaded:
  - **Paper type**: Use printer settings
  - **Paper source**: Use printer settings
  - **Roll switching policy**: Minimize roll changes

4 Networking

The following sections provide details for this topic.

Introduction

The embedded Jetdirect print server supports connection to IEEE 802.3 10Base-T Ethernet, IEEE 802.3u 100Base-TX Fast Ethernet, and 802.3ab 1000Base-T Gigabit Ethernet compliant networks.

When connected and powered on, the printer auto-negotiates with your network to operate with a link speed of 10, 100, or 1000 Mbps, and to communicate using full- or half-duplex mode. However, you can manually configure the link using the printer's front panel, or through other configuration tools once network communication is established.

The printer can support multiple network protocols simultaneously, including TCP/IPv4 and TCP/IPv6. For security, it includes features to control IP traffic to and from the printer and supports configuration of IP Security (IPsec) protocols.

Control network protocols

The printer can simultaneously support multiple network communication protocols. This allows network computers that may be using different protocols to communicate with the same printer.

Each protocol may require some configuration before the printer can communicate on the network. For some protocols, required parameters are automatically sensed and user-specified settings are not needed. However, for other protocols, there may be many parameters to configure.

Enable or disable network protocols

If a network protocol is enabled, the printer may actively transmit on the network even when there are no computers on the network that use the protocol. This may increase network traffic. To eliminate unnecessary traffic, you can disable unused protocols. Disabling unused protocols lets you:

- Reduce network traffic by eliminating broadcast messages from unused protocols
- Provide better control over who prints to the printer by eliminating users from other networks who might route print jobs to this printer
- Display protocol-specific error conditions for enabled protocols only

To disable unused protocols through the device's control panel menu, see Front-panel menu items on page 57. More detailed control of network protocols is available in the printer's Embedded Web Server, in the **Networking** section web pages. For other tools, such as system command access to the embedded Telnet server, see the *HP Jetdirect Print Server Administrator's Guide* for your print server model.

Front-panel menu items

To access the printer network configuration settings, go to the front panel and tap , then , then **Network** > **Gigabit Ethernet** > **Modify Configuration**.

Table 4-1 Front-panel menu items

Menu item	Sub-menu item	Sub-menu item	Values and description
Information	Print Sec Report		Yes: Prints a report. No (default): Does not print a report.
TCP/IP	Host Name		An alphanumeric string, up to 32 characters, used to identify the device. This name is listed on the HP Jetdirect configuration page. The default host name is NPIxxxxxx, where xxxxxx is the last six digits of the LAN hardware (MAC) address.

Table 4-1 Front-panel menu items (continued)

Menu item	Sub-menu item	Sub-menu item	Values and description
TCP/IP	IPV4 Settings	Config Method	Specifies the method that TCP/IPv4 parameters will be configured on the HP Jetdirect print server. Bootp: Use BootP (Bootstrap Protocol) for automatic configuration from a BootP server. DHCP (default): Use DHCP (Dynamic Host Configuration Protocol) for automatic configuration from a DHCPv4 server. If selected and a DHCP lease exists, DHCP Release and DHCP Renew menus are available to set DHCP lease options. Auto IP: Use automatic link-local IPv4 addressing. An address in the form 169.254.x.x is assigned automatically. Manual: Use the manual settings menu to configure TCP/IPv4 parameters.
		DHCP Release	This menu appears if Config Method was set to DHCP and a DHCP lease for the print server exists. Yes (default): The current DHCP lease is saved. No: The current DHCP lease and the leased IP address are released.
		DHCP Renew	This menu appears if Config Method was set to DHCP and a DHCP lease for the print server exists. No (default): The print server does not request to renew the DHCP lease. Yes: The print server requests to renew the current DHCP lease.
		Manual Settings	(Available only if Config Method is set to Manual) Configure parameters directly from the printer control panel: IP Address: The unique IP address of the printer (n.n.n.n). Subnet Mask: The subnet mask for the printer (n.n.n.n). Default Gateway: The IP address (n.n.n.n) of the gateway or router used for communications with other networks. Idle Timeout: The time period, in seconds, after which an idle TCP print data connection is closed (default is 270 seconds, 0 disables the timeout).
		Default IP	Specify the IP address to default to when the print server is unable to obtain an IP address from the network during a forced TCP/IP reconfiguration (for example, when manually configured to use BootP or DHCP). Auto IP: A link-local IP address 169.254.x.x is set. Legacy: The address 192.0.0.192 is set, consistent with older HP Jetdirect devices.
		Primary DNS	Specify the IP address (n.n.n.n) of a Primary DNS Server. **NOTE:** This item appears only if Manual configuration is a higher priority than DHCP in the Config Precedence table, configured through the embedded Web server.
		Secondary DNS	Specify the IP address (n.n.n.n) of a Secondary Domain Name System (DNS) Server. **NOTE:** This item appears only if Manual configuration is a higher priority than DHCP in the Config Precedence table, configured through the embedded Web server.

Table 4-1 Front-panel menu items (continued)

Menu item	Sub-menu item	Sub-menu item	Values and description
TCP/IP	IPV6 Settings	Enable	Use this item to enable or disable IPv6 operation on the print server. Off: IPv6 is disabled. On (default): IPv6 is enabled.
		Address	Use this item to manually configure an IPv6 address. Manual settings: Use the Manual settings menu to enable and manually configure a TCP/IPv6 address. Enable: Select this item and choose On to enable manual configuration, or Off to disable manual configuration. Address: Use this item to type a 32 hexadecimal digit IPv6 node address that uses the colon hexadecimal syntax.
		DHCPV6 Policy	Router Specified: The stateful auto-configuration method to be used by the print server is determined by a router. The router specifies whether the print server obtains its address, its configuration information, or both from a DHCPv6 server. Router unavailable: If a router is not available, the print server should attempt to obtain its stateful configuration from a DHCPv6 server. Always: Whether or not a router is available, the print server always attempts to obtain its stateful configuration from a DHCPv6 server.
		Primary DNS	Use this item to specify an IPv6 address for a primary DNS server that the print server should use. **NOTE:** This item appears only if Manual configuration is a higher priority than DHCP in the Config Precedence table, configured through the embedded Web server.
		Secondary DNS	Use this item to specify an IPv6 address for a secondary DNS server that the print server should use. **NOTE:** This item appears only if Manual configuration is a higher priority than DHCP in the Config Precedence table, configured through the embedded Web server.
TCP/IP	Web Proxy	Proxy Server	Specifies the proxy server to be used by embedded applications in the device. A proxy server is typically used by network clients for Internet access. It caches Web pages, and provides a degree of Internet security, for those clients.
		Proxy Port	To specify a proxy server, enter its IPv4 address or fully-qualified domain name. The name can be up to 255 octets. For some networks, you may need to contact your Independent Service Provider (ISP) for the proxy server address. Type the port number used by the proxy server for client support. The port number identifies the port reserved for proxy activity on your network, and can be a value from 0 to 65535.

Table 4-1 Front-panel menu items (continued)

Menu item	Sub-menu item	Sub-menu item	Values and description
Security	Secure Web		For configuration management, specify whether the embedded Web server will accept communications using HTTPS (Secure HTTP) only, or both HTTP and HTTPS. HTTPS: For secure, encrypted communications, only HTTPS access is accepted. The print server will appear as a secure site. HTTP/HTTPS: Access using either HTTP or HTTPS is permitted. **NOTE:** The factory default setting depends on the print server model.
	IPSEC		Specify the IPsec or Firewall status on the print server. Keep: IPsec/Firewall status remains the same as currently configured. Disable: IPsec/Firewall operation on the print server is disabled.
	802.1x		
	Reset Security		Specify whether the current security settings on the print server will be saved or reset to factory defaults. No (default): The current security settings are maintained. Yes: Security settings are reset to factory defaults.
Link Speed			The link speed and communication mode of the print server must match the network. The available settings depend on the device and installed print server. Select one of the following link configuration settings: **CAUTION:** If you change the link setting, network communications with the print server and network device might be lost. Auto (default): The print server uses auto-negotiation to configure itself with the highest link speed and communication mode allowed. If auto-negotiation fails, either 100TX HALF or 10TX HALF is set depending on the detected link speed of the hub/switch port. (A 1000T half-duplex selection is not supported.) 10T Half: 10 Mbps, half-duplex operation. 10T Full: 10 Mbps, Full-duplex operation. 10T Auto: Limits auto-negotiation to a maximum link speed of 10 Mbps. 100tx Half: 100 Mbps, half-duplex operation. 100tx Full: 100 Mbps, full-duplex operation. 100tx Auto: Limits auto-negotiation to a maximum link speed of 100 Mbps. 1000 Full: 1000 Mbps, full-duplex operation.

Link configuration methods

The printer supports 10, 100, or 1000 Mbps network link speeds using full-duplex or half-duplex communication modes (a 1000T half-duplex selection is not supported). By default, it will attempt to auto-negotiate its link operation with the network.

When connecting to network hubs and switches that do not support auto-negotiation, the printer will configure itself for 10 Mbps or 100 Mbps half-duplex operation. For example, when connected to a non-negotiating 10 Mbps hub, the print server will automatically set itself to operate at 10 Mbps half-duplex.

If the printer is not able to connect to the network through auto-negotiation, you can set the link setting by one of the following methods:

- The front panel
- The Embedded Web Server
- The Telnet interface, through a system command prompt
- Network management tools such as HP Web Jetadmin

Troubleshooting

The following sections provide details for this topic.

IO Configuration card

To verify correct operation:

The IO Configuration card provides comprehensive print server status. The information provided is an important diagnostic tool, especially if network communication is not available. For a description of messages that may appear on the card, see the *HP Jetdirect Print Servers Administrator's Guide* for your print server model.

For detailed connectivity information, go to the **Connectivity** menu and click **Network card** or **Services card** to see all the information available.

The network card provides details about the network configuration and status. The services card provides information about the state of connections to HP services, such as HP ePrint.

1. On the network card, look for the status message **I/O Card Ready**.
2. If **I/O Card Ready** appears, the print server is operating properly. Proceed to the next section.

   If a message other than **I/O Card Ready** appears, try the following:

   a. Turn the printer off and then on again to re-initialize the print server.

   b. Check that the status indicator lights (LEDs) are providing proper status.

See the *HP Jetdirect Print Servers Administrator's Guide* for your print server model to interpret and troubleshoot other messages.

Reset network parameters

If you accidentally misconfigured the printer's network settings, they can be reset to factory default values by tapping , then , then **Network** > **Restore connectivity factory settings**.

⚠ **CAUTION:** A factory-installed HP Jetdirect X.509 certificate will be saved during reset to factory default values. However, a Certificate Authority (CA) certificate that has been installed by the user to validate a network authentication server will not be saved.

Link troubleshooting

If a link failure is indicated, try the following:

The printer has status lights (LEDs) beside the network connector that indicate the link status and network activity.

- When the green light is on, the printer has successfully linked to the network.
- When the yellow light is blinking, there is network transmission activity.

If the printer does not successfully connect to the network:

- Both LEDs will be off.
- The alert **No network cable connected** will appear on the front panel.

1. Check the cable connections at both ends.
2. Consider replacing the cables by known good ones.
3. Consider switching to another network connector in the network switch, hub, or device to which the printer is connected.
4. Manually configure the link setting to match the port configuration of the network hub or switch. For manual configuration methods, see Link configuration methods on page 60. Turn the printer off, then on again, to re-initialize the setting.
5. Print a Connectivity Configuration page and check link settings.

Table 4-2 Settings

Item	Description
Port Config	If the printer is properly linked, this item has one of the following values: • **10BASE-T HALF**: 10 Mbps, half-duplex • **10BASE-T FULL**: 10 Mbps, full-duplex • **100TX-HALF**: 100 Mbps, half-duplex • **100TX-FULL**: 100 Mbps, full-duplex • **1000TX FULL** If the printer is not properly linked, one of the following messages will appear: • **UNKNOWN**: The printer is in an initialization state. • **DISCONNECTED**: A network connection has not been detected. Check network cables. Reconfigure the link settings, or restart the printer.
Auto Negotiation	Indicates whether auto-negotiation for link configuration is on or off. • **ON** (default): The printer will attempt to automatically configure itself onto the network at the proper speed and communication mode. • **OFF**: You must manually configure the link speed and communication mode using the front panel. Your settings must match those of the network for proper operation.

6. In case of doubt or misconfiguration of link settings, reset the network parameters to their factory settings. See Reset network parameters on page 62.

Communication failures between computer and printer

This topic explains the concepts involved in this subject.

Some symptoms are:

- The front-panel display does not show the **Received jobs** message when you have sent jobs to the printer.
- Your computer displays an error message when you are trying to print.
- Your computer or printer hangs (stays idle), while communication is taking place.
- Print jobs get stuck in your computer's print spooler.
- Your printed output shows random or inexplicable errors (misplaced lines, partial graphics, and so on).

To solve a communication problem:

- Ensure that you have selected the correct printer when sending your job.
- Ensure that the printer works correctly when printing from other applications.
- If your printer is connected to your computer through any other intermediate devices, such as switch boxes, buffer boxes, cable adapters, or cable converters, try using it when connected directly to your computer.
- Try another network cable.
- Remember that very large prints may take some time to receive, process and print.
- If your printer displays warning or error messages that require action, take the required action before trying to print.

Cannot access the Embedded Web Server

The following steps provide the complete procedure for this topic.

1. If you have not done so already, read Embedded Web Server on page 14.
2. Make sure that Embdedded Web Server functionality is enabled in the printer: from the front panel, tap ⚙, then **Security** > **Connectivity** > **Embedded Web Server (EWS)** > **On**.
3. Check the proxy configuration in your Web browser in case it is preventing communication with the printer.
4. Ensure that the printer works correctly when printing or accessed from other applications.
5. If the printer displays warning or error messages that require further action, take the action to resolve the problems.
6. If all else fails, turn the printer off and on again with the power key on the front panel.

Cannot access the printer from the HP Utility

The following steps provide the complete procedure for this topic.

1. If you have not done so already, read HP Utility on page 13.
2. Make sure your printer is not in sleep mode.
3. Make sure your printer driver is available and working correctly for the HP Utility in Windows.
4. From the front panel, tap ⚙, then **Security** > **Web services** > **Printing & management**, and make sure that it is enabled. If it is disabled, some parts of the HP Utility may not work properly.

Print jobs take too much time to be received by the printer

This topic explains the concepts involved in this subject.

If you send a very large print to the printer, there will normally be some delay before it starts printing. However, if you think you are experiencing abnormally long delays, there are various things you could check:

- Make sure the network cable connected to the printer is rated at least Cat5e.
- Make sure that gigabit-speed networking equipment and cabling interconnects your computer client to the printer.
- Make sure that there are no network link issues. See Link troubleshooting on page 62.
- Take into account that, in network deployments with IPSec security protocols enabled and configured in the printer, network performance may be reduced due to the use of cryptographic algorithms to protect network communications.
- Try resetting the network configuration to its factory settings in order to get default settings that are suitable for most standard network environments. See Reset network parameters on page 62.
- You may also find it helpful to test connecting the computer to the printer directly, using a normal Ethernet (Cat5e or Cat6) cable point-to-point, without passing through an Ethernet switch or router. In this configuration, the printer and the computer should both automatically change their IPv4 addresses to the form 169.254.x.x . In this point-to-point configuration you can discard any issues caused by other network equipment.

Wi-Fi accessory

This printer supports the use of wireless networking (Wi-Fi) with the optional HP Jetdirect 3100w BLE/NFC/Wireless Accessory.

Wireless functionality

The Wi-Fi accessory allows the printer to connect directly to an existing 2.4GHz or 5GHz 802.11b/g wireless network. Almost all the same network protocols are available over a Gigabit Ethernet LAN cable and wireless: the printer can be discovered, configured and managed, a print queue installed, and printing or scanning can be performed without the need for a LAN cable to the printer.

NOTE: The printer can be connected to a gigabit Ethernet cable network and a wireless network simultaneously. When Ethernet and wireless are used at the same time, the printer obtains a different IP address configuration for each.

The printer also supports Wi-Fi Direct, which allows devices to print wireless without having to be connected to the same Wi-Fi network as the printer. WiFi Direct may be used whether or not the printer is connected to a Wi-Fi network.

NOTE: This printer does not currently support the Near Field Communications (NFC) or Bluetooth Low Energy (BLE) features mentioned in this accessory.

Wireless data speed

Wireless communication maximum speed is lower than a Gigabit LAN cable connection. The data capacity available on wireless channels varies over time because it is shared with other devices. Wi-Fi connection quality and speed depends on the distance between the printer and its Wi-Fi access point along with the amount of radio interference present in the area.

Install the accessory

The following sections provide details for this topic.

Step 1 - Update the print firmware

Update the printer firmware to ensure printer compatibility and maintain regulatory compliance.

Make sure the Jetdirect accessory is disconnected from the printer. See the *HP Jetdirect Print Server Administrator's Guide*.

Step 2 - Power off and connect the accessory

The following steps provide the complete procedure for this topic.

IMPORTANT: Switch off the printer before you connect the Wi-Fi accessory.

The Jetdirect accessory is connected to the Hardware Integration Pocket (HIP2), found underneath a removable cover near the front panel.

1. Turn the printer off and disconnect the power cord.
2. Take the short USB cable with the white 5-pin connector that came with the accessory.
3. Locate the printer's Hardware Integration Pocket (HIP2).

4. Using a thin flat-bladed screwdriver, gently open the cover along either short edge to expose the Hardware Integration Pocket (HIP2).

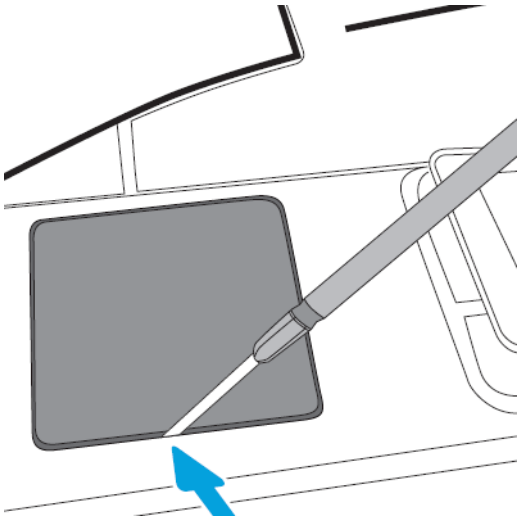

5. Connect the white 5-pin connector from the short USB cable to the HP Jetdirect slot.

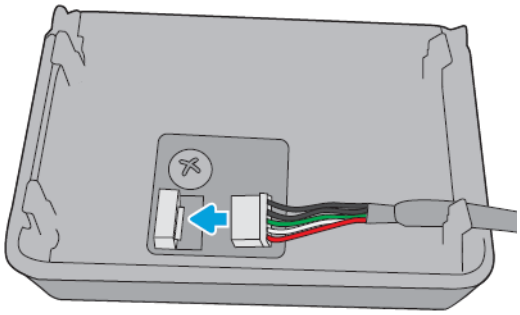

6. Connect the USB Type-A (flat) end of the cable to the port inside the HIP2.

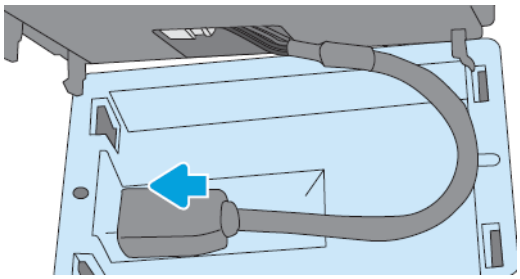

7. Align and insert the HP Jetdirect's hook-shaped clips into the HIP2, then gently press the HP Jetdirect onto the rounded clips until it is held securely in place.

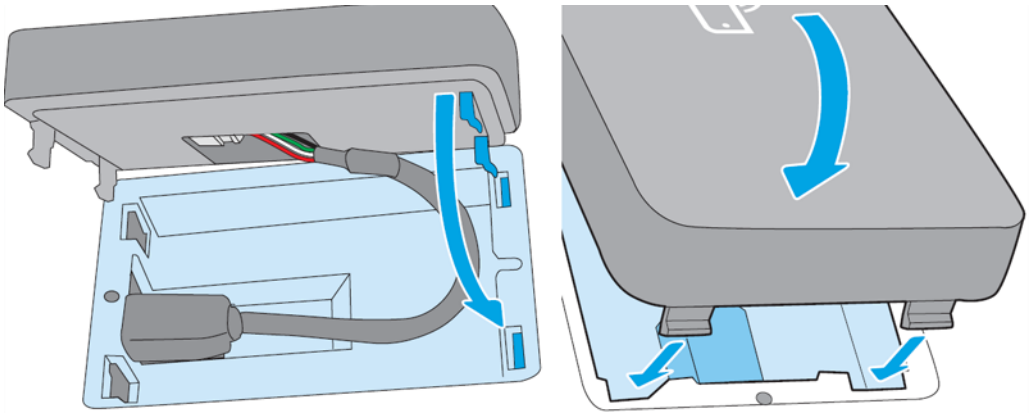

8. Connect the printer's power cord and turn the printer on.

NOTE: If a USB error message is appears on the front panel, make sure that the latest printer firmware is installed.

9. Verify that HP Jetdirect is correctly installed using these steps:

10. Tap in the front panel, and check that details appear for two additional interfaces: Wireless and Wi-Fi direct, as well as wired Gigabit Ethernet. If the Wi-Fi interfaces are displayed, then HP Jetdirect is correctly installed.

NOTE: The front panel displays the message **Not connected to any wireless network check wireless configuration**. This is normal because there are steps missing related to the configuration.

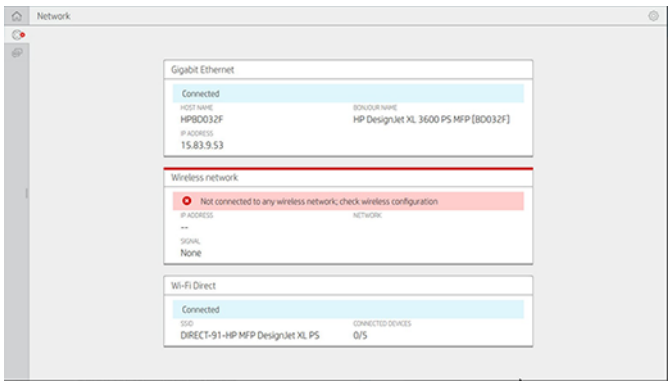

NOTE: If the wireless interfaces are not listed in , switch the printer off and check that the USB cable is securely connected to the HP Jetdirect and the printer.

Connect your printer to a Wi-Fi network

The following sections provide details for this topic.

Use the front panel

The following steps provide the complete procedure for this topic.

The easiest way to connect the printer to a Wi-Fi network is from the printer's front panel. Choose the network and enter the Wi-Fi password.

1. Make sure you know your Wi-Fi network name (SSID) and your Wi-Fi security password (WPA, or WPA2).
2. In the front panel, tap > **Wireless Network** and select **Connect**. The Wireless Setup Wizard displays a list of wireless networks in the area.
3. Select your wireless network's name from the list.
4. If you don't see your wireless network listed, you can enter the network name manually. Tap the **Options icon** in the bottom right corner and select **Add Network**. The name you enter must be exact, including upper- and lower-case characters.
5. Enter your WPA password. Enter the key or password exactly, including uppercase and lowercase characters, then tap **next**. The printer should connect to your wireless network.

NOTE: For a WPA Enterprise password, configuration must be done via the Embedded Web Server.

Connect to a Wi-Fi network with the WPS

WPS (Wi-Fi Protected Setup) has two modes (**pushbutton** and **PIN**) to connect devices over a wireless connection. Pushbutton is by far the simplest method. Below, how to connect using the WPS pushbutton method is described, but not the PIN method.

- Both your printer and wireless router must support WPS pushbutton mode. Consult your printer and wireless router manuals.
- The wireless router must have a physical WPS pushbutton available.
- Your network must use WPA or WPA2 security. Most WPS wireless routers will not connect using the WPS method if WEP or no security is used.
- Most WPS wireless routers will not connect using the WPS method if you are using the manufacturer's default for the network name and no security.

To connect your wireless printer to your wireless router using WPS:

- In the front panel, tap , then , then **Pushbutton**. In the **Network** menu, choose **Wireless Station** > **Modify configuration** > **Wireless station** > **Wi-Fi protected setup** > **Pushbutton**.
- Tap **Apply**.
- Within the next 2 minutes, press the WPS button on your router.

Connect to a Wi-Fi network with the printer's Embedded Web Server

If you use a more advanced wireless network configuration such as WPA/WPA2 Enterprise, you need to initially connect the printer using an Ethernet cable and access the printer's **Embedded Web Server pages** > **Network Configuration** > **Wireless Station** to complete the detailed Wi-Fi configuration.

Print with Wi-Fi Direct

Wi-Fi Direct can be used even when the printer and host are not connected to a network (wired or wireless): a temporary Wi-Fi connection is established automatically between both devices for the print duration.

Step 1 - Setup the printer

The following steps provide the complete procedure for this topic.

1. Turn on Wireless Direct in the printer.
2. Obtain the Wireless Direct name (SSID) and password in the front panel. Consult the Wi-Fi Direct card in the front panel, tap .

Step 2a - (Android 4.4 onwards) setup a laptop, phone, or tablet

The following steps provide the complete procedure for this topic.

1. Wi-Fi Direct has to be enabled on the printer. You can set the connection mode to **Automatic** or **Manual**.
2. Wi-Fi Direct has to be enabled on the mobile device (Android 4.4 or newer).
3. You must install the latest version of the HP Print plug-in on the mobile device (version 1.0.48 or newer).
4. On the mobile device, choose a document from a print enabled application. The printer will show up automatically (Direct-xx-HP-< printer model >) on a list of available printers within Wi-Fi range.
5. Choose the printer and select **Print**. If the Wi-Fi Direct mode is set to **Automatic**, the mobile device will automatically connect to the printer and print the document. If the Wi-Fi Direct mode on the printer is set to **Manual**, you have to acknowledge the connection; tap the printer display or Wi-Fi Direct button when prompted, or enter a PIN code provided by the printer into the mobile device.
6. When connected this way, the mobile device can maintain a current network connection and continue to have an internet connection while it prints.

Step 2b - (Windows 8.1 onwards) use Windows Wi-Fi Direct to print

The following steps provide the complete procedure for this topic.

1. Wi-Fi Direct has to be enabled on the printer.
2. From the Windows Start/Metro menu, tap the magnifying glass in the top right corner.
3. In the search field, type `Devices and Printers` and tap **Enter**.
4. In the **Devices and Printers** window, tap **Add a Device** in the top left corner.
5. Select the printer's Wi-Fi Direct name to be installed and tap **Next**.

   NOTE: The Wi-Fi Direct name can be obtained from the Wi-Fi Direct menu in the printer's front panel.

6. A PIN code is displayed in the front panel.
7. When prompted, enter the PIN code into the Add a Device wizard on the computer and tap **Next**.
8. The print drivers are installed and the newly installed printer icon is displayed in the **Devices and Printers** window.

Turn Wi-Fi direct on/off

The following sections provide details for this topic.

NOTE: If you turn off Wi-Fi Station mode (used to connect to Wi-Fi access points) it does not turn off Wi-Fi Direct.

Method one: Use the control panel to turn on/off Wi-Fi (but not Wi-Fi Direct)

The following steps provide the complete procedure for this topic.

1. In the front panel, tap then **Network** > **Wireless Station** > **Modify Configuration** > **Status** > **Enable/Disable**.
2. Tap **Apply**.

Method two: Use the HP Embedded Web Server to turn on/off Wi-Fi (but not Wi-Fi Direct)

The following steps provide the complete procedure for this topic.

1. Connect to the printer's Embedded Web Server using a wired, Wi-Fi or Wi-Fi Direct connection.
2. From the menu in the left of the page, choose **Networking** > **Wireless Station**.
3. Choose whether you want Wi-Fi **Enabled** or **Disabled**.
4. Tap **Apply**.

More information

Mobile printing.

www.hp.com/go/MobilePrinting

Wireless Direct Print: Wireless Printing Center - Wireless Direct Print HP Jetdirect 3000w: www.hp.com/support/jd3100w

5 Printing

There are various different ways in which you can choose to print, depending on your circumstances and preferences.

- Print a TIFF, JPEG, HP-GL/2, RTL, PDF, or PostScript file directly from a USB flash drive. See Print from a USB flash drive on page 73.
- Print a TIFF, JPEG, HP-GL/2, or PDF file directly from a computer connected to the printer, using HP Click. See http://www.hp.com/go/DesignJetclick.
- Print any kind of file from a computer connected to the printer, using a software application that can open the file, and a printer driver supplied with your printer. See Print from a computer using a printer driver on page 76.
- Print from a smartphone or tablet. See Mobile printing on page 88.
- Print from a network folder. See Print from the network folder on page 74.
- Print from **My Home Folder**. See Print from My Home Folder on page 75.

Introduction

This topic explains the concepts involved in this subject.

There are various different ways in which you can choose to print, depending on your circumstances and preferences:

- Print a TIFF, JPEG, HP-GL/2, RTL, PDF, or PostScript file directly from a USB flash drive. See Print from a USB flash drive on page 73.
- Print a TIFF, JPEG, HP-GL/2, or PDF file directly from a computer connected to the printer, using HP Click. See http://www.hp.com/go/DesignJetclick.
- Print any kind of file from a computer connected to the printer, using a software application that can open the file, and a printer driver supplied with your printer. See Print from a computer using a printer driver on page 76.
- Print from a smartphone or tablet. See Mobile printing on page 88.
- Print from a network folder. See Print from the network folder on page 74.
- Print from **My Home Folder**. See Print from My Home Folder on page 75.

Print from a USB flash drive

The following steps provide the complete procedure for this topic.

1. Insert a USB flash drive containing one or more TIFF, JPEG, HP-GL/2, RTL, PDF, or PostScript files into the printer's USB port.

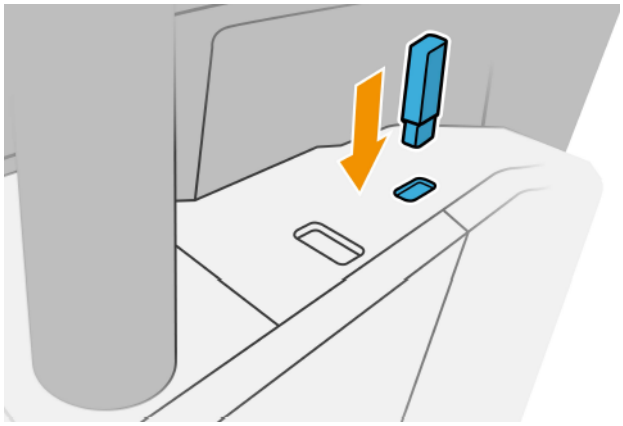

NOTE: To print PDF or PostScript file, you must have a PostScript printer.

NOTE: The use of USB flash drives with your printer may be disabled by the administrator.

2. At the front panel, go to the home page and tap .

   You can tap folders to browse their contents. Files are shown as document thumbnails, and you can preview a file by tapping the preview icon. When the preview is displayed, you can zoom in and out. Files that cannot be printed are indicated with . For more details, press the information button.

3. Select .

4. Select a file to be printed. A preview of the document is displayed. Multipage documents are supported only in PDF files; in this case, you can also select a page to print. Use the toolbar buttons to zoom in and out to see information about the selected job. You can also choose the predefined zoom modes **fit to screen**, **pinch to zoom** or **original document size**. Press **OK** to go to the quickset selection.

5. The list of print-from-USB quicksets is displayed. You can choose and/or edit one of the quicksets for the selected job.

NOTE: If you edit a quickset after selecting a job, the changed settings are applied only to the current job and are not saved permanently. You can change any of your own quicksets permanently by tapping , then **manage quicksets** , or by tapping , then **Quicksets**.

NOTE: The factory quicksets cannot be modified.

The following settings are available:

- **Quickset name** allows you to name the quickset you are working with.
- **Print quality** allows you to set the print quality to **Fast**, **Normal**, or **Best**.

- **Output scale** allows you to resize the print in two different ways: to a percentage of its original size, or to fit a particular paper size. The default is 100% (its original size).
- **Color options** allows you to choose color or grayscale.
- **Paper source** allows you to specify printing on roll 1 or roll 2, or you can choose **Save paper**, which automatically chooses the narrowest roll on which the print will fit (if two rolls are loaded).
- **Paper category** allows you to choose the type of paper.
- **Page order** allows you to choose first page on top, or last page on top.
- **Collate** allows you to turn collation on or off.
- **Rotation** allows you to rotate the print by any multiple of 90°, or you can choose **Automatic**, which rotates the print automatically if that will save paper.
- **Print margins** allows you to change the default printer margins.
- **Storage mode** offers two options, print and delete (the job is not retained in the job queue) and print and store (the job is retained in the job queue).
- **Output destination**.

6. When you are satisfied with the quickset settings, tap **OK** to continue. You can tap ···, then **show quickset details panel** to show the most common quickset settings used.
7. **Copies**, **Page order**, and **Collate** can be selected in the right column of the screen. Tap **Print** to continue.
8. After printing, you can choose to print another file or go to the job queue. If you print another file immediately without returning to the home page, the temporary settings used for the previous file are used again.

Print from the network folder

The following steps provide the complete procedure for this topic.

1. Confirm the network folder is configured. See Configure a network folder on page 24.
2. At the front panel, go to the home page and tap
3. Select **Network**.
4. Select a file to be printed. Multipage documents are only supported in PDF; in this case, you can also select a page to print.
5. The list of print-from-Network quicksets is displayed. You can choose and/or edit one of the quicksets for the selected job.

NOTE: If you edit a quickset after selecting a job, the changed settings are applied only to the current job and are not saved permanently. You can change any of your own quicksets permanently by tapping , then **manage quicksets** , or by tapping , then **Quicksets**.

NOTE: The factory quicksets cannot be modified.

The following settings are available:

- **Quickset name** allows you to name the quickset you are working with.
- **Print quality** allows you to set the print quality to **Fast**, **Normal**, or **Best**.
- **Output scale** allows you to resize the print in two different ways: to a percentage of its original size, or to fit a particular paper size. The default is 100% (its original size).
- **Color options** allows you to choose color or grayscale.
- **Paper source** allows you to specify printing on roll 1 or roll 2, or you can choose **Save paper**, which automatically chooses the narrowest roll on which the print will fit (if two rolls are loaded).
- **Paper category** allows you to choose the type of paper.
- **Page order** allows you to choose first page on top, or last page on top.
- **Collate** allows you to turn collation on or off.
- **Rotation** allows you to rotate the print by any multiple of 90°, or you can choose **Automatic**, which rotates the print automatically if that will save paper.
- **Print margins** allows you to change the default printer margins.
- **Storage mode** offers two options, print and delete (the job is not retained in the job queue) and print and store (the job is retained in the job queue).
- **Output destination**.

6. When you are satisfied with the quickset settings, tap **OK** to continue. You can tap ···, then **show quickset details panel** to show the most common quickset settings used.
7. **Copies**, **Page order**, and **Collate** can be selected in the right column of the screen. Tap **Print** to continue.
8. After printing, you can choose to print another file or go to the job queue. If you print another file immediately without returning to the home page, the temporary settings used for the previous file are used again.

Print from My Home Folder

The following steps provide the complete procedure for this topic.

NOTE: You need to configure the **LDAP - sign-in server** or **Windows sign-in configuration** to be able to print from **My Home Folder**. See LDAP - sign-in server on page 29 or Windows sign-in configuration on page 30.

1. At the front panel, go to the home page and tap .
2. Select **My Home Folder**.
3. Authenticate with **LDAP - sign-in server** or **Windows sign-in configuration** . Go to ··· at the top of the page and select the option you wish to use for authentication. See LDAP - sign-in server on page 29 or Windows sign-in configuration on page 30.
4. Select a file to be printed. Multipage documents are only supported in PDF; in this case, you can also select a page to print.

5. The list of **print-from-My Home Folder** quicksets is displayed. You can choose and/or edit one of the quicksets for the selected job.

NOTE: If you edit a quickset after selecting a job, the changed settings are applied only to the current job and are not saved permanently. You can change any of your own quicksets permanently by tapping , then **manage quicksets** , or by tapping , then **Quicksets**.

NOTE: The factory quicksets cannot be modified.

The following settings are available:

- **Quickset name** allows you to name the quickset you are working with.
- **Print quality** allows you to set the print quality to **Fast**, **Normal**, or **Best**.
- **Output scale** allows you to resize the print in two different ways: to a percentage of its original size, or to fit a particular paper size. The default is 100% (its original size).
- **Color options** allows you to choose color or grayscale.
- **Paper source** allows you to specify printing on roll 1 or roll 2, or you can choose **Save paper**, which automatically chooses the narrowest roll on which the print will fit (if two rolls are loaded).
- **Paper category** allows you to choose the type of paper.
- **Page order** allows you to choose first page on top, or last page on top.
- **Collate** allows you to turn collation on or off.
- **Rotation** allows you to rotate the print by any multiple of 90°, or you can choose **Automatic**, which rotates the print automatically if that will save paper.
- **Print margins** allows you to change the default printer margins.
- **Storage mode** offers two options, print and delete (the job is not retained in the job queue) and print and store (the job is retained in the job queue).
- **Output destination**.

6. When you are satisfied with the quickset settings, tap **OK** to continue. You can tap ···, then **show quickset details panel** to show the most common quickset settings used.

7. **Copies**, **Page order**, and **Collate** can be selected in the right column of the screen. Tap **Print** to continue.

8. After printing, you can choose to print another file or go to the job queue. If you print another file immediately without returning to the home page, the temporary settings used for the previous file are used again.

Print from a computer using a printer driver

This is the traditional way of printing from a computer.

The correct printer driver must be installed on the computer (see Install your printer under Windows on page 16), and the computer must be connected to the printer.

When the printer driver has been installed and the computer is connected to the printer, you can print from a software application by using the application's own **Print** command and selecting the correct printer.

Advanced print settings

The rest of this chapter explains the various print settings that you can use when printing with a printer driver or the front panel. These methods offer a relatively large number of settings in order to satisfy all requirements.

TIP: In general you are recommended to use the default settings unless you know that they do not meet your requirements.

TIP: If you intend to reuse a particular group of settings repeatedly, you can save those settings under a name of your own choice and recall them later. A saved group of settings is known as a 'quick set' in the Windows printer driver, and as a 'preset' in the Mac OS printer driver.

Select print quality

The printer has various print-quality options because best-quality printing requires some loss of speed, while fast printing implies some reduction in print quality.

Therefore, the standard print-quality selector is a slider that allows you to choose between quality and speed. With some paper types, you can choose a compromise position between the two.

Alternatively, you can select from the custom options: **Best**, **Normal** and **Fast**. If you select **Fast**, you can also select **Economode**, which uses a lower rendering resolution and consumes less ink. It therefore increases printing speed even further, but reduces print quality. **Economode** can be selected only from the custom options (not from the slider).

There is also a supplementary custom option that may have an effect on print quality: **Maximum detail**. See High-quality printing on page 82.

NOTE: In the Windows driver dialog, the rendering resolution for your job is displayed in the Custom Print Quality Options dialog box (click **Custom options** > **Settings**).

You can select print-quality options in the following ways:

- **In the Windows driver dialog:** Go to the **Paper/Quality** or **Paper** tab (depending on the driver version) and look at the Print Quality section. If you use **Standard Options**, you will see a simple slider with which you can select speed or quality. If you use **Custom Options** or **Advanced** (depending on the driver version), you will see the more specific options described above.

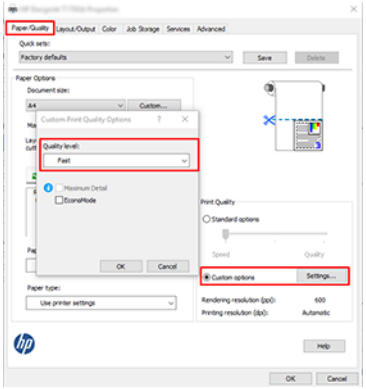

- **Using the front panel:** Tap ⚙, then **Default printing configuration** > **Print quality**.

NOTE: If the print quality is set from your computer, it overrides the print-quality setting in the front panel.

NOTE: You cannot change the print quality of pages that the printer is already receiving or has already received (even if they have not started to print yet).

Select paper size

The paper size can be specified in the following ways.

NOTE: The paper size specified here should be the paper size in which the document was created. It is possible to rescale the document to a different size for printing. See Rescale a print on page 81.

- **In the Windows driver dialog:** Select the **Paper/Quality** or **Paper** tab (depending on the driver version), then select your paper size from the **Document Size** list.

NOTE: If you are printing with the V4 driver and from Adobe Acrobat, the page size and orientation are determined by the application.

NOTE: If your application offers no **Page Setup** dialog, use the **Print** dialog.

- **Using the front panel:** tap ⚙, then **Default printing configuration** > **Paper options** > **Paper size**.

NOTE: If the paper size is set from your computer, it overrides the paper size setting in the front panel.

Custom paper sizes

If you want to choose a paper size that is not included in the list of standard paper sizes, there are various different ways to specify it.

Use the Windows printer driver (version 3)

The following steps provide the complete procedure for this topic.

1. Click the **Paper/Quality** tab.
2. Click **Custom**.
3. Enter the name and dimensions of your new paper size.

4. Click **OK**. The new paper size is automatically selected.

Use the Windows printer driver (version 4)

The following steps provide the complete procedure for this topic.

1. Click the **Paper** tab.
2. Click **Document size**.
3. Enter the dimensions of your new paper size into the two fields in the custom area.
4. Click the arrow button.

Use Windows forms

The following steps provide the complete procedure for this topic.

A custom paper size created with the printer driver has the following characteristics:

- The paper size is permanent. It will not disappear if the driver is closed or the computer is turned off.
- The paper size is local to the printer queue. It will not be seen from other printer queues in the same computer.
- In Domain server networks, the paper size is local to the computer. It will not be seen from other computers sharing the printer queue.
- In Workgroup networks, the paper size will be shared among all the computers sharing the printer queue.
- If the printer queue is deleted, the paper size is deleted with it.

1. From the Start menu, or from the Control Panel, select **Printers and Faxes**.
2. From the **File** menu, select **Server Properties**.
3. In the **Forms** tab, check the **Create a new form** box.
4. Enter the name and dimensions of your new paper size. Leave the margins as 0.00.
5. Click the **Save Form** button.
6. Go to the printer driver, and select the **Paper/Quality** or **Paper** tab (depending on the driver version).
7. Select **More...** from the drop-down list of paper sizes.
8. Select your new paper size from the group of Custom sizes.

A custom paper size created with Windows forms has the following characteristics:

- The paper size is permanent. It will not disappear if the driver is closed or the computer is turned off.
- Restricted users cannot create paper forms. The “manage documents” role in the Windows Active Directory is the minimum required.
- The paper size is local to the computer. It will be seen in all the printer queues that have been created on the computer and that support paper of that size.
- If a printer queue is shared, this paper size will appear in all the client computers.

- If a printer queue is shared from another computer, this paper size will **not** appear on the driver´s document size list. A Windows form in a shared queue needs to be created in the server.
- If the printer queue is deleted, the paper size is not deleted.

Select margin options

By default, the printer leaves a 3 mm margin between the edges of your image and the edges of the paper (increased to 17 mm at the foot of cut-sheet paper). However, you can change this behavior in several ways.

Choose between 3 and 5 mm margins

- **In the Windows V3 driver dialog:** Select the **Advanced** tab, then click **Advanced features** > **Document options** > **Printer features** > **Margin**, and select the margin size.
- **In the Windows V4 driver dialog:** Select the **Layout** tab and select your margins from the **With Margins** list.
- **Using the front panel:** Tap ⚙, then **Default Printing Configuration** > **Margins**.

Choose margin layout options

- **In the Windows V3 driver dialog:** Select the **Paper/Quality** tab, and click the Margins/Cutter **Settings** button. The **Layout and Margins** window is displayed.
- **In the Windows V4 driver dialog:** Select the **Layout** tab and go to the Layout Mode area.
- **Using the front panel:** Tap ⚙, then **Default printing configuration** > **Margins layout**.

You will then see at least some of the following options.

- **Use application settings** (drivers)/**Use standard** (front panel). Your image will be printed on a page of the size you have selected, with a narrow margin between the edges of the image and the edges of the paper. The image should be small enough to fit between the margins.
- **Oversize**. Your image will be printed on a page slightly larger than the size you have selected. If you cut off the margins, you will be left with a page of the size you selected, with no margins remaining between your image and the edges of the paper.
- **Clip contents by margins**. Your image will be printed on a page of the size you have selected, with a narrow margin between the edges of the image and the edges of the paper. In this case, if the image is the same size as the page, the printer assumes that the extreme edges of the image are either white or unimportant, and do not need to be printed. This may be useful when your image already contains a border.

Print on loaded paper

This topic explains the concepts involved in this subject.

To print a job on whichever paper is loaded in the printer, choose the following Paper Type option in your printer driver:

- **In the Windows driver dialog:** Select the **Paper/Quality** or **Paper** tab (depending on the driver version), then select **Use Printer Settings** in the Paper Type drop-down list.

NOTE: **Use Printer Settings** (Windows).

Rescale a print

This topic explains the concepts involved in this subject.

You can send an image to the printer at a certain size but tell the printer to rescale it to a different size (normally larger). This may be useful:

- If your software does not support large formats
- If your file is too large for the printer's memory—in this case, you can reduce the paper size in your software and then scale it up again using the front-panel option

You can rescale an image in the following ways:

- **In the Windows driver dialog:** Go to the **Layout Output** or **Layout** tab (depending on the driver version) and look at the Resizing Options section.
  - The **Actual size** option leaves the size of the image unchanged.
  - The **Fit to** option adjusts the image size to the paper size you have selected. For example, if you have selected ISO A2 as the paper size and you print an A3-sized image, it is enlarged to fit the A2 paper. If the ISO A4 paper size is selected, the printer reduces a larger image to fit the A4 size.
  - The **% of actual size** or **Scale %** option (depending on the driver version) enlarges the printable area of the original paper size (the page minus the margins) by the percentage indicated, then adds the margins to create the output paper size.
- **Using the front panel:** Tap ⚙, then **Default printing configuration** > **Paper options** > **Resize**.

If you are printing to a single sheet, you must ensure that the image can actually fit onto the sheet, otherwise the image will be clipped.

Change the treatment of overlapping lines

This topic explains the concepts involved in this subject.

NOTE: This topic applies only when printing an HP-GL/2 job.

The merge option controls the overlapping lines in an image. There are two settings:

- **Off**: Where the lines cross, only the color of the top line is printed. This is the default setting.
- **On**: Where the lines cross, the colors of the two lines merge.

To turn merge on, go to the front panel and tap ⚙, then **Default printing configuration** > **HP-GL/2 options** > **Merge**. You can set the merge option from your software in some applications. Settings in your software override the front-panel settings.

Preview a print

Previewing a print on the screen allows you to check the layout of the print before printing, which may help you to avoid wasting paper and ink on a bad print.

- To preview a print under Windows, you have the following options:
  - Use the HP Print Preview application:

    Check the **Show preview before printing** box, which you can find in the right bottom corner of the driver dialog. Click **Print**, then wait a few seconds for the HP Print Preview application to be launched.

    Check that the preview of the job is what you wanted. If so, click **Print**, otherwise click **Cancel**; you can readjust the driver settings before trying again.

    NOTE: The **Show preview before printing** box appears in the driver dialog only if HP Print Preview is installed in your computer. See HP Print Preview on page 13.

  - Use your application's print preview option.
- To preview a print under Mac OS X, you have the following options:
  - Use your application's print preview option.
  - A print preview is always shown on the print dialog box for most applications.

Print a draft

This topic explains the concepts involved in this subject.

You can specify fast draft-quality printing in the following ways:

- **In the Windows driver dialog:** Go to the **Paper/Quality** or **Paper** tab (depending on the driver version) and look at the Print Quality section. Move the print-quality slider to the extreme left ('Speed').
- **Using the front panel:** Tap , then **Default printing configuration** > **Print quality** > **Select quality level** > **Fast**.

You can specify even faster draft-quality printing by using Economode, as follows. This is intended mainly for documents containing only text and line drawings.

- **In the Windows driver dialog:** Go to the **Paper/Quality** or **Paper** tab (depending on the driver version) and look at the Print Quality section. Select **Custom Options** or **Advanced** (depending on the driver version), then set the quality level to **Fast** and check the **Economode** box.
- **Using the front panel:** Tap , then **Default printing configuration** > **Print quality** > **Enable economode**.

NOTE: If the print quality is set from your computer, it overrides the print-quality setting in the front panel.

High-quality printing

The following sections provide details for this topic.

You can specify high-quality printing in the following ways:

- **In the Windows driver dialog:** Go to the **Paper/Quality** or **Paper** tab (depending on the driver version) and look at the Print Quality section. Move the print-quality slider to the extreme right ('Quality').
- **Using the front panel:** Tap ⚙, then **Default printing configuration** > **Quality level** > **Best**.

NOTE: If the print quality is set from your computer, it overrides the print-quality setting in the front panel.

If you have a high-resolution image

If your image has a resolution greater than the rendering resolution (which you can see in the Custom Print Quality Options box under Windows), print sharpness may be improved by selecting the **Maximum detail** option. This option is available only if you are printing on glossy paper and you have selected **Best** print quality.

- **Using the front panel:** Tap ⚙, then **Default printing configuration** > **Print quality** > **Enable maximum detail**.

NOTE: The **Maximum detail** option results in slower printing with photo papers, but it does not increase the amount of ink used.

Print in gray shades

You can convert all colors in your image to shades of gray:

See Printing in grayscale on page 137.

Print with crop lines

Crop lines indicate where the paper should be cut to reduce it to your selected page size. You can print crop lines with individual jobs in the following ways:

- **In the Windows V3 driver dialog:** Select the **Paper/Quality** tab, then click the Margins/Cutter **Settings** button. Check the **Draw cutting lines** box in the **Layout and Margins** window.
- **In the Windows V4 driver dialog:** Select the **Output** tab and check the **Crop lines** box.

Alternatively, you can choose to print crop lines with all jobs by default:

- **Using the front panel:** Tap ⚙, then **Default printing configuration** > **Paper options** > **Enable crop lines** > **On**.

To print crop lines with nested jobs (see Nest jobs to save roll paper on page 84), you must select a different option:

- **Using the front panel:** Tap ⚙, then **Job management** > **Nest options** > **Enable crop lines** > **On**.

Use paper economically

This topic explains the concepts involved in this subject.

Here are some recommendations for making economical use of paper:

- If you are printing relatively small images or document pages, you can use nesting to print them side by side instead of one after another. See Nest jobs to save roll paper on page 84.
- You may be able to save some roll paper by using the following options:
  - **In the Windows driver dialog:**
    - With a version 3 driver: Click the **Paper/Quality** tab, then the Margins/Cutter **Settings** button, then check the box **Remove blank areas**.
    - With a version 4 driver: Click the **Output** tab, then **Roll options**, then check the box **Remove blank areas**.

    You can also select the **Layout/Output** or **Layout** tab (depending on the driver version) and then select one of the **Rotation** options.
- If you check the print preview on your computer before printing, you can sometimes avoid wasting paper on prints containing obvious mistakes. See Preview a print on page 82.

Nest jobs to save roll paper

Nesting means automatically printing images or document pages side by side on the paper, rather than one after the other. This is done to avoid wasting paper.

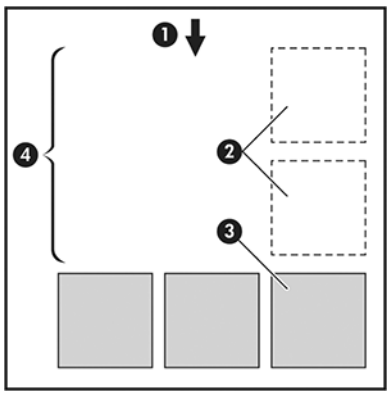

1. Direction of paper flow
2. Nesting off
3. Nesting on
4. Paper saved by nesting

When does the printer try to nest pages?

This topic explains the concepts involved in this subject.

When both of the following are true:

- The printer is loaded with roll paper, not sheet paper.
- The printer's **Nest** option is turned on. See How to turn nesting on and off on page 85.

What pages can be nested?

All pages can be nested, unless they are so large that two of them cannot fit side by side on the roll, or unless there are too many of them to fit into the remaining length of the roll. A single group of nested pages cannot be split between two rolls.

Which pages qualify for nesting?

This topic explains the concepts involved in this subject.

In order to be in the same nest, the individual pages must be compatible in all of the following ways:

- All pages must have the same print quality setting (**Economode**, **Fast**, **Normal** or **Best**).
- The **Maximum Detail** setting must be the same on all pages.
- The **Layout/Margins** setting must be the same for all pages.
- The **Mirror Image** setting must be the same for all pages.
- The **Rendering Intent** must be the same for all pages.
- The **Cutter** setting must be the same for all pages.
- Pages must be all color, or all grayscale: not some in color and some in grayscale.
- All pages must be in one or other of the following two groups (the two groups cannot be mixed in the same nest):
  - PCL3, RTL, TIFF, JPEG
  - PostScript, PDF
- JPEG and TIFF pages with resolutions greater than 300 dpi may not nest with other pages in some cases.

How to turn nesting on and off

To turn nesting on or off, you must first make sure that the start of printing is set to *After Processing*

See Select when to print a job on page 96).

Then go to the front panel and tap ⚙, then **Job management** > **Nest options** > **Nesting**.

You will see the following options:

- **In order**: Pages are nested in the order in which they are sent to the printer (this is the default option). The nested pages are printed as soon as one of three conditions is met:
  - The next page will not fit on the same row as the other pages already nested.
  - No page has been sent to the printer during the specified wait time.
  - The next page is incompatible with the pages already nested (see Nest jobs to save roll paper on page 84).
- **Optimized order**: Pages are not necessarily nested in the order in which they are sent to the printer. When it receives an incompatible page, the printer holds it and waits for compatible pages to complete the nest. The nested pages are printed as soon as one of three conditions is met:

- The next page will not fit on the same row as the other pages already nested.
- No page has been sent to the printer during the specified wait time.
- The incompatible-page queue is full. The printer can queue up to six incompatible pages while nesting compatible pages. If it receives a seventh incompatible page, the nest is printed as it is.

- **Off**: nesting is disabled.

TIP: **Optimized order** uses the minimum amount of paper; however, it may take longer to print because the printer waits for compatible pages to arrive.

How long does the printer wait for another file?

So that the printer can make the best nest possible, it waits after a file has been received to check whether a subsequent page will nest with it or with pages already in the queue. This waiting period is the nest wait time; the factory default nest wait time is 2 minutes. This means that the printer waits for up to 2 minutes after the last file is received before printing the final nest. You can change this waiting time from the printer's front panel: tap ⚙, then **Job management** > **Nest options**, and select the wait time. The available range is 1 to 99 minutes.

While the printer is waiting for nesting to time out, it displays the remaining time on the front panel and in the Embedded Web Server.

Use ink economically

This topic explains the concepts involved in this subject.

Here are some recommendations for making economical use of ink:

- For draft prints, use plain paper and move the print-quality slider to the left end of the scale ('Speed'). For further economy, select custom print quality options, then select **Fast** and **Economode**.
- Clean the printheads only when needed, and clean only those printheads that need cleaning. Cleaning the printheads can be useful, but it uses a small amount of ink.
- Leave the printer permanently turned on so that it can maintain the printheads in good condition automatically. This regular printhead maintenance uses a small amount of ink. However, if it is not done, the printer may need to use much more ink later to restore the health of the printheads.
- Wide prints make more efficient use of ink than narrow prints, because printhead maintenance uses some ink, and its frequency is related to the number of passes made by the printheads. Therefore, nesting jobs can save ink as well as saving paper (see Nest jobs to save roll paper on page 84).

Protect a paper type

You can protect selected paper types to avoid printing on them unintentionally. A protected paper type will be printed on only when the paper type is explicitly specified in the job.

To protect a paper type, tap ⚙, then **Job management** > **Roll policies** > **Paper Type Protection**, then select the category of paper you want to protect.

When a paper type is protected, the 🛡 icon appears before the paper name.

To print on a protected paper category, just select the paper type explicitly when submitting the job from a printer driver or other job submission software.

NOTE: If a protected paper type is not explicitly selected, and no other paper types are available, an out-of-paper message will appear.

Unattended printing/overnight printing

The printer is well suited to long, unattended print jobs, having multiple rolls plus robust and consistent image quality.

Here are some recommendations to help you deal with a long queue of printing jobs.

- If feasible, use brand-new long rolls of paper.
- If you want to print on partly-used rolls, you can check the paper type and the remaining length in the Embedded Web Server or in the front panel, to confirm that you have enough paper to print all your jobs.

NOTE: Information on the remaining length is available only if you told the printer the length of the roll when you loaded it, or if the printer read the length of the roll from the barcode printed on it.

- If you have a T2600dr printer, load two rolls of paper suitable for your jobs. If the printer finishes one roll, it will automatically switch to the other.
- HP recommends the use of papers approved for your printer. See Supplies and accessories on page 188.
- Check that you have paper wide enough to print all of your jobs. Any jobs that are too wide may be put on hold for paper if the paper mismatch action is set to **Put job on hold** (see Solve paper mismatch on page 97).
- Check the ink levels remaining in your ink cartridges.
- When you have submitted your print jobs, you can use the Embedded Web Server from a remote location to monitor their status.
- Drying time should be set to **Optimal**.
- **T2600dr only:** Tap ⚙, then **Job management** > **Roll policies** > **Use most depleted roll** > **On**.

We recommend the following settings, depending on the paper type and what kind of prints you are making.

Table 5-1 Recommended settings for unattended printing

Print type	Print mode	Maximum detail	Drying time	Paper types
Lines	Normal	Off	Optimal	Coated, Bond, Heavyweight Coated, Glossy
Lines and fills	Normal	Off	Optimal	Coated, Bond, Heavyweight Coated, Glossy
Maps	Best	Off	Optimal	Coated, Heavyweight Coated, Glossy
Renderings, photographs	Best	Off	Optimal	Coated, Heavyweight Coated, Glossy

6 Mobile printing

The following sections provide details for this topic.

Introduction

You can print to your printer from many mobile devices and from almost any location. There are two main methods of Mobile Printing:

- Direct printing by connection to the same network
- Printing by e-mail

Your printer can be connected to the Web, providing various benefits:

- Automatic firmware updates (see Update the firmware on page 180)
- Print on HP printers from almost anywhere
- Print on HP printers from almost any device, including smartphones, tablets, and laptops

See http://www.hp.com/go/designjetmobility for more detailed information.

You can enable Web Services when setting up the printer: see Set up printer services on page 20 or the Assembly Instructions for more information.

IMPORTANT: The printer must be connected to a network with Internet access: connect an Ethernet cable. See Connect the printer to your network on page 16.

Print from Android

You must have Android KitKat 4.4 or later.

For Android printing, install and enable the HP Print Service App from Google Play (https://play.google.com/store/apps/details?id=com.hp.android.printservice&hl=en), if it is not already installed in your device.

NOTE: Printing is only available from applications that offer printing or sharing.

1. Open the document or photo you want to print, and press the menu icon, and select **Print**.
2. Choose your printer from the list.
3. Check the print settings, then press **Print**.

Print from Chrome OS

Printing from Chromebook devices is as easy as installing the HP Print for Chrome extension from the Chrome Web Store.

See (https://chrome.google.com/webstore/detail/hp-print-for-chrome/cjanmonomjogheabiocdamfpknlpdehm).

1. Choose your content. Open the document or photo you want to print, tap the **menu icon** and select **Print**.
2. Choose your printer. Select from the list of printers that appears.
3. Confirm that the correct printer and print setting are selected. Tap **Print** and collect your printed documents.

NOTE: Printing is only available from applications that offer printing or sharing.

Print, scan, and share from the HP Smart App

Use the screen on your mobile device to control printer scan and print functions. Send scans directly to your mobile device from your printer. Print PDF, photos, email attachments, and more from virtually anywhere.

You can download the HP Smart App from the following locations:

- Android: https://play.google.com/store/apps/details?id=com.hp.printercontrol
- iOS: https://itunes.apple.com/app/id469284907

Make sure your device and printer are operating on the same network, and follow the steps below:

iOS and Android printing with the HP Smart App

The following steps provide the complete procedure for this topic.

1. Open the HP Smart App and select your printer.
2. Select whether you want to print documents or photos from your local device, or link your Google Drive, Dropbox, or other accounts to access your content.
3. Use the edit options to adjust quality, color, and other settings if you wish to make such adjustments.
4. Tap **Print** and collect your printed documents.

iOS and Android scanning and sharing with the HP Smart App

The following steps provide the complete procedure for this topic.

1. Load the paper to be scanned to. Place the document that you want to scan on the printer.
2. Open the HP Smart App and trigger scanning from it. You can either store the document in your mobile device, send it by email, or upload it directly to your preferred cloud repository.

Print by email (HP ePrint)

If you can email it, you can print it. Simply attach a PDF or other print-ready file to an email message, and send it to your printer's dedicated address.

IMPORTANT: To enable email printing, see Enable email printing with HP ePrint on page 21.

You can print from anywhere with an Internet connection, with no need for a printer driver, but there are a few limitations to bear in mind:

- The attached files to be printed must be in PDF format.
- The maximum file size is 10 MB, but your email server may have a lower limit.
- Files are printed in the original document size (at 100% scale), in normal quality, in color, and normally in portrait orientation (some printers may offer autorotation).

For more information, see https://www.hpconnected.com.

Mobile specifications

This topic explains the concepts involved in this subject.

- Mobile devices must have an Internet connection and email capability.
- Print, scan, and copy control requires the mobile device and printer to be on the same network.
- Printing by email also requires the printer to be connected to the Internet.
- iOS 7.0 and above, or Android KitKat4.4 and above, is required.

7 Job queue management

The following sections provide details for this topic.

Job queue in the front panel

Tap on the home screen to view the job queue(s) on the front panel.

You can choose **Print & Copy queue** or **Scan queue** from the tabs at the left of the screen. The job queue page shows all jobs that are available in the selected job queue.

Print & Copy queue

The Print & Copy queue(s) includes jobs that are in different phases: being received, parsed, rendered, printed, already printed, and so on.

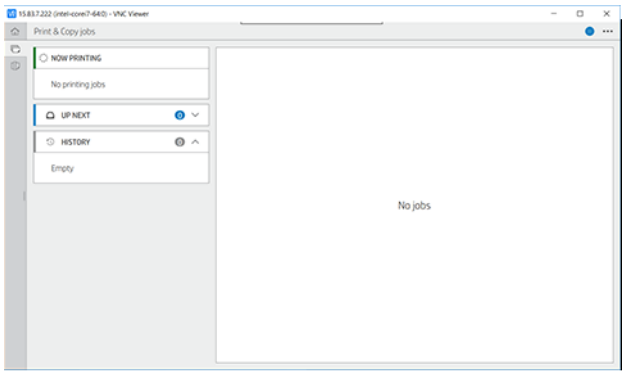

Tap the name of the job to see all the job details, including information about status and preview. The details displayed depend of the type of job.

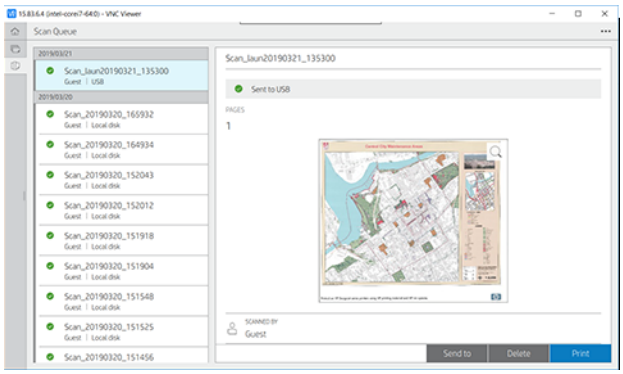

In an active queue, the job you are printing appears in the middle of the queue, with printed jobs below and jobs to be printed above. You can scroll up and down. Once scrolled, the queue remains static and does not move automatically.

Jobs in the left pane are divided into four categories (Up next, Now printing, On hold, and History) in chronological order starting from the top. On hold is shown only when there are one or more jobs on hold. Below the job name, you can see its status:

Up next

- **Waiting to process**: The job has been received by the printer and is waiting to be rendered.
- **Processing**: The printer is parsing and rendering the job.

- **Waiting to print** or **Paused**: The job is processed and waiting for the print engine to be ready to proceed with printing.

Now printing

The job is being printed.

- **Paused**: The job is paused.

NOTE: Sometimes, while printing, you may see a **Self-servicing** status, which means that the printer is performing some task such as paper type change or print mode change between pages of the same job.

On hold

The job will not be printed until you take some action. You should respond in one of the following ways:

- **On hold: Private job**: Enter the PIN required to print the job. The job will be deleted from the queue after printing.
- **Oh hold: Personal job**: The job is not automatically printed: you must select it from the queue. No details can be seen.
- **On hold to preview**: The job is not automatically printed: you must select it from the queue.
- **On hold for paper mismatch**: Load the paper required by the job.
- **On hold for accounting**: Enter an account ID to be used for the job.
- **On hold: Recovered job**: After a printer recovery, some jobs that were not printed are kept on hold.

History

- **Printed**: In chronological order, divided into today, yesterday, last week, and so on.
- **Canceled**: Canceled by the user.
- **Failed**: The job has failed for one or more reasons.

Scan queue

The scan queue structure is similar to the Print & Copy queue, but with the files organized by date. The main details (selected destination and its respective status) are in the left panel, below each job.

In the right pane, detailed information appears after scrolling:

- Scanned by
- Date and time
- File type
- File Size (if there are several sizes, value will be **several**)
- Content type
- Size

- Color mode
- Resolution
- Destination

Scan queue actions

Some job queue actions are determined by the settings selected. Depending on the environment, it may be worthwhile to change some default settings; to do so, tap ⚙ in the home screen, then **Job Management** . Alternatively, in the job queue, tap ···at the top right, then **Settings**.

Print

In the left panel, tap the job to print, then on the **details screen** select **Print**. On the following screen, select the number of copies, choose a quickset, and edit the printing preferences. When you press **Print**, there is an option to manage the job in the job queue.

Delete

To delete a job manually, select the job and tap **Delete**.

Cancel Sending

The transfer of a file can be canceled if it is in the status: **waiting to be sent** or **sending**.

Send to

Available only if the file has already been sent or failed. When you tap **Sent to** options appear:

- **To Network folder**: possible only if a network folder is configured. See Configure a network folder on page 24
- **To email**: see Configure the email server on page 28
- **USB drive**: see Scanning and copying on page 103

Scan queue options

Delete all scan jobs

To delete the whole job queue: tap ···, then **Delete all jobs**.

Manage remotely

A QR code is displayed. To access the scanned files in the EWS, scan the QR code or enter the URL shown.

Tap ··· at the top of the screen, then **manage remotely**. See Scan queue in the Embedded Web Server or HP DesignJet Utility on page 102.

NOTE: The device used to connect to this link must be on the same network as the printer.

Job queue actions

Some of the actions in the job queue are determined by the settings selected. Some default settings may be worth changing, depending on your environment. To do so, tap ⚙ in the home screen, then **Job management** . Alternatively, in the job queue app, tap ··· at the top right, then **Settings**.

Pause the job queue

You can pause the job queue by tapping ⏸ and resume by tapping ▶. The pause takes effect at the end of the page that is currently printing.

Reprint

In the History section, tap the job you want to reprint. On the details screen, tap **Reprint**. On the next screen, you can select the number of copies, the source, and the destination.

Print next

If you want to change the position of a job in the queue to be printed immediately after the currently printing job, select the desired job and tap the **Print next** button.

Enable Print Now

Enabling **Print Now** allows you to interrupt another printing job and print the selected job immediately.

Select when to print a job

This topic explains the concepts involved in this subject.

NOTE: The When To Start Printing options cannot be used with PostScript jobs.

You can select at what point you want to print a job in the queue. Tap ⚙, then **Job management** > **When to start printing**.

There are three options you can select:

- When **After Processing** is selected, the printer waits until the whole page has been processed and then it starts to print. This is the slowest setting but ensures the best print quality in large or complex prints.
- When **Immediately** is selected, the printer prints the page as it is processed. This is the quickest setting, but the printer may stop halfway through a print to process data. This setting is not recommended for complex images with dense color.
- When **Optimized** is selected (this is the default setting), the printer calculates the best time to begin printing the page. It is usually the best compromise between the **After Processing** and **Immediately** settings.

See job details

Tap the name of the job to show its details, including information about status, pages, copies, total, and preview. Scroll down as necessary to see all of the information.

By tapping the thumbnail, you can navigate over all pages of the job. From there you can zoom in and out (pinch and zoom) and see more information about each page.

In an active queue, the job you are printing appears in the middle of the queue, with printed jobs below and jobs to be printed above.

Roll policies

At the front panel, tap , then ···, then , then **Roll policies**.

Alternatively, tap , then **Job management** > **Roll policies**.

The following options are available:

- **Increase productivity**: To increase the productivity of the printer.
  - **Job autorotation**: The printer can rotate a job automatically in order to save paper.
- **Automatic roll selection**:
  - **Roll width selection**: The printer can be more or less restrictive when selecting the roll width on which to print. You can select:
    - **Print on the same width only**: Each page prints on a roll with the same page width.
    - **Print on the same width or wider**: Each page prints on a roll with the same width or wider.
  - **Use most depleted roll**: When there are two with the same paper type and width, the roll selected is the roll with less paper.
- **Paper type protection**: You can avoid printing accidentally on special paper types by protecting them. Protected types are eligible for printing only when paper type or roll are specified in the job.

See also Protect a paper type on page 86.

Solve paper mismatch

If the paper currently loaded in the printer is not suitable for a particular job or page, the printer can automatically solve the conflict or give a number of choices depending on the printer policies. Such a conflict may be caused by a job sent to the printer with no specific roll or paper type assigned to it, or by a roll coming to its end during printing. The following options are available in the paper mismatch settings menu; you can reach this menu from the job queue by tapping ···, then , then **Mismatch actions** > **Paper mismatch** ; or by tapping , then **Job management** > **Mismatch actions** > **Paper mismatch**.

- **Pause and ask** (the most restrictive option): Printing stops until the correct paper is loaded. This option is recommended when the printer is attended. A message appears, asking what you want to do: cancel the job, print anyway, put on hold, or load paper. These options are also available in the job queue.
- **Hold job and continue with next**: Put mismatched jobs on hold until the correct paper is loaded, and continue printing the rest of the job queue. The printer sends an alert whenever a job is put on hold. This option is recommended when the printer is unattended, even though the integrity of a job may be disrupted, to avoid stopping the queue. Once the paper required for the job is loaded, the job or pages are automatically resumed.
- **Print anyway** (the least restrictive option): Print on whatever paper is loaded. The printer will choose the roll to print according to the following criteria: first where the page fits and then the same paper type. This option will never select a paper type that has been protected.

Job queue options

To change the job queue options, tap , then **Job management**> **Job queue**. Alternatively go to , then ···, then **Settings** > **Job queue**.

You can select the maximum number of printed jobs to have in the queue, when to delete printed jobs, and whether to delete jobs on hold after a specified time.

Default printing preferences

At the front panel, tap , then **Default Printing configuration** to define the default properties of jobs sent to your printer from remote locations.

You can define settings in the following areas: Print quality, Color, Paper, Margins, PostScript, Print retrieval.

Job deletion

If the printer runs out of storage space for new jobs, the oldest printed jobs are automatically deleted from the queue.

You can request that printed jobs should be automatically deleted from the queue when the total number of printed jobs exceeds a specified limit (the maximum number in the history setting), or when the jobs were printed more than a specified time ago (clear history settings).

To delete jobs on hold, the setting **Delete jobs on hold** allows you to define the time after which these jobs will be removed (2–48 h).

To delete a job manually, select the job and tap **Delete** on the bottom right.

The **Delete** option deletes the job from the queue, while the **Cancel** option cancels the job but leaves it in the queue, marked as **Canceled by the user** in the history category.

To cancel a job while printing, tap **X**. To cancel a job from the Up Next category, tap the job name on the list and then tap **Cancel job** on the bottom right.

NOTE: If you tap **X**, you cancel the currently printing job only.

Print job queue in the Embedded Web Server or HP DesignJet Utility

The HP DesignJet Utility provides a different way of accessing the Embedded Web Server's job management facilities, but the facilities are exactly the same whether you use the Embedded Web Server or the HP DesignJet Utility.

To see the queue in the Embedded Web Server, select **Job queue** in the **Main** menu.

Printing

The following sections provide details for this topic.

Job queue page

By default, access to the job queue is open to all users. An administrator can set a password so that users are required to enter a password to access the page.

The job queue page shows all jobs that are available in the queue. The queue includes jobs that are being received, parsed, rendered, printed and already printed.

The Embedded Web Server displays the following information for each print job:

- **File name**: The name of the job.
- **Status**: The current status of the job.
- **Pages**: The number of pages in the job.
- **Copies**: The number of copies printed.
- **Total**: The total number of pages (including copies).
- **Sent by**: The username.
- **Account ID**: The account ID for the job.
- **Date**: The date and time attached to the job that was received by the printer, shown in the locale of the Embedded Web Server.
- **File source**: The application from which the job was sent to print.
- **Paper destination**: The output option selected for the printed job.

You can perform the following operations on one or all jobs in the queue:

- **Cancel**: Cancels the selected jobs. You are asked to confirm before the job is canceled. The job remains stored in the printer, but will not be printed unless you click **Reprint**.
- **Hold**: Holds the select jobs until you click **Continue** to print.
- **Resume**: All selected jobs, which are on hold, continue printing.
- **Reprint**: Prints more copies of a job.
- **Next print**: Sends all selected jobs to the top of the job queue.
- **Print anyway**: The printer will try to print the job even if there is some problem with it.

- **Delete**: Deletes selected jobs from the job queue. You are asked to confirm before the job is deleted.

Prioritize a job in the queue

You can select any job in the queue and make it the next one to be printed. After selecting the job, click **Move to front**.

If nesting is turned on, the prioritized job may still be nested with others. If you really want this job to be printed next, and not nested with others, first turn nesting off in the front panel and then move it to the front of the queue.

In the following cases, the **Next print** button is not displayed:

- The job is already at the front of the queue.
- The job is on hold—in this case the **Resume printing** button is displayed instead.
- The job has finished—in this case the **Reprint** button is displayed instead.
- The job has some error condition.

Delete a job from the queue

Under normal circumstances, there is no need to delete a job from the queue after printing it, as it will just fall off the end of the queue as more files are sent. However, if you have sent a file in error, and want to avoid printing it, you can simply select the job and then click **Delete**.

In the same way, you can delete a job that has not been printed yet.

If the job is currently being printed (its status is **printing**), you can click **Cancel** and then **Delete**.

Reprint a job in the queue

To reprint an already-printed job, select the job from the queue, then click **Reprint**. When reprinting a print job, you cannot change the print settings, because the job has already been rasterized.

Job status messages

The following sections provide details for this topic.

These are the possible job status messages, approximately in the order in which they may be seen:

- **Downloading**: The printer is receiving the job from the computer.
- **Processing**: The printer is parsing and rendering the job.
- **Waiting to print**: The job is waiting for the print engine to become free to proceed with printing.
- **Nested**: The printer is set up with Nesting=On and is waiting for other jobs in order to complete the nest and proceed with printing.
- **Preparing to print**: The printer is performing writing system checks before printing the job.
- **On hold for preview**: The job was sent with the **on hold for preview** option.

NOTE: If the printer hangs up while printing a job, and the queue facility is turned on, the partially printed job will appear in the queue as **on hold** when the printer is next turned on. When you resume the job, it will start printing at the page at which it was interrupted.

- **On hold for paper**: The job cannot be printed because the right paper is not loaded in the printer. Load the required paper, see Paper handling on page 36, and click **Continue** to resume the job.
- **On hold for accounting**: The job cannot be printed because the printer requires all jobs to have an account ID: enter the account ID and then click **Continue** to resume the job.

TIP: To set an account ID, see Require account ID on page 31.

- **Printing**
- **Drying**
- **Cutting paper**
- **Ejecting page**
- **Canceling**: The job is being canceled, but will remain in the printer job queue.
- **Deleting**: The job is being deleted from the printer.
- **Printed**
- **Canceled**: The job has been canceled by the printer.
- **Canceled by user**
- **Empty job**: The job does not contain anything to print.

Reactivate a job on hold

When the printer puts a job on hold you receive an alert.

See Alerts on page 232, which explains why the job is on hold. Follow the instructions on the screen to remove the hold and continue printing.

Scan queue in the Embedded Web Server or HP DesignJet Utility

To see the queue in the Embedded Web Server, tap **Job queue** > **Scan queue**.

By default, access to the job queue is open to all users. The administrator can set a password for users to access the page.

The Embedded Web Server displays the following information for each job:

- File name: name of the job.
- Status: current status of the job.
- Pages: number of pages in the job.
- Date: date and time attached to the job that was scanned.
- Destination: storage location.

You can perform the following operations on one or all jobs in the queue:

- Delete all: deletes all jobs from the job queue from the top of the window. You are asked to confirm before the job is deleted.
- Delete: press the button at the bottom of the window to delete selected jobs from the job queue. You are asked to confirm before the job is deleted.
- Download: the selected job can be download and saved to your local disk.
- Tap preview to see the job in full-screen. If the job is multi-page, select the page you want to preview.

Manage scanned files remotely

During the scan process you can request a QR code to manage your job remotely. Scan the QR code with your mobile phone to access your printer's embedded web server remotely, and select the job to manage from the job queue.

NOTE: Your device must be on the same network as the printer.

8 Scanning and copying

The following sections provide details for this topic.

Quicksets

Scanning and copying use quicksets. A quickset is a named group of settings with default values defined, which helps you to be more efficient and is convenient for inexpert users.

Factory quicksets

The printer includes factory-defined quicksets designed for common workflows. Quicksets can be used for scan, copy, and print jobs.

For Scan to HP Build Workspace, use the Optimized for Vectorization quickset.

User quicksets

Depending on the permissions set in your printer, you can create, delete, reorder, or change a quickset. To do these things, tap **Print, Scan & Copy quicksets** in the settings application, or tap **Manage quicksets** from the scan, copy, or print workflow.

Your own quicksets can be duplicated, edited temporarily or permanently, and deleted. Factory quicksets can only be duplicated.

You can reorder the quicksets from **Manage quicksets**. Tap an entire quickset and drag it to the desired position. The **Last settings** quickset is always shown first.

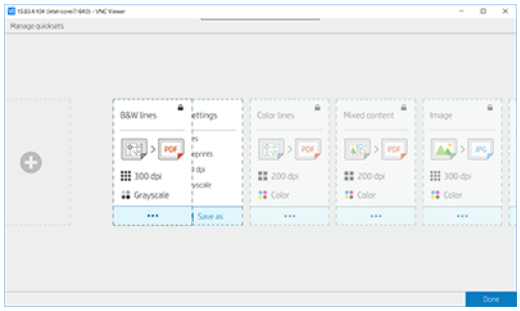

Scanning

This section outlines the steps required to scan.

NOTE: Scan to AI Vectorize and HP Build Workspace is only available in T2600 **Plus Edition** models.

1. Tap .

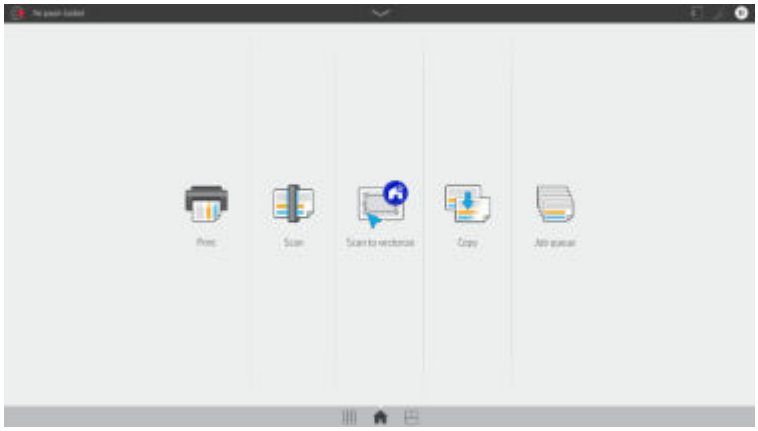

2. Select an appropriate quickset for your scan job. Any quickset can be modified by tapping . You can select the file format, single or multiple pages, and change the default filename.

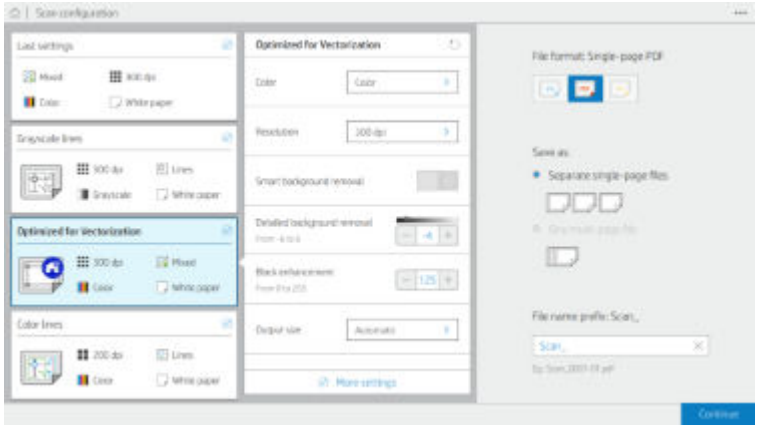

To change a quickset permanently, tap ···, then **Manage quicksets**.

3. Select the scan destination.

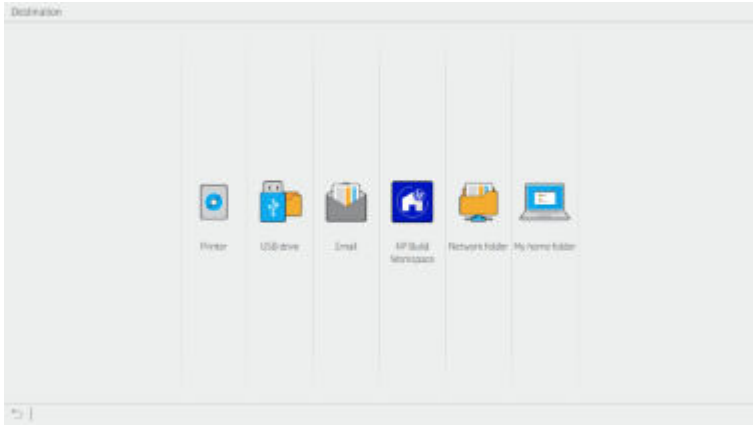

- Scan to printer
- Scan to USB flash drive

- Scan to email (if an email server has been configured). See Configure the email server on page 28. You can also configure an address book. See LDAP Configure the email address book on page 22

- Scan to HP Build Workspace. This option sends the scanned file to HP Build Workspace without vectorizing it. For a single-step workflow that scans and vectorizes the file automatically, and for details on how to sign in to HP Build Workspace, see Scanning to AI Vectorize on page 110.

NOTE: This feature is only available in T2600 Plus Edition models.

- Scan to network folder (if a network folder has been added). See Configure a network folder on page 24

- Scan to **My Home Folder**

NOTE: You need to configure the **LDAP – sign-in server** or **Windows sign-in configuration** to be able to scan to **My Home Folder**. See LDAP – sign-in server on page 29 or Windows sign-in configuration on page 30.

4. Insert the original, facing upwards. The front panel will display the **live** preview of the page. You can stop the process by pressing the **Stop scan** button.

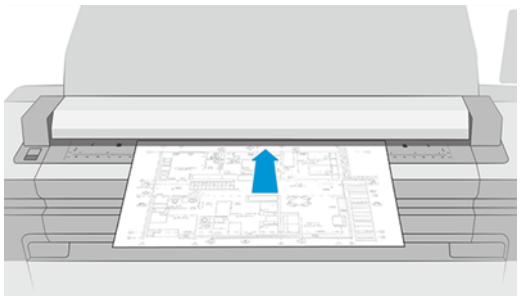

5. Pick up the original when the scanner releases it.

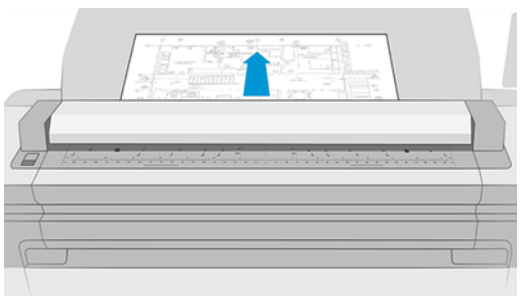

TIP: To release the page, you can select automatic release in the quickset settings, or keep the original on hold until you tap at the top of the page, or insert a new original.

6. One of the most useful options is the one to scan a multipage or single-page document.

   - Multipage: The result will be a single file containing all the scanned pages.

     When scanning a multipage document, insert the next page when prompted. The panel on the right side of the screen displays **Insert New Page**.

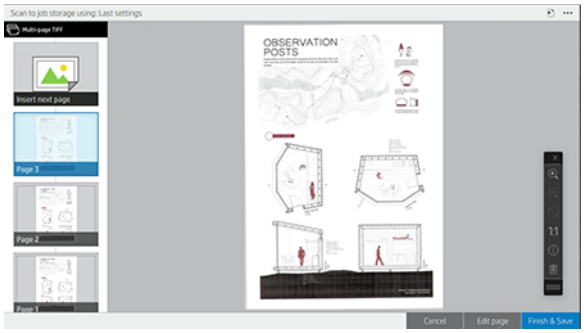

- Single-page: The result will be a single-page file for each scanned page.

  When scanning a single page, the document is automatically saved. If you insert another page, a new document is created.

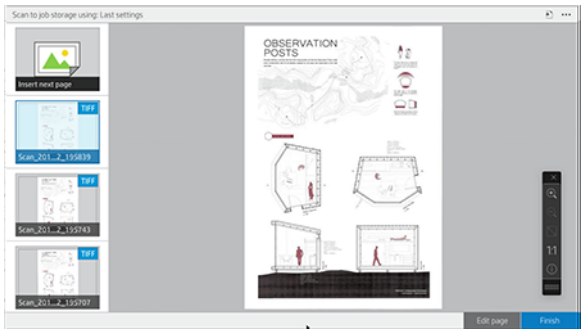

NOTE: By tapping ··· you can show or hide the toolbar, show or hide the background removal setting, and change the scan settings for the following pages. Change the settings as you like and they will be applied to the next page scanned.

NOTE: With the toolbar buttons you can zoom in and out, and see scanner information about the selected page. In a multipage document, you can delete a page. You can also choose the predefined zoom modes **fit to screen**, **original document size**, or **pinch to zoom**.

NOTE: You can edit the scanned page with **Edit page**.

7. Exit the scan by tapping **Finish** for single-page documents, or **Finish & Save** for multipage documents.

8. Tap **New scan** to scan again with the same settings. Tap **Job queue** to see the status of the scanned jobs. With **USB viewer** (only when scanning to USB) you can go to the USB flash drive to confirm that the job is there and preview it. See Scan queue on page 94 for how manage the scan jobs.

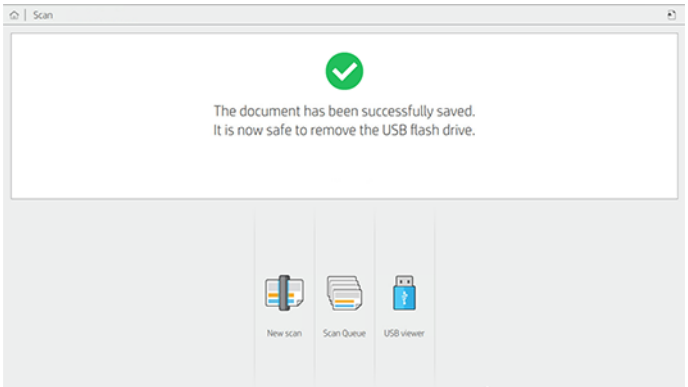

The following settings are available in scan quicksets:

- **Quickset name** allows you to name the quickset you are working with.
- **Content type** allows you to set the content type to **Lines**, **Mixed**, or **Image**.
- **Original paper type** allows you to set the content type to **White paper**, **Photo paper**, **Old/recycled paper**, **Translucent paper**, **Blueprint**, or **Ammonia/old blueprint**.
- **Blueprints invert** allows you to invert blueprints.
- **Auto-release original** allows you to auto-release the page once scanned.
- **Output size** allows you to set the output size page to **Automatic**, **Custom size**, a list of the available loaded rolls (**Roll width**), or a fixed list of standard sizes, by width and length (**Standard size**).

  If you select **Custom size**, two new settings are displayed:

  – **Custom width** allows you to set a specific scan area width, or enter 0 (zero) for automatic width detection.

  – **Custom length** allows you to set a specific scan area length, of enter 0 (zero) for automatic length detection.
- **Orientation** allows you to set the page orientation to **Landscape** or **Portrait** when **Input size** is set to **Custom size**, or any **Standard size** except A0.
- **Positioning** allows you to set the position of the original page in the input size area, when input size is not automatic. The options are **Top-left**, **Top-center**, **Top-right**, **Middle-left**, **Middle-center**, **Middle-right**, **Bottom-left**, **Bottom-center**, **Bottom-right**.

  For example, if you are scanning an A1 original and the input size is smaller (such as A2), top-left positioning crops the original page from the top left corner.

  If you are scanning an A2 original and the input size is larger (for instance A1), top-left positioning places the original image in the top-left corner and adds white margins on the right and bottom to create an A1 image.
- **Scan resolution** allows you to set the resolution to 200, 300, 600, or 1200 dpi.
- **Color options** allows you to choose **Black and white**, **Grayscale**, or **Color**.

- **Smart & detailed background removal** may be used if you have an original with a background that is not completely white, or an original on translucent paper.

  Smart background removal analyses the content of the scanned original and automatically removes the background to make it pure white without removing the contents (lines and areas). Smart removal is available only for Lines and Mixed images (content type) in Grayscale (color option). After the scan process the main window is displayed, go to ···and select **Background removal**.

  Detailed background removal allows you to fine-tune the result of the smart background removal when it is on, or to set a manual level of background removal when smart removal is off, for any type of original. You can define these values on a scale of darker to lighter measured in values from −6 to +6. The default value of both options is zero.

  For example, if you are copying an original blueprint (lines with the blue background) and the result of the smart background removal shows some background noise, you can increase the detailed background removal (for instance, to +3) in order to remove the background and make it whiter. Keep in mind that the smart background removal is analyzing each page; so, if you have pages with different backgrounds, it automatically sets a different removal value for each page.

  NOTE: For better results, most original paper types should be inserted with their contents (lines, area fields, title box) in the first 8.4 cm length of the scanned area.

  The ammonia/old blueprint paper type can be inserted from any side because background removal uses a smart algorithm optimized for originals with a non-uniform or noisy background.

- **Black enhancement** can be used to change dark grays to black.

  For example, if you are copying a brochure with a mixture of text and pictures, the text is often digitized to a color that we may see as black but is really a dark gray. When the printer receives this gray text, it may be printed with a halftone pattern, meaning scattered dots instead of solid black.

  By increasing the black enhancement value, you can force the text to be copied in real black, and it will therefore appear clearer. Use the black enhancement option with caution, because it can change other dark colors (not only grays) into black, making small dark spots appear in the picture.

Both black enhancement and background removal function as cutoff values in which pixels under or over a certain value are affected by the setting. You define these values on a scale of low to high lightness measured in values from 0 to 255 for the black enhancement and from −6 to +6 for the detailed background removal.

For example, you have copied an original and want to improve it by making the text blacker and the background whiter. Adjust the black enhancement value upwards from its default of zero (to 25, for example) and increase the detailed background removal (to 6, for example), making pixels with low lightness values go to black and lighter background pixels go to white.

- **De-skew** allows you to turn the digital skew correction on or off.
- **Reduce scan speed to enhance quality** allows you to reduce the scan speed to get better scan results when scanning at 200 and 300 dpi.
- **Format** allows you to set the file format to **Single-page PDF**, **Multi-page PDF**, **JPG**, **Single-page TIFF**, **Multi-page TIFF**, or **PDF/A**.

NOTE: PDF file output is available only with the appropriate license. If you have the license, enable the setting in the front panel: , then **Scanner preferences** > **PDF/A**.

- **Compression** allows you to set the level of compression.
- **File name prefix** allows you to set the file name prefix for the generated file.
- **Job storage mode** offers two options:
  - **Scan and delete**: Scanned files are not saved in the scan queue.
  - **Scan and store**: Scanned files are saved in the scan queue.

Scanning to AI Vectorize

This section outlines the steps required to scan a document, vectorize the drawing, and store the result in HP Build Worskspace.

NOTE: This feature is only available in T2600 **Plus Edition** models.

Follow these steps to scan and vectorize a document with HP Build Workspace:

1. Tap the Scan to vectorize icon in the front panel's home screen:

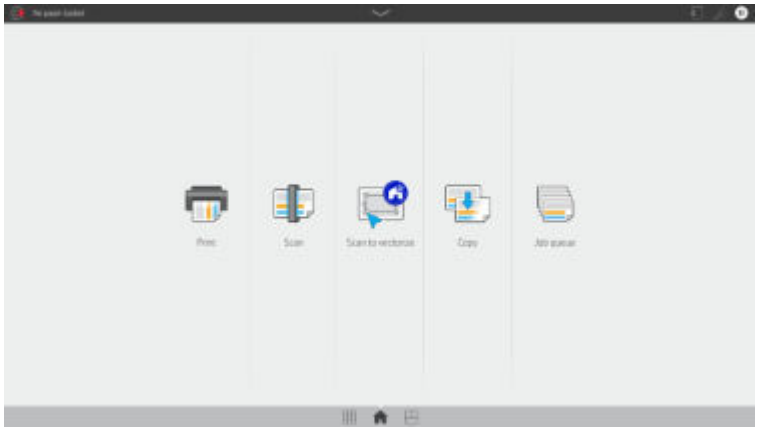

2. Follow the control panel instruction to sign in to HP Build Workspace in a web browser, by scanning the QR code with a mobile device or in a desktop browser by visiting https://build.hp.com/scan.

3. Once you are signed in, the printer's front panel will display the scanning instructions. Insert the original document facing upwards into the scanner. The front panel will display the **live** preview of the document.

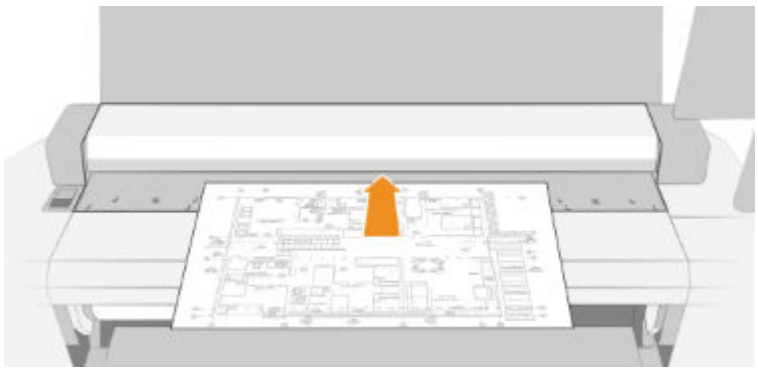

NOTE: You can stop the process by pressing the **Stop Scan** button.

4. Retrieve the original document when the scanner releases it.

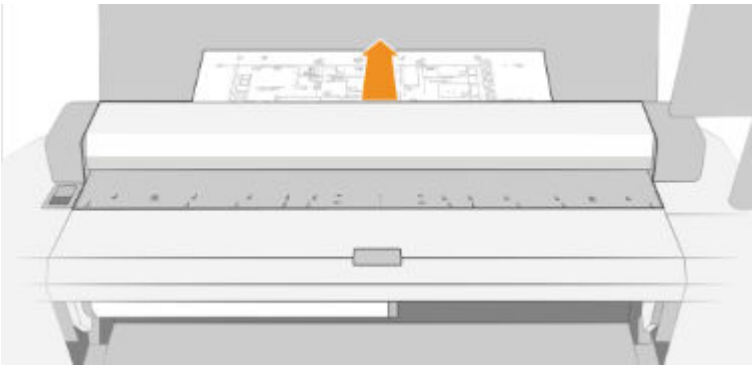

5. For single page documents, finish the scanning process by tapping **Vectorize**. For multipage documents tap **Insert next page**. Once all pages have been scanned tap **Vectorize**.

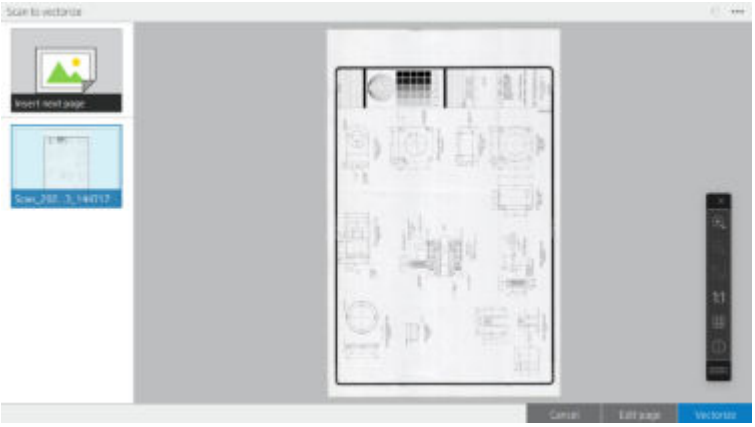

6. Scanned file is sent to HP Build Worskpace and the vectorization process start automatically. You will receive a confirmation e-mail message.

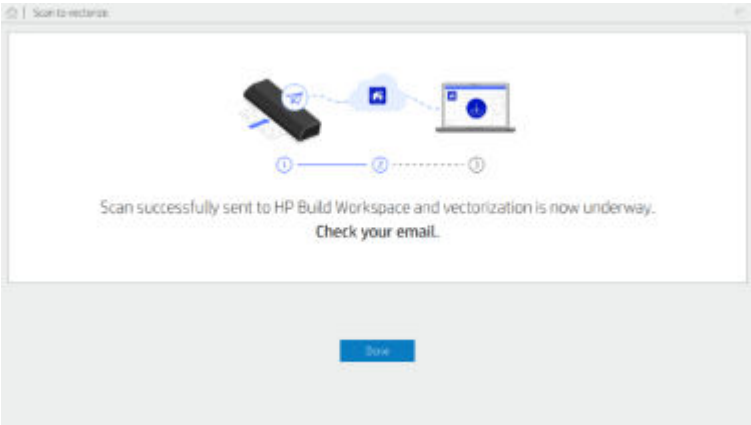

7. Once the vectorization is complete, the vectorized CAD file (.dxf) will be available in the **AI Vectorizations** section in your HP Build Workspace.

NOTE: Vectorization allows you to convert scans into fully editable files. To download a vectorized file, the service uses tokens. One token is required per download.

If you own an HP DesignJet T2600 MFP Plus Edition, you are eligible to receive 20 vectorization tokens per month for one year at no additional cost. To redeem them, go to HP Build Workspace and enter your printer's serial number in **Tokens** > **Redeem now**.

Additional tokens are available if you need more downloads.

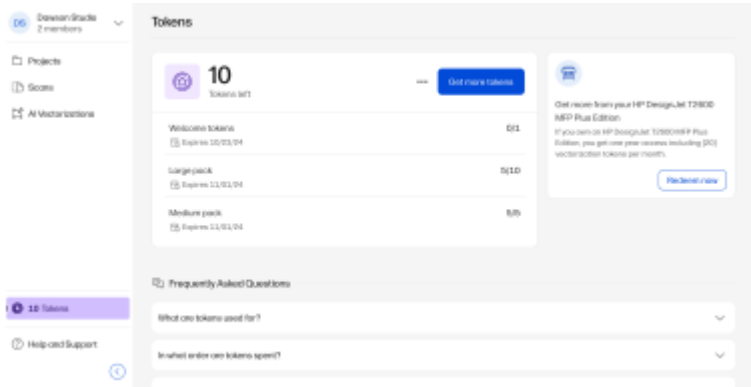

Copying

This section otulines the procedure to copy documents.

NOTE: Scan to AI Vectorize is only available in T2600 **Plus Edition** models.

1. Tap .

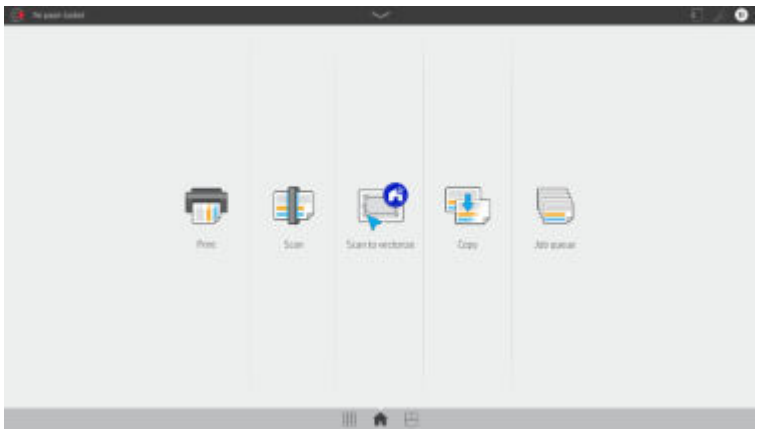

2. Select an appropriate quickset for your copy job. Any quickset can be modified by tapping .

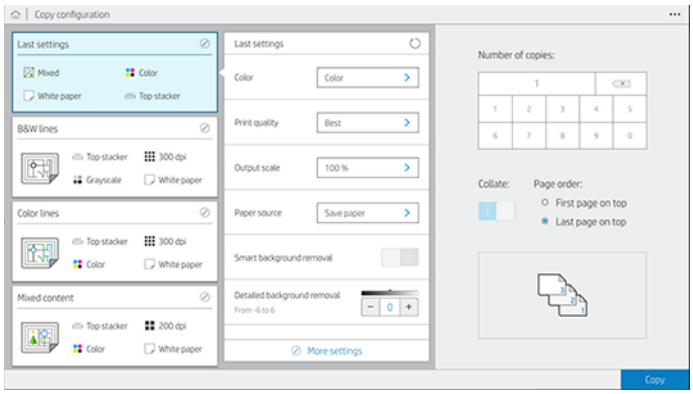

3. You can select the number of copies, the page order (first or last page on top), and whether you want collation.

   The right-hand side of the screen shows a representation of how the job will be printed (depending on the number of copies, collation, order, and the output device).

4. You can change the copy mode by tapping ···, then **Choose copy mode**.

   The copy mode allows you to choose between two ways of printing copy jobs:

   - **Send copy job directly to print queue while scanning**
     - Print the copy job while scanning the pages (depends on output destination and printing preferences).
     - The copy job takes priority over other jobs in the queue.
     - The option of deleting pages of the copy job is not available.
     - The input length is always automatic: you cannot set a manual value.
     - If you want to print an urgent job interrupting the job currently being printed, select **Allow copy to interrupt current print job**.

   NOTE: When the page order selected does not match the order needed for the output device, or when collation is activated, the job is sent to the job queue when you tap **Finish and Print**.

   - **Scan all pages, then send to print queue**
     - Print the copy job after scanning all pages.
     - The job queue continues printing other jobs during the copy job.
     - The option of deleting pages of the copy job is available.

5. Tap **Copy** to continue.

6. Insert the original, facing upwards.

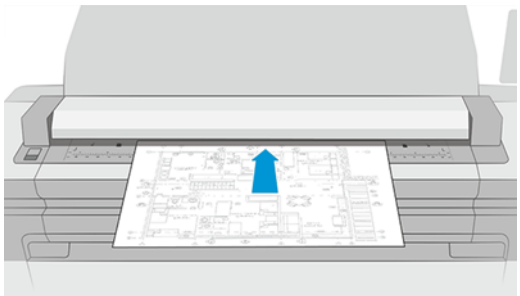

7. In the next screen you can see a preview of each copied page and browse the thumbnails.

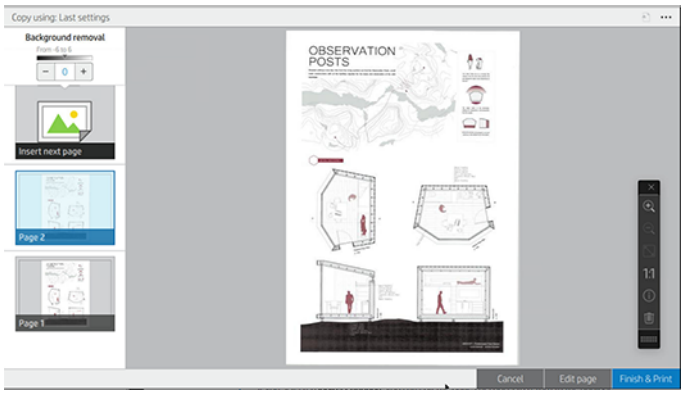

NOTE: By tapping ··· you can show or hide the toolbar, show or hide the background removal setting, and change the copy settings for the following pages. Change the settings as you like and they will be applied to the next page scanned.

NOTE: With the toolbar buttons, you can zoom in and out, and see scanner information about the selected page. You can also choose the predefined zoom modes **fit to screen** or **original document size**. When using the **Scan all pages, then send to print queue** copy mode, you can delete a page.

8. Tap **Finish** when there are no more pages to copy.

If you want to change the main settings of the quicksets before starting the copy, you can tap ··· and then select **Show quickset details panel**.

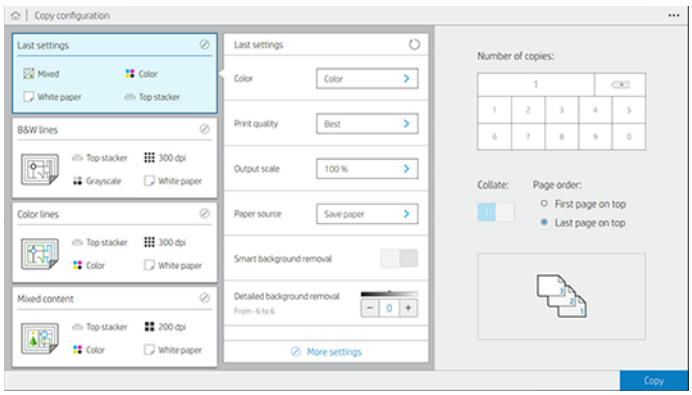

The following settings are available in copy quicksets:

- **Quickset name** allows you to name the quickset you are working with.
- **Content type** allows you to set the content type to **Lines**, **Mixed**, or **Image**.
- **Original paper type** allows you to set the content type to **White paper**, **Photo paper**, **Old/recycled paper**, **Translucent paper**, **Blueprint**, or **Ammonia/old blueprint**.
- **Blueprints invert** allows you to invert blueprints (or not).
- **Auto-release original** allows you to auto-release the page once scanned.
- **Input size** allows you to set the input size page to **Automatic**, **Custom size**, a list of the available loaded rolls (**Roll width**), or a fixed list of standard sizes, by width and length (**Standard size**).

  If you select **Custom size**, two new settings are displayed:

  - **Custom width** allows you to set a specific scan area width, or enter 0 (zero) for automatic width detection.
  - **Custom length** allows you to set a specific scan area length, of enter 0 (zero) for automatic length detection.
- **Orientation** allows you to set the page orientation to **Landscape** or **Portrait** when **Input size** is set to **Custom size**, **Roll width**, or any **Standard size** except A0.
- **Positioning** allows you to set the position of the original page in the input size area, when input size is not automatic. The options are **Top-left**, **Top-center**, **Top-right**, **Middle-left**, **Middle-center**, **Middle-right**, **Bottom-left**, **Bottom-center**, **Bottom-right**.

  For example, if you are scanning an A1 original and the input size is smaller (such as A2), top-left positioning crops the original page from the top left corner.

  If you are scanning an A2 original and the input size is larger (for instance A1), top-left positioning places the original image in the top-left corner and adds white margins on the right and bottom to create an A1 image.
- **Scan resolution** allows you to set the resolution to 200, 300, or 600 dpi.
- **Color options** allows you to choose **Black and white**, **Grayscale**, or **Color**.
- **Smart and detailed background removal** may be used if you have an original with a background that is not completely white, or an original on translucent paper.

  Smart background removal analyses the content of the scanned original and automatically removes the background to make it pure white without removing the contents (lines and areas). Smart removal is available only for Lines and Mixed images (content type) in Grayscale (color option).

Detailed background removal allows you to fine-tune the result of the smart background removal when it is on, or to set a manual level of background removal when smart removal is off, for any type of original. You can define these values on a scale of darker to lighter measured in values from -6 to +6. The default value of both options is zero.

For example, if you are copying an original blueprint (lines with the blue background) and the result of the smart background removal shows some background noise, you can increase the detailed background removal (for instance, to +3) in order to remove the background and make it whiter. Keep in mind that the smart background removal is analyzing each page; so, if you have pages with different backgrounds, it automatically sets a different removal value for each page.

NOTE: For better results, most original paper types should be inserted with their contents (lines, area fields, title box) in the first 8.4 cm length of the scanned area.

The ammonia/old blueprint paper type can be inserted from any side because background removal uses a smart algorithm optimized for originals with a non-uniform or noisy background.

- **Black enhancement** can be used to change dark grays to black.

  For example, if you are copying a brochure with a mixture of text and pictures, the text is often digitized to a color that we may see as black but is really a dark gray. When the printer receives this gray text, it may be printed with a halftone pattern, meaning scattered dots instead of solid black.

  By increasing the black enhancement value, you can force the text to be copied in real black, and it will therefore appear clearer. Use the black enhancement option with caution, because it can change other dark colors (not only grays) into black, making small dark spots appear in the picture.

  Both black enhancement and background removal function as cutoff values in which pixels under or over a certain value are affected by the setting. You define these values on a scale of low to high lightness measured in values from 0 to 225 for the black enhancement and from -6 to +6 for the detailed background removal.

  For example, you have copied an original and want to improve it by making the text blacker and the background whiter. Adjust the black enhancement value upwards from its default of zero (to 25, for example) and increase the detailed background removal (to 6, for example), making pixels with low lightness values go to black and lighter background pixels go to white.

- **Contrast** allows you to set the level of contrast.
- **De-skew** allows you to turn the digital skew correction on or off.
- **Reduce scan speed to enhance quality** allows you to reduce the scan speed to get better scan results when scanning at 200 and 300 dpi.
- **Print quality** allows you to set the print quality to **Lines/Fast**, **Uniform areas**, or **High detail**.
- **Output scale** allows you to select the output page size.
- **Paper source** allows you to specify printing on roll 1 or roll 2, or you can choose **Save paper**, which automatically chooses the narrowest roll on which the print will fit (if two rolls are loaded).

NOTE: The printer setting **Roll width selection** has two values: **Print on same width only** and **Print on same width or wider**. When **Print on same width only** is selected, each page is printed only on a roll with the same width as the page.

- **Paper category** allows you to change the paper category used for printing.
- **Rotation** allows you to set the rotation to **Automatic**, **0 degree**, **90 degree**, **180 degree**, or **270 degree**.
- **Alignment** allows you to decide the position of the image on the roll.
- **Copy margins** allows you to change the default printer margins.
- **Job storage mode** offers two options:
  - **Print and delete**: The job is not retained in the job queue.
  - **Print and store**: The job is retained in the job queue.
- **Output destination** allows you to select the paper output from those available to the printer.
- **Folding style** allows you to select the folding style when the folder is installed. To use the folder, you must select **Folder** in the **Output destination** setting.

Scanner preferences

The following sections provide details for this topic.

You can select the following settings by tapping ⚙, then **Scanner preferences**.

- **Print Scanner IQ plot** see Scanner diagnostic plot on page 131 for details.
- **Calibrate Scanner** see Calibrate the scanner on page 186 for details.
- **Load delay** allows you to add a delay before the scanner feeds in the original document.

NOTE: The minimum delay is 1 second, you can add more if required.

- **PDF/A** allows you to enable the PDF/A format for archiving.
- **Enhanced colors for white papers** allows you to capture enhanced colors when the **Original paper type** is **White paper**.

- **Set scanner Y-axis scale** allows you to adjust the aspect ratio to prevent vertical distortion. It is important in CAD plots to maintain the aspect ratio of the originals. Enter a value between -1.00 and 1.00. To access this feature, a PIN is required, which can be obtained by contacting HP support.

Scanner troubleshooting

In this section the most common defects and failure modes are shown, sorted by relevance and frequency of appearance. A defect is a common image artifact that usually appears when using any CIS scanner. These are due to incorrect settings, product limitations, or easily solvable mistakes. A failure mode is due to malfunctions of some of the scanner components.

Some of the corrective actions proposed here require the use of the scanner diagnostic plot, which you can print and scan as indicated in Scanner diagnostic plot on page 131. Do not use any printed version of this guide to test the scanner, as the resolution of the images included here is insufficient. Use the diagnostic plot when recommended in response to any of the errors described in this chapter.

You are recommended to clean the CIS sensors at first installation, and at any time for good scanning quality.

Random vertical lines

The following steps provide the complete procedure for this topic.

This is one of the most common issues in sheet-fed scanners. Usually, the vertical streaks are caused by dust particles inside the scanner, or miscalibration of the scanner (in these cases, the problem can be solved). Here are some examples of images suffering from vertical lines or streaks. Note the black arrow indicating the scanning direction in these examples.

1. Clean the scanner's glass plate and the original to be scanned as described in Clean the scanner's glass plate on page 183. Re-scan your original afterwards.
2. If the streaks remain, recalibrate the scanner as indicated in Calibrate the scanner on page 186. Make sure you clean the maintenance sheet before calibrating the scanner, and check that the maintenance sheet is not damaged (if so, call your support representative and ask for a new maintenance sheet). Re-scan your original after the calibration is completed.
3. If the streaks still remain, check the scanner's glass plate visually. If it is damaged (scratched or broken), call your support representative.
4. If the streaks remain, there may be dust particles inside the glass plate. Carefully take out the glass plate and clean it as described in Clean the scanner's glass plate on page 183.

NOTE: The problem of vertical streaks cannot always be solved, due to the technological limitations of CIS technology. HP offers HD Scanners with CCD technology for higher quality requirements. If the streaks remain after the corrective actions explained above, then no further action can be taken to improve the image quality, except to buy a more expensive CCD scanner.

Wrinkles or folds

The following steps provide the complete procedure for this topic.

Scanners based on CIS technology have a high optical resolution within their focus plane, at the price of a very limited depth of field. Hence, the images are sharp and detailed when the scanned original is perfectly flat against the glass plate. However, whenever the original contains wrinkles or folds, these defects are clearly visible in the scanned image (as shown in the following example).

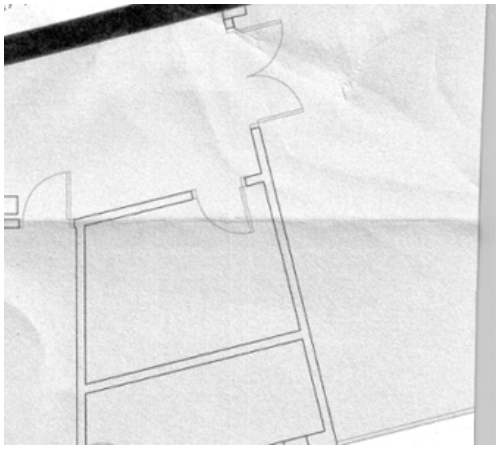

1. Re-scan the original, setting the content type to **Image**, and contrast and background cleaning to zero.
2. If the problem persists, re-scan the original at a lower scanner resolution (Standard quality if scanning, Fast or Normal if copying). It may also help to flatten the original manually as much as possible before scanning it again.

NOTE: The problem of wrinkles cannot always be solved, due to the technological limitations of CIS technology. HP offers HD Scanners with CCD technology for higher quality requirements. If the wrinkles remain after the corrective actions explained above, then no further action can be taken to improve the image quality, except to buy a more expensive CCD scanner.

Line discontinuities

The following steps provide the complete procedure for this topic.

When scanning or copying large originals, you may sometimes find issues such as that shown in the following image, where a straight line (it does not necessarily have to be horizontal) appears with discontinuities or small steps. Note the black arrow indicating the scanning direction in this example.

1. Repeat the scan, preferably using a higher resolution, and this time make sure that the product is correctly positioned (it is flat on the floor and it does not move), and that the printer is not printing while you scan. Turning the original 90 or 180 degrees and scanning it again may also solve the problem.
2. If the problem persists, check that the original to be scanned is not skewed, and that it does not become skewed during the scan. If so, see Incorrect paper advance, skew during scanning, or

horizontal wrinkles on page 126. You might also want to deactivate the automatic de-skew algorithm as indicated in Copied or scanned image is very skewed on page 129.

3. If there is no skew but the problem persists, clean and calibrate the scanner as indicated in Scanner maintenance on page 183. Take care not to move the printer during the calibration (the printer should not be printing during scanner calibration), and check that the maintenance sheet is correctly positioned before starting the calibration. Also check that the maintenance sheet is not damaged before calibrating the scanner (an old or damaged maintenance sheet may cause this problem); if it is damaged, call your support representative and ask for a new maintenance sheet.

4. If the problem persists, proceed to analyze the following areas of the diagnostic plot:

   a. 4 (from module A to E).

   b. 10, at the intersection between modules.

   c. 13 in modules A and E, and 14 in modules B, C, and D.

   If you see any of these defects in the studied areas, call your support representative and report a "line discontinuities" error after calibration.

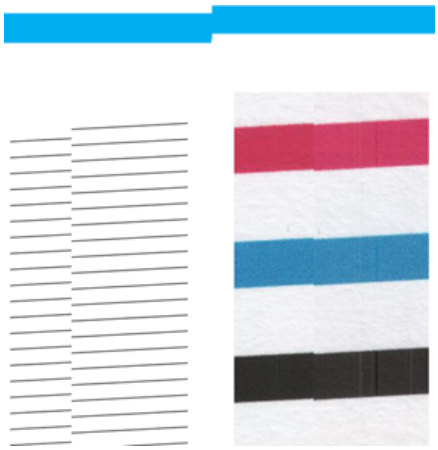

The four vertical thin black lines at the beginning and the end of the diagnostic plot show, approximately, the position of the intersection between CIS modules, where this kind of error usually appears. If the error appears outside these areas, call your support representative and report "line discontinuities within a CIS module".

Small color differences between adjacent CIS modules

The following steps provide the complete procedure for this topic.

When scanning wide plots, sometimes slightly different colors can be seen at both sides of the junction between two CIS modules. This issue, if present, can be easily seen by analyzing patterns 9 of the diagnostic plot at the intersection between CIS modules. Here are some examples. Note the black arrow indicating the scanning direction in these examples.

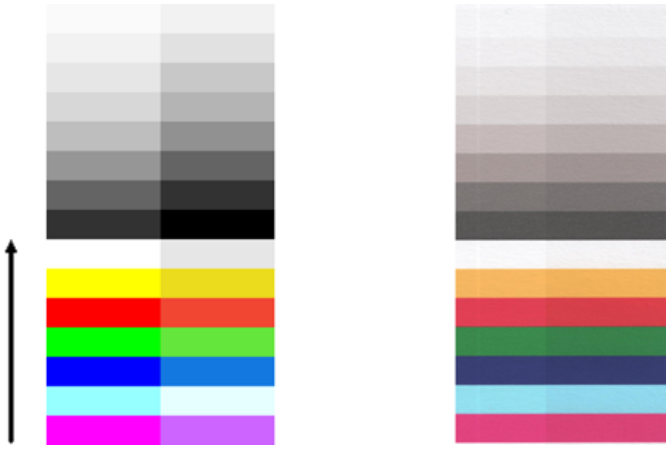

Sometimes the color mismatch between adjacent modules can be enormous, showing a serious scanner malfunction, as in the following example.

1. Repeat the scan or copy, setting the content type to **Image**, reducing the background cleaning to 0 or turning the original 90 degrees before scanning it again.
2. If the problem persists, clean and calibrate the scanner as indicated in Scanner maintenance on page 183. If calibration ended without errors, proceed to analyze again pattern number 9 and modules A through E of the diagnostic plot.
3. After analyzing pattern 9, if you see some color differences between left and right sides of the bars for neutral and vivid colors, call your support representative and report “small color differences between adjacent CIS modules”.

Variable line thickness or missing lines

The following steps provide the complete procedure for this topic.

When scanning some CAD plots at Standard resolution, mostly when working with grayscale or black-and-white prints that contain very thin lines, you may see a variation in line thickness, or even some missing lines, in some places:

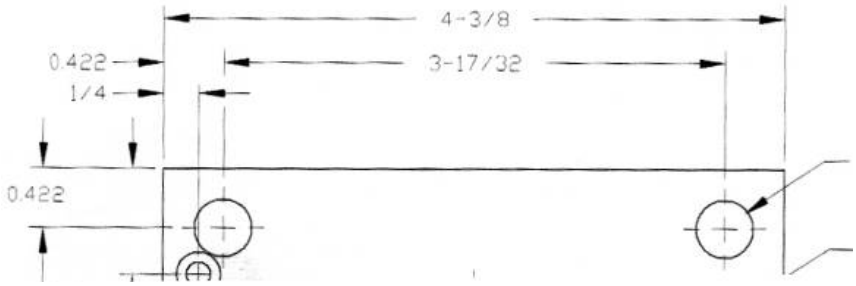

1. Repeat the scan or copy using a higher resolution (High or Max if scanning, Normal or Best if copying). You should also set background cleaning to 2, or set the content type to **Mixed**. You might also deactivate the automatic de-skew as explained in Copied or scanned image is very skewed on page 129. In case you were working in black-and-white mode, we recommend using grayscale instead.

2. If the problem persists, turn the original plot 90 degrees before scanning it again.

3. If the problem persists, clean and calibrate the scanner as indicated in Scanner maintenance on page 183.

Inaccurately reproduced colors

The following steps provide the complete procedure for this topic.

You have to deal with several variables if you want perfect color matching between the original you are scanning and the copy or scanned file you obtain as a result. If you find undesired colors in cases like the example shown below (original on the left, scanned image on the right), you can follow these guidelines.

1. Make sure that you choose the correct paper type in the scan settings before scanning.

2. When dealing with copies, you must take into account that good color matching between a given original and its copy can be achieved only if both are printed on the same type of paper. In the case of scanned files, good color matching can be achieved only if your monitor is color-calibrated or compliant with sRGB or AdobeRGB standards.

3. If the above conditions are met, you should also take into account that various scanner settings can affect the final color result, such as contrast, background cleaning, content type and paper type. To obtain the best possible colors, set contrast and background cleaning to 0, set the content type to **Image**, and select the most appropriate type of paper according to the original you are scanning (if in doubt, use photo paper).

4. Note that the image enhancement settings are automatically reset to default values after a certain time, so you may get a different result from copying the same original if you have not checked the settings before starting the job.

5. If you scanned to a PDF file, try opening the PDF file in Adobe Acrobat and saving it as a PDF/A file. For more information, see http://www.adobe.com/products/acrobat/standards.html (English only).

6. For optimum color results, clean and calibrate the scanner as indicated in Scanner maintenance on page 183.

7. Avoid placing the scanner in direct sunlight or near sources of heat or cold.

Color fringing

The following steps provide the complete procedure for this topic.

The problem called "color fringing" occurs when the scanner is affected by incorrect paper advance and/or miscalibration. Nevertheless, some amount of color fringing is unavoidable, especially at high scanning speeds. It can be seen at the borders of sharp black text over a white background, as in the example below (original on the left, scanned image on the right). Note the black arrow indicating the scanning direction.

1. Repeat the scan after increasing the scanner's resolution (choose Max quality if scanning, Best if copying). Turn your original 90 degrees, if possible, before scanning it again.

2. If the problem persists, clean and calibrate the scanner as indicated in Scanner maintenance on page 183. Repeat the scan at a high resolution (Max if scanning, Best if copying) and check whether the problem disappears.

3. If the problem still persists, you can diagnose this issue by analyzing the patterns 6 and 8 (A to E) of the diagnostic plot. The black horizontal lines appear slightly colored at the top and bottom of each end (in the example on the right, below). Normally, they look red at the top and blue or green at the bottom, but it could be the other way around.

If you see this effect, call your support representative and report "color fringing problem after calibration".

Vibration

The following steps provide the complete procedure for this topic.

If your printer is not properly placed on a flat surface, or if the scanner lid does not close correctly, you may sometimes find that the scanned image suffers from vibration, as in the following example: original on the left, scanned image on the right.

1. Make sure that the scanner is placed on a flat surface, the scanner lid is correctly closed, and the printer is not working while you are scanning. Scan your original again.

2. If the problem persists, change (increase or decrease) the scanning resolution and re-scan your original. We also recommend turning the original 90 degrees before scanning it again.

3. If the problem persists, analyze pattern 4 of the diagnostic plot. If you see the problem shown on the right, call your support representative and report a "vibration problem".

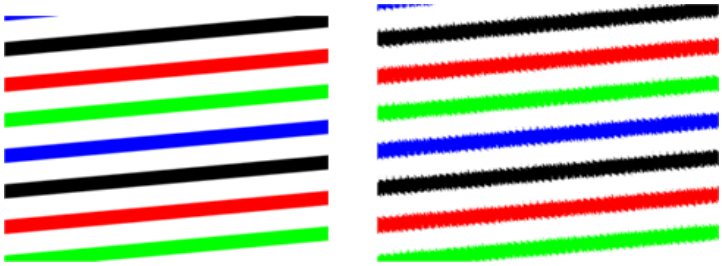

Incorrect paper advance, skew during scanning, or horizontal wrinkles

The following steps provide the complete procedure for this topic.

You may encounter problems with some thick glossy originals being moved through the scanner's paper path. In some cases, the original may become skewed during the scanning process.

If some of the paper rollers are not working correctly, you may find small horizontal wrinkles in the scanned image, due to the paper being stuck in some regions while not in others.

1. Turn your original 90 degrees and repeat your scan.

IMPORTANT: Do not hold the paper while it is being scanned.

2. If the problem persists, open the scanner lid. Clean the transport wheels (small gray rubber) and the pressure rolls (wide white plastic). Check that all the pressure rolls can move freely. If you find dust particles or objects that obstruct the movement of the rollers, try to remove them, then close the scanner lid and repeat your scan.

3. If the problem persists, restart the scanner by turning it off and on again. If you find an error message on the front panel during this operation, call your support representative and report the error message. If no error message appears, try repeating your scan.

4. If the problem persists, analyze patterns 4, 13 and 14 of the diagnostic plot. The plot should look like this:

If you see an image resembling the incorrect examples below, call your support representative and report an "incorrect paper advance" problem.

Vertical black band 20 cm wide

The following steps provide the complete procedure for this topic.

Your scanner contains various different CIS modules, each of which covers an area 20 cm (7.9 in) wide. If one of the modules fails, and the scanner hardware check does not detect the failure, you may see a black vertical band, corresponding to the area covered by a single CIS module, in your scanned image or copy.

Here is an example: original on the left, scan on the right. The black arrow indicates the scanning direction.

1. Open the lid of the scanner and check that the five CIS modules show blinking red, green and blue lights alternately. If a module is failing, call your support representative and report a “CIS module illumination” error.
2. If all the modules lit up correctly in the previous step, restart the scanner by turning it off and on again. If you find an error message on the front panel during this operation, call your support representative and report the error message. If no error message appears, try repeating your scan.
3. If the problem persists, try to calibrate the scanner as indicated in Calibrate the scanner on page 186. If this operation fails, call your support representative with the error code given on the front panel. If no error code appears, try to repeat your scan.
4. If the problem persists, call your support representative and report a “vertical black band 20 cm wide”.

Scanner damages some originals

HP is aware that this scanner may cause vertical scratches on inkjet originals on thick glossy paper. Very thin tracing paper or old originals may also be damaged. This is because CIS technology requires the original to be held down with high pressure to obtain accurate results and avoid blurring and defocus problems.

If the original you intend to scan is valuable, and if it belongs to one of the types described above (inkjet-printed, thick, glossy original or old/thin/tracing paper original), HP recommends using a CCD scanner such as the HP DesignJet T1200 HD MFP.

Object replication (ghosting)

The following steps provide the complete procedure for this topic.

This error very rarely appears in CIS scanners. However, you can occasionally find image defects like the following: original on the left, scanned image on the right.

Image © www.convincingblack.com, reproduced with permission.

1. Restart your printer. Then calibrate the scanner, as indicated in Calibrate the scanner on page 186, and repeat your scan. Turn the original 90 degrees if possible before rescanning.

2. If the problem persists, analyze pattern 3, modules A through E, of the diagnostic plot. Call your support representative and report an “object replication“ issue if you see the kind of error shown on the right.

Clipping or incorrect scale factor when down-scaling in copies and prints

When doing copies or prints (from USB, or printer driver), the scaling setting is available with various possible options. If you are experiencing problems related to border clipping, or it seems that your print has lost the scale-factor adjustment, read this section carefully in order to select the best value for the scaling setting in future jobs.

- **Precise scaling:** In this case, the content of the original image is scaled by the percentage factor that you have selected. For example, in an original CAD image with a 1:100 scale, if user selects scale to 50%, the printed plot will have an accurate scale of 1:200. Nevertheless, in the case of down-scalings when selecting a fixed percentage, some clipping of the marginal content of the plot may occur, as it is impossible for the printer to print up to the borders of the paper.

- **Scale to fit into page size:** In this case, the content of the original image is scaled by the percentage necessary to make sure that all the content is correctly printed and no clipping occurs. Nevertheless, in the case of down-scalings when selecting fit to page, the scale-factor adjustment may not be an integer divisor of the original. For example, in an original CAD plot with a 1:100 scale on A2 paper size, if user selects scale to fit on A3 paper size, the scaling factor will not be exactly 50% and the scale of the printed plot will not be 1:200 exactly. However, the plot will be printed completely without clipping any content.

Incorrect edge detection, mostly when scanning tracing paper

The following steps provide the complete procedure for this topic.

Tracing or translucent papers can be scanned with good results, although totally transparent papers are not supported. Nevertheless, the resulting image may have extra margins or some clipping of the content in some situations when detection of the edge of the paper is not accurate, which may also happen when scanning plain paper if the glass plate is dirty. In order to avoid these undesired effects, follow these recommendations.

1. Carefully clean the scanner's glass plate and the original to be scanned with a cloth. Turn the original 90 degrees if possible and re-scan it afterwards. Remember to select **Translucent** as the paper type at the scanner if your original is translucent.

2. If the problem persists, calibrate your scanner, and re-scan your original again afterwards.

3. If the problem persists in the case of translucent paper, attach a sheet of white paper to the back of the original to be scanned. Remember to select **White paper** as the paper type for the scanner in this case.

Copied or scanned image is very skewed

Originals are often loaded into the scanner with some degree of skew. In order to correct for this unavoidable problem, the scanner has a built-in automatic de-skew algorithm, which measures the skew in the original and rotates the scanned image so that the result is perfectly straight. However, in some cases the de-skew algorithm may increase the skew rather than correcting it. In other cases, the skew is so bad that it cannot be automatically corrected.

To load the original with minimum skew, grasp the original with the image facing up and your hands at left and right edges. You are recommended to avoid resting your hands or the original on the scanner's input tray. Push the original into the scanner insertion slot until you feel the whole top border of the original pressing against the scanner rubber rolls, which will load the original after a delay of 0.5 seconds. Now you can take your hands off the original. If you are not happy with the way the scanner has grabbed your original, you can tap and try again.

The action of the automatic de-skew algorithm can be deactivated by tapping , or . Select the quickset to use, then tap **more settings** and disable the **de-skew** setting.

Cannot access the network folder

The following sections provide details for this topic.

If you have set up a network folder, but the printer cannot access it, try the following suggestions:

- Check that you have filled in each field correctly. See Configure a network folder on page 24.
- Check that the printer is connected to the network.
- Check that the remote computer is switched on, working normally and connected to the network.
- Check that the folder is shared and that you have the correct permissions and functionality use of it.
- Check that you can put/read files (depending of the functionality use), to the same folder from a different computer on the network, using the printer's logon credentials.
- Check that the printer and the remote computer are in the same network subnet; if they are not, check that the network routers are configured to forward the CIFS protocol traffic (also known as Samba).

Scanning to file is slow

The following steps provide the complete procedure for this topic.

Scanning large formats creates large files. This means that scanning to file can take time even under optimal system configurations and conditions. This is especially true when scanning across a network. However, if you think scanning to file with your system is unreasonably slow, the following steps may help you to locate and solve the problem.

1. Use the front panel to check the status of your scan job. If it is taking an intolerably long time, you can select the job and then cancel it.
2. Check that the **Resolution** setting is right for the job. Not all scanning tasks require high resolutions. If you lower the resolution, you will speed up the scanning process. For JPEG and PDF scan jobs, you can also change the **Quality** setting. Lower quality values produce smaller files.
3. Check your network configuration. Your network should be a Gigabit Ethernet or one of a higher transfer rate in order to achieve optimal scanning speeds. If your network is a 10/100 Ethernet configuration, you can expect slower transfer of the scan data and thus slower scanning speeds.
4. Contact your network administrator for information about your network configuration, transfer rates, scan-to-file destinations on the network and possible solutions for increasing the speeds.
5. If scanning to files on the network is too slow and the network configuration cannot be amended to correct this, improved speeds can be achieved by scanning to a USB flash drive.
6. If scanning to a USB flash drive seems slow, check your USB flash drive interface compatibility. Your system supports a Hi-Speed USB interface. Your USB flash drive should be compatible with Hi-Speed USB (sometimes known as USB 2). Also check that your USB flash drive contains enough storage space for scanned large-format images.

Scanner diagnostic plot

The following sections provide details for this topic.

Prepare the printer and the paper to print the diagnostic sheet

Turn on your printer and wait until it is functioning. Then select the paper on which the diagnostic plot is going to be printed (you can reuse the diagnostic plot any time in the future, if it is saved carefully). Ideally, the diagnostic plot should be printed on glossy paper, and you are highly recommended to do that if you use your printer mostly for scanning or copying photo originals (posters, pictures printed on glossy paper, etc). If you use your printer mostly to scan or copy matte originals, then you can use any matte white paper to print the diagnostic plot. Do not use recycled or tracing paper to print this plot. The size of the diagnostic plot is 610 × 914 mm (24 × 36 in). It can be printed on any 914 mm (36 in) landscape or 610 mm (24 in) portrait paper roll. You can also use a single sheet that is at least 610 × 914 mm (24 × 36 in).

Once the correct paper is loaded, if this paper permits color calibration then we recommend color-calibrating the printer.

You can print the diagnostic plot from the front panel: tap ⚙, then **Scanner Preferences** > **Scanner IQ plot**.

Visual check for errors while printing the diagnostic sheet

Once the diagnostic plot is printed, the first step is to check that all the patterns included in it are correctly printed. The diagnostic plot, if printed correctly, should look like this:

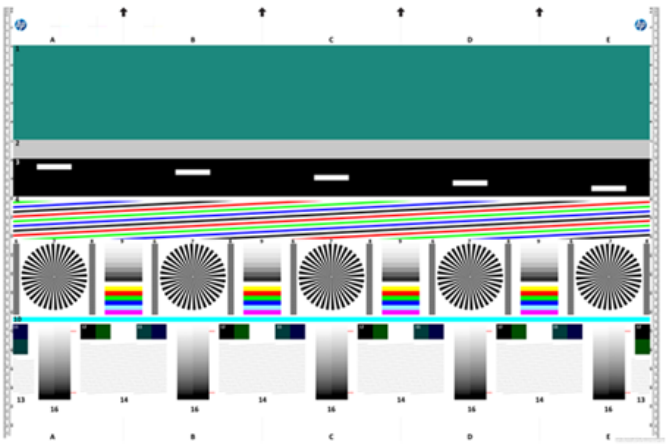

If you see any problems, you should follow the recommended recovery procedure, all of which are available by tapping ⚙, then **Scanner Preferences** > **Print Scanner IQ Plot** at the front panel. Once the printer has been diagnosed and it is working correctly, you can reprint the diagnostic plot as described in Scanner diagnostic plot on page 131.

Scan or copy the diagnostic plot

There are two options for evaluating the diagnostic plot: scanning into a JPEG file, or copying onto paper. We recommend using the scan option, so that the generated file can be analyzed more easily by a remote support engineer if necessary. If you decide to scan the plot, first adjust your computer's monitor. Once you have scanned the diagnostic plot, remember to open the scanned file in any image viewer software and select a zoom of 100% for correct visual evaluation of patterns.

If you decide to copy, make sure that a paper roll at least (36 in) (914 mm) wide is loaded in the printer. Ideally, the same type of paper used to print the diagnostic plot should be used for copying it.

These are the settings that you should select:

Scan

- Quality: Max
- File type: JPG
- Content type: Image
- Compression: medium
- Paper type: photo or matte, according to the paper used to print the diagnostic plot. Use photo if in doubt.

Copy

- Quality: Best
- Content type: Image
- Paper type: photo or matte, according to the paper used to print the diagnostic plot. Use photo if in doubt.

Load the diagnostic plot into the scanner input tray, making sure that the printed side of the plot is facing up. The black arrows on the diagnostic plot indicate the direction of loading. Make sure that the diagnostic plot is loaded without skew, and it is centered (that is, it covers the whole scanner area).

Once you have scanned the diagnostic plot (in case you selected the scan option), remember to open the scanned file in any image viewer software and select a zoom of 100% for correct visual evaluation of patterns.

NOTE: The monitor on which the plot is going to be evaluated should ideally be calibrated.

NOTE: Store the diagnostic plot for future use to save reprints.

Scan from the HP Smart App

You can also scan directly to your mobile device by using the HP Smart App (available for Android and iOS).

For more information, see Print, scan, and share from the HP Smart App on page 90.

9 Color management

The following sections provide details for this topic.

Introduction

Color management is performed using a set of software tools that allow you to reproduce a color as accurately as possible on any display or printing device.

In addition, your printer has been engineered with advanced hardware and software features to ensure predictable and dependable results.

- Color calibration for consistent colors
- The Photo Black ink provides pure blacks when printing on photo papers

How colors are represented

Color is usually represented as an array of numbers: three numbers in the RGB color model or four in the CMYK color model. These numbers are a measure of the base colors used in a mixture to create a given color. RGB means that we are using a mixture of Red, Green, and Blue to create any specific color. In the case of CMYK, the mixture is of Cyan, Magenta, Yellow, and Key (where Key means black, for historical reasons).

Most monitors use the RGB color model, while most printers use the CMYK color model.

An image can be converted from one color model to another, but in general the conversion is not perfect. Your printer uses the RGB color model: the same color model that is used by your monitor.

This simplifies but does not completely solve the problem of matching colors. Each device represents colors a little differently from another device, even if they use the same color model. However, color management software can adjust the colors in an image according to the characteristics of the particular device, using a color profile of the device, in order to achieve correct colors.

A summary of the color management process

To get the accurate and consistent colors that you want, you should follow these steps for each paper type that you use.

1. Color-calibrate the paper type, for consistent colors. Calibration should be repeated every now and then (see A summary of the color management process on page 133). In addition, you may wish to calibrate immediately before a particularly important print job for which color consistency is vital.

2. When printing, select the correct paper preset for the paper type you are using. The paper preset contains the color profile* as well as various other characteristics of the paper. See Paper presets on page 50.

*A color profile is a description of a printer, ink, and paper combination, that contains all the information required for these color conversions.

Color calibration

The following steps provide the complete procedure for this topic.

Color calibration enables your printer to produce consistent colors with the particular printheads, inks and paper type that you are using, and under your particular environmental conditions. After color calibration, you can expect to get similar prints from any two different printers situated in different geographical locations.

Some paper types cannot be calibrated. For all other paper types, calibration should be done in any of the following circumstances:

- Whenever a printhead is replaced
- Whenever a new paper type is introduced that has not yet been calibrated with the current set of printheads
- Whenever the environmental conditions (temperature and humidity) change significantly

You can check the color calibration status of the currently loaded paper at any time by going to the front panel and tapping , then ···, then , then **Color calibration status**. The status may be one of the following:

- **Recommended**: The paper has not been calibrated.

NOTE: Whenever you update the printer's firmware, the color calibration status of all papers is reset to **Recommended**.

- **Obsolete**: The paper has been calibrated, but the calibration is now out of date because a printhead has been replaced, and should be repeated.
- **Done**: The paper has been calibrated, and the calibration is up to date.
- **Disabled**: This paper cannot be calibrated.

NOTE: Color calibration cannot be performed on plain paper, nor on any kind of transparent material.

You can start color calibration from the front panel: tap , then **Color calibration**, and press **Continue**. Choose the paper and press **OK**.

The calibration process is fully automatic and can be performed unattended after you have loaded paper of the type you wish to calibrate—which should be wider than 355 mm (14 in). If you have more than one roll loaded, the printer will ask which roll you want to use for the calibration.

The process takes about 3 - 5 minutes and consists of the following steps:

1. A calibration chart is printed, which contains patches of each ink used in your printer.

2. The chart is allowed to dry for a period of time that depends on the paper type, so that the colors have time to stabilize.
3. The chart is scanned and measured.
4. From the measurements, the printer calculates the necessary correction factors to apply for consistent color printing on that paper type. It also calculates the maximum amount of each ink that can be applied to the paper.

Color management from printer drivers

The following sections provide details for this topic.

Color management options

The aim of color management is to reproduce colors as accurately as possible on all devices: so that, when you print an image, you see very similar colors as when you view the same image on your monitor.

There are two basic approaches to color management for your printer:

- **Printer-Managed Colors**: In this case your application program sends your image to the printer without any color conversion, and the printer converts the colors to its own color space. The details of this process depend on the graphics language that you are using. HP recommends this setting for the best experience and results.
  - **PostScript:** The PostScript and PDF interpreter modules perform the color conversion using the profiles stored in the printer and any additional ICC color profiles sent with the PostScript job. This kind of color management is done when you are using the PostScript or PDF driver.
  - **Non-PostScript (PCL3, CALS/G4):** The color management is done using a set of stored color tables. ICC profiles are not used. This method is somewhat less versatile than the alternatives, but is a little simpler and faster, and can produce good results with standard HP paper types.

    NOTE: In non-PostScript printing, the printer can convert to sRGB if you are using Windows, or to Adobe RGB if you are using Mac OS X.
- **Application-Managed Colors**: In this case your application program must convert the colors of your image to the color space of your printer and paper type, using the ICC profile embedded in the image and the ICC profile of your printer and paper type.

IMPORTANT: Make sure to select matching settings in the driver and in the application.

You are recommended to consult the HP Support Center (see Color management options on page 136) to see how to use the color management options of your particular application. See also Color management options on page 136.

To choose between **Application-Managed Colors** and **Printer-Managed Colors**:

- **In the Windows driver dialog:** Select the **Color** tab.
- **In some applications:** You can make this choice in the application.

Color options

The following sections provide details for this topic.

Printing in color

The printer prints in color by default.

You can select color printing explicitly in the following ways:

- **In your application program:** Many programs provide this option.
- **In the Windows driver dialog:** Go to the **Color** tab and look at the Output Color or Color Options section (whichever is available in your driver). Select **Print in color**.

Printing in grayscale

This topic explains the concepts involved in this subject.

You can convert all colors in your image to shades of gray in the following ways:

- **In your application program:** Many programs provide this option.
- **In the Windows driver dialog:** Go to the **Color** tab and look at the Output Color or Color Options section (whichever is available in your driver). Select **Print in grayscale**.

Printing in pure black and white

This topic explains the concepts involved in this subject.

You can convert all colors in your image to pure black and pure white in the following way:

- **In the Windows driver dialog:** Go to the **Color** tab and look at the Output Color or Color Options section (whichever is available in your driver). Select **Print in pure black and white**.

HP Professional PANTONE Emulation

When you use a named PANTONE color in an image, your application will normally send to the printer a CMYK or RGB approximation to that color. But the application does not take the printer or the paper type into account, it merely produces a generic approximation of the PANTONE color, which will look different on different printers and on different papers.

HP Professional PANTONE Emulation can do a much better job by taking into account the characteristics of the printer and the paper type. The results look as similar to the original PANTONE colors as is possible on a given printer using a given paper type. This technology is designed to produce emulations similar to those set up manually by prepress professionals.

To use HP Professional PANTONE Emulation, all you have to do is to turn it on. In fact, it is normally on by default.

- **In the Windows PostScript/PDF driver dialog:** Go to the **Color** tab and select **HP Professional PANTONE Emulation**.
- **From the front panel**: Tap ⚙, then **Default printing configuration** > **Color options** > **HP Pantone Emulation**.
- **In the Embedded Web Server**: From the main menu, select the **Color** tab.

HP Professional PANTONE Emulation not only provides the closest match that can be achieved on your printer; it also gives clear information on how close the emulation is to the original spot color.

Default color spaces

When a document or image does not specify the working color space in which the content is originally described, the user can choose among different standards. That is, the user can determine how data should be interpreted by the color management system during the rendering process.

You can set source profiles in the following ways:

- **In the Windows PostScript/PDF driver dialog:** Select the **Color** tab, and **Printer Managed Colors**.

The standard way of encapsulating such information is in ICC profiles. As part of the solution, we provide the most common standards for the different devices.

The options are as follows.

Default RGB source profiles

This topic explains the concepts involved in this subject.

Your printer is provided with the following color profiles:

- **None (Native)**: No imitation, for use when the color conversion is done by the application or operating system, and therefore the data arrive at the printer already color-managed. Available for PostScript and PDF drivers only.
- **sRGB IEC61966-2.1** imitates the characteristics of the average PC monitor. This standard space is endorsed by many hardware and software manufacturers, and is becoming the default color space for many scanners, printers and software applications.
- **Adobe RGB (1998)** provides a fairly large gamut of RGB colors. Use this space if you need to do print production work with a broad range of colors.
- **ColorMatch RGB** imitates the native color space of Radius Pressview monitors. This space provides a smaller gamut alternative to Adobe RGB (1998) for print production work. Available for PostScript and PDF drivers only.
- **Apple RGB** imitates the characteristics of the average Apple monitor, and is used by a variety of desktop publishing applications. Use this space for files that you plan to display on Apple monitors, or for working with old desktop publishing files. Available for PostScript and PDF drivers only.

Default CMYK source profiles

You can choose from a selection of CMYK source profiles recognized by the printer. The default CMYK profile is Coated FOGRA39 (ISO 12647 - 2:2004), available for PostScript drivers only.

Color management from the front panel

You can color-calibrate the loaded paper type from the front panel

By tapping , then **Color calibration**, then **Continue** and choose paper. See Color calibration on page 134.

The other color options in the front panel can all be found by tapping , then **Default printing configuration** > **Color options** (they can also be found under **Advanced printing preferences**).

Color/Grayscale

- **Print in color**
- **Print in grayscale**
- **Print in pure black and white**

RGB source profile

You can choose from a selection of RGB source profiles recognized by the printer. Default: **sRGB IEC 1966-2.1**.

- **Select CMYK source profile**: You can choose from a selection of CMYK source profiles recognized by the printer. Default: **Coated FOFRA39 (ISO12647-2:2004)**.
- **Select rendering intent**: You can select the rendering intent. Default: **Perceptual**.
- **Black point compensation**: You can turn black point compensation on or off. Default: **On**.
- **HP Professional PANTONE Emulation**: You can turn HP Professional PANTONE Emulation on or off. Default: **On** (PostScript and PDF jobs only).

10 Practical printing examples

The following sections provide details for this topic.

Print a draft for revision with the correct scale

This section demonstrates how to print a draft for revision with the correct scale from Adobe Acrobat.

Using Adobe Acrobat

The following steps provide the complete procedure for this topic.

1. In the Acrobat window, bring the mouse cursor to the bottom left corner of the document pane to check the page size.

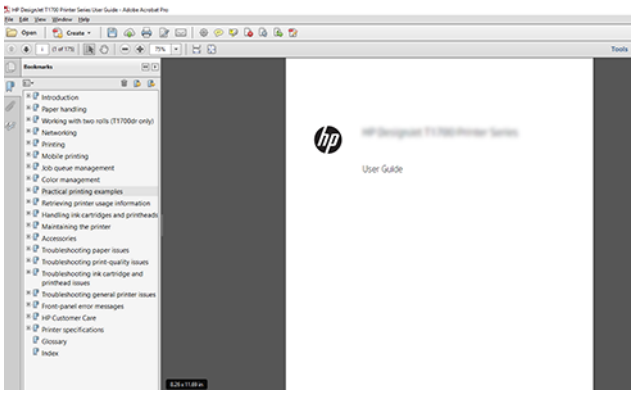

2. Select **File** > **Print** and ensure that **Page Sizing & Handling** is set to **Actual size**.

NOTE: The page size will **not** be automatically selected according to the drawing size.

3. Click the **Properties** button and then select the **Paper/Quality** tab.
4. Choose whatever **Document Size** and **Print Quality** you want to use. If you want to define a new custom paper size, click the **Custom** button.

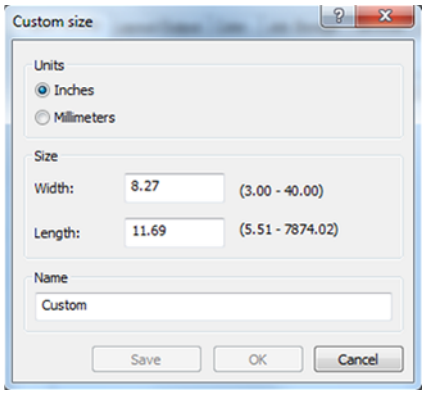

5. Select the **Features** tab, and then **Autorotate**.
6. Click **OK**, and check that the print preview in the **Print** dialog box seems correct.

Print a PDF multipage job from Adobe Acrobat Reader or Adobe Acrobat Pro

Using a raster driver

The following steps provide the complete procedure for this topic.

1. Open a multipage job in Adobe Acrobat Reader or Adobe Acrobat Pro (HP recommends always using the latest version).
2. Click **File** > **Print**.
3. Select the printer and driver.
4. Check the **Choose paper source by PDF page size** box.

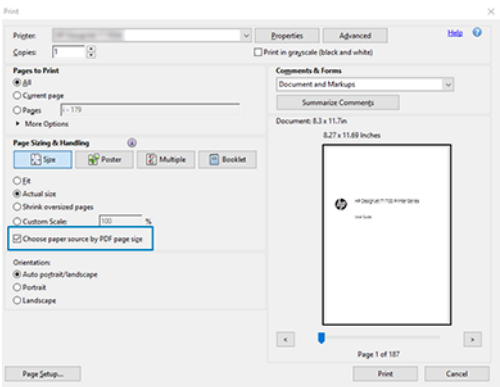

5. Adjust other properties in the driver properties window, as required.
6. Click the **Print** button.

The pages will be printed on the standard page size closest to the page size in the original document.

Using a PostScript driver

The following steps provide the complete procedure for this topic.

1. Open a multipage job in Adobe Acrobat Reader or Adobe Acrobat Pro (HP recommends always using the latest version).
2. Click **File** > **Print**.
3. Select the printer and driver.

4. Check the **Choose paper source by PDF page size** and **Use custom paper size when needed** boxes.

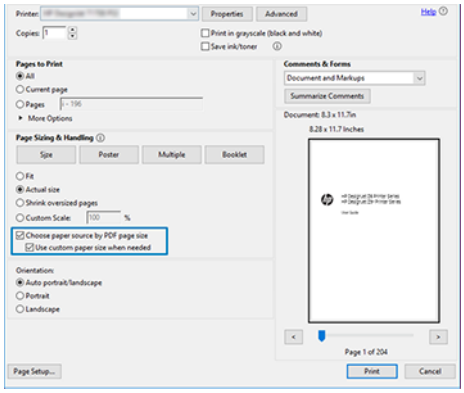

5. Adjust other properties in the driver properties window, as required.

6. Click the **Print** button.

If you checked the **Use custom paper size when needed** box, the pages will be printed on paper sizes corresponding to the page sizes in the original document.

Using a PDF driver

With the latest versions of Adobe Acrobat Pro or Adobe Acrobat Reader, this is managed by the application, and the pages will be printed on paper sizes corresponding to the page sizes in the original document.

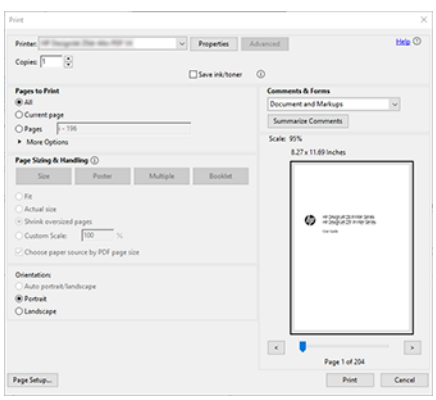

Print a document with the correct colors

This section demonstrates how to print a document from Adobe Acrobat and Adobe Photoshop, with the emphasis on color management.

Using Adobe Acrobat Reader

The printing process is very simple.

Acrobat Reader is the most basic application for PDF files; several color management tools common in more sophisticated applications are not explicitly present, and work by default with presets that cannot be changed. For example, there is no way to select a working color space; a default color space, most likely sRGB, is applied. This color space is used for screen display, for example. Also, as an alternative color profile when no other is specified by a file, as will be explained later.

1. Click **File** > **Print**.
2. Select the printer and driver from the **Printer** drop-down menu in the **Print** dialog box. Driver settings can be adjusted by clicking the **Properties** button.

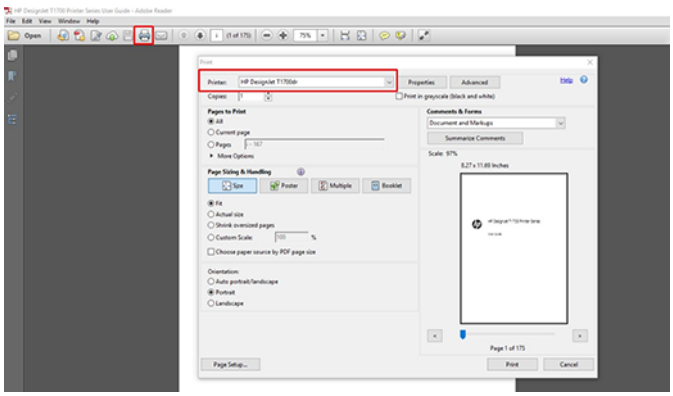

3. Adjust the color settings in the driver properties window. Click the **Properties** button in the **Print** dialog and set the **Color** option in the **Color** tab. Check the box **Printer Managed Colors** and, if you have a V4 driver, select the most convenient source profile. Click **OK**.

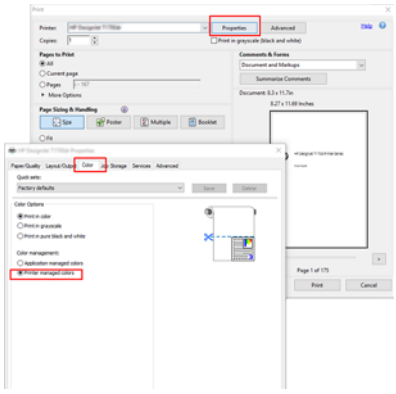

4. If you have a V3 driver, click the **Advanced** button in the Print dialog box to set color management options. Check the box **Let printer determine colors**.

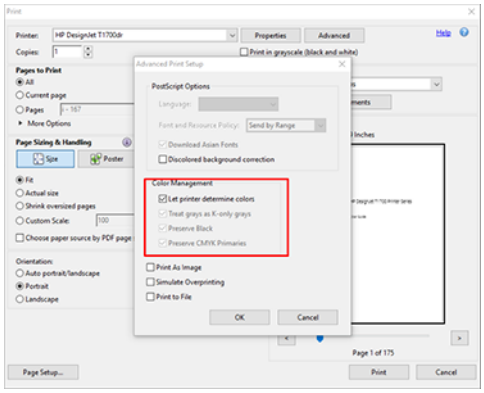

5. If the document contains several color profiles and you are not sure what the result will be, you can flatten the document first and print it as seen on the screen. To do this, check the box **Print As Image** in the Advanced Print Setup dialog box. In this case, the rasterization is performed by Acrobat Reader before calling the driver; whereas, if you do not check this box, the rasterization is performed by the driver. So checking the box may have a visible effect on the look of the printed document.

Using Adobe Acrobat Pro

The following steps provide the complete procedure for this topic.

Acrobat Pro is a professional application that allows full color management. This section briefly describes the options to select a working color space, convert images to a desired color space, and print.

1. PDF files may not contain a color profile. In the absence of a color profile, Acrobat uses a working color space by default. To choose a working color space, first click **Edit** > **Preferences**.

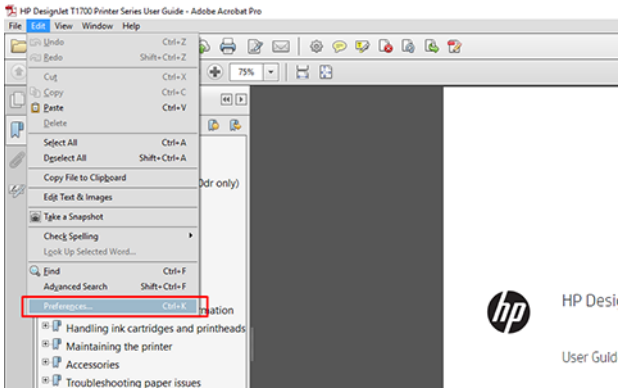

2. In the Preferences dialog box, you can choose RGB, CMYK, and grayscale working color spaces.

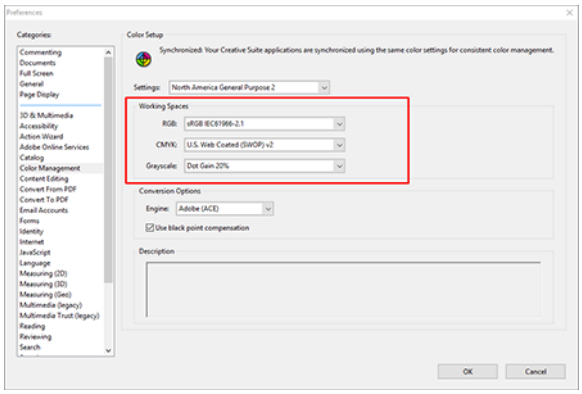

3. PDF files can contain elements with different color profiles. Some may have color profiles, some may not. The working color space will affect only those without a color profile. If you want to attach a specific color profile to the document, you must convert the contents of the document as follows. First, select **Convert Colors** from **View** > **Tools** > **Print Production** or by clicking the icon in the status bar.

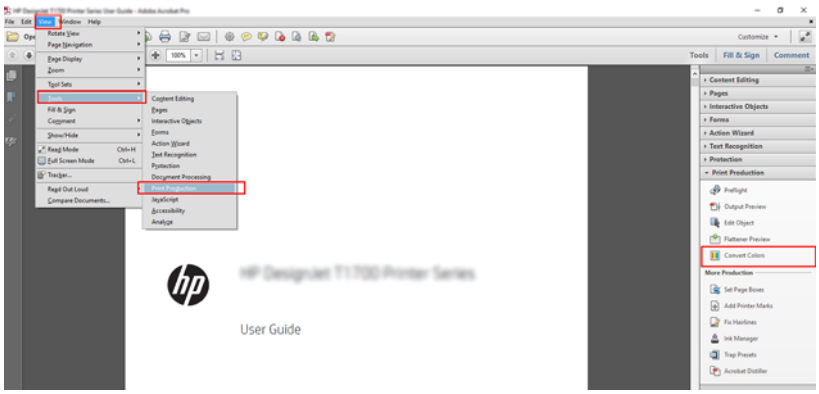

4. Select the elements you want to convert by specifying matching criteria (object type and/or color type) and then the conversion attributes. If you want to change the embedded color profile, you can select **Any Object** and **Any Colorspace** in the Matching Criteria section. In the Conversion Attributes section you can choose, for example, to embed an Adobe RGB (1998) profile by selecting it as the **Conversion Profile**, checking the **Embed** box, clicking the **OK** button, and saving the file to keep the changes. The saved file will have an embedded Adobe RGB color profile.

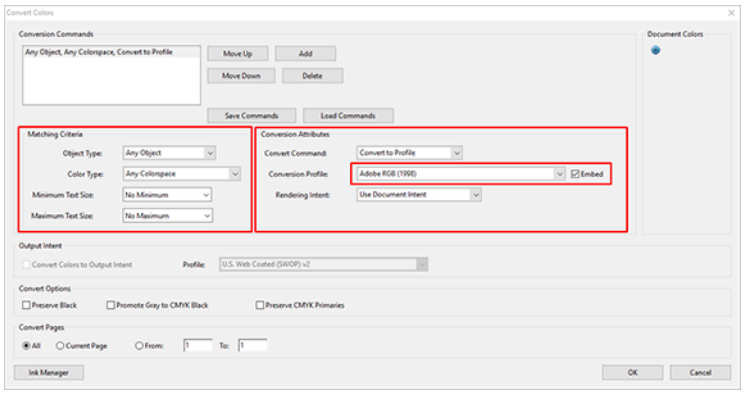

5. To print the document, choose a printer from the Print dialog box, click the **Properties** button, and set the color options in the **Color** tab.

IMPORTANT: Select **Print in color** and **Printer managed colors**.

If you use the V4 driver, you can also select a default color profile, which will be used for any elements that lack a color profile. HP suggests:

- sRGB or Adobe RGB (sRGB is the standard for most files)
- CMYK: Choose Coated FOGRA39 or US Web Coated (SWOP) v2.

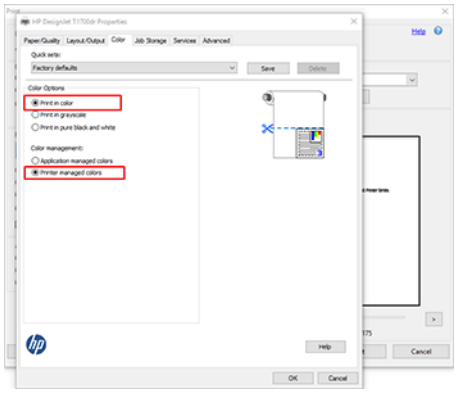

6. If you have a V3 driver, click the **Advanced** button in the Print dialog box, set **Color Handling** to **Printer Color Management**, and click **OK**.

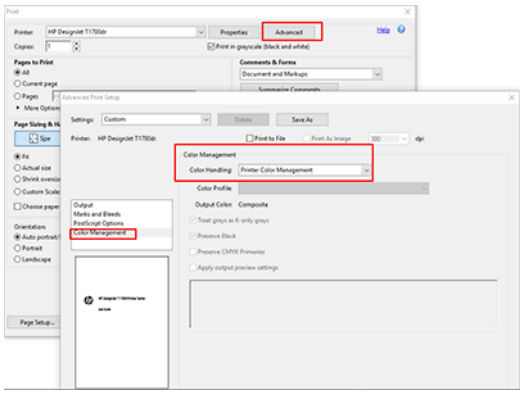

7. In the Print dialog box, click the **Print** button to print the document.

Using Adobe Photoshop

The following steps provide the complete procedure for this topic.

1. In Photoshop, click **File** > **Print**, then select your printer.

2. In the Color Management section, set the Color Handling option to **Printer Manages Colors**.

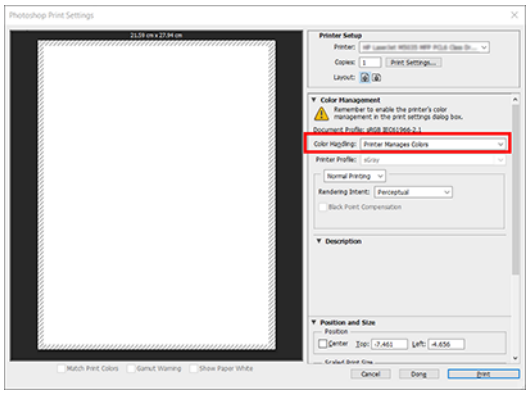

3. In the driver's **Color** tab, ensure that the color management option is **Printer managed colors**. This is the correct option because you have already selected **Printer Manages Colors** in Photoshop.

Print a project

This section demonstrates how to print a project from AutoCAD.

Using Autodesk AutoCAD

The following steps provide the complete procedure for this topic.

1. The AutoCAD window can show a model or layout. Normally a layout is printed rather than the model.

2. Click the Plot icon at the top of the window.

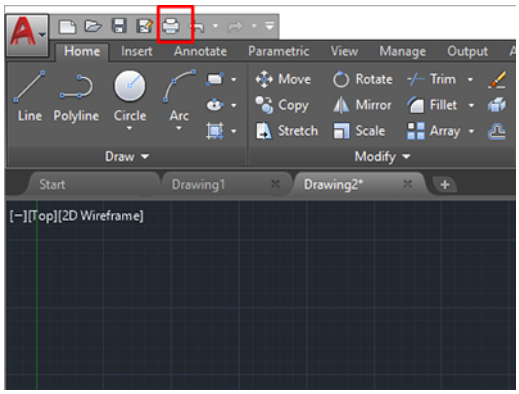

3. The **Plot** window opens.

4. You can see further options by clicking the circular button in the lower right corner of the window.

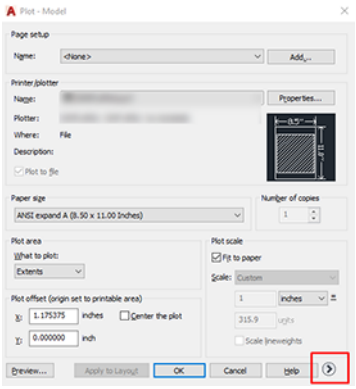

NOTE: The Quality option here does not refer to the final print quality but to the quality of AutoCAD viewport objects that are sent for printing.

5. Select your printer and click the **Properties** button.

6. Select the **Device and Document Settings** tab, and click the **Custom Properties** button.

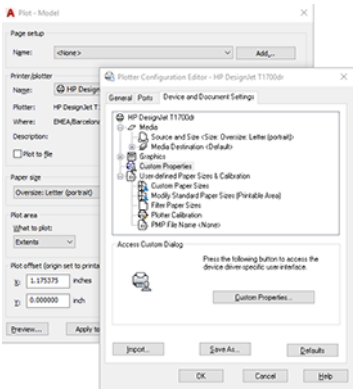

7. In the **Paper/Quality** or **Paper** tab, select the paper type that you intend to use.

NOTE: If you select neither the paper source nor the paper type, the printer will not print on any protected roll (see Protect a paper type on page 86).

8. Select the print quality (your own choice between speed and quality of printing).

9. If you intend to print on roll paper, you must decide where the printer should cut the paper.

   - With a Windows V3 driver: Click the **Paper/Quality** tab, then the Margins/Cutter **Settings** button, and select **Clip content by margins**.

   - With a Windows V4 driver: Click the **Layout** tab; then, in the Layout Mode area, select **With margins** > **Clip content by margins**.

   You can also adjust the crop lines, which indicated where to cut the paper after printing.

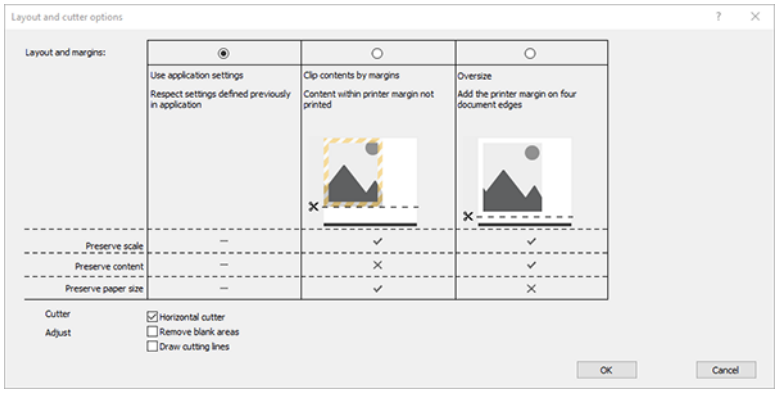

10. Select the **Layout/Output** tab, then select the **Autorotate** option. Autorotation can help to avoid wasting paper.

11. Click the **OK** button and save your configuration changes to a PC3 file.

Using clip contents by margins

You can select this margins option from **Advanced settings** > **Paper** > **Layout/Margins** > **Print with margins** > **Layout** > **Clip contents by margins**.

Use this option when the contents to be printed have white borders and a size equal to that of the paper you have selected. The printer will use the white border for its margins and you will get a page of size equal to that which is selected in the driver.

Print a presentation

This section demonstrates how to print a presentation from AutoCAD and from Photoshop.

Using Autodesk AutoCAD

The following steps provide the complete procedure for this topic.

1. Open the AutoCAD file and select a layout.

2. Click the Plot icon at the top of the window.

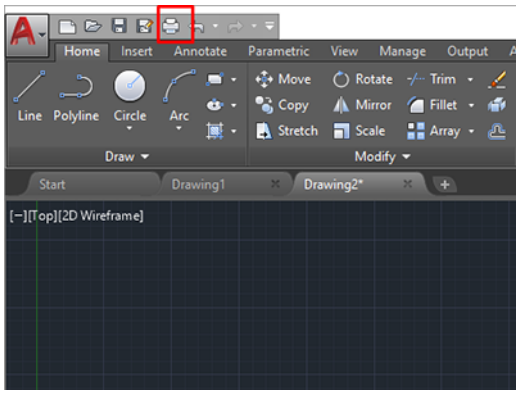

3. Ensure that the correct printer is selected, then click the **Properties** button.

4. Select the **Device and Document Settings** tab, and click the **Custom Properties** button.

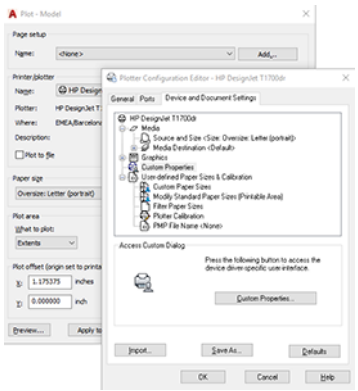

5. In the **Paper/Quality** tab, select the paper type that you intend to use.

NOTE: If you select neither the paper source nor the paper type, the printer will not print on any protected roll (see Protect a paper type on page 86).

6. Select the print quality (your own choice between speed and quality of printing).

7. If you intend to print on roll paper, you must decide where the printer should cut the paper.

   - With a Windows V3 driver: Click the **Paper/Quality** tab, then the Margins/Cutter **Settings** button, and select **Clip content by margins**.

   - With a Windows V4 driver: Click the **Layout** tab; then, in the Layout Mode area, select **With margins** > **Clip content by margins**.

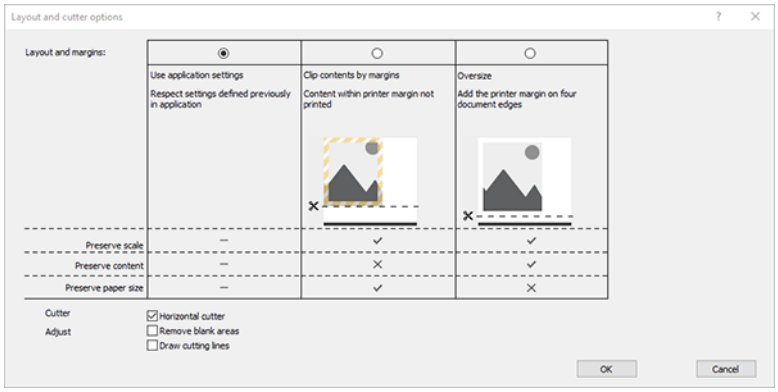

8. Select the **Layout/Output** tab, then select the **Autorotate** option. Autorotation can help to avoid wasting paper.

9. Click the **OK** button and save your configuration changes to a PC3 file.

Using Adobe Photoshop

The following steps provide the complete procedure for this topic.

1. In Photoshop, click **File** > **Print** and then select your printer.

2. Click **Print settings**, then select the **Paper/quality** tab.

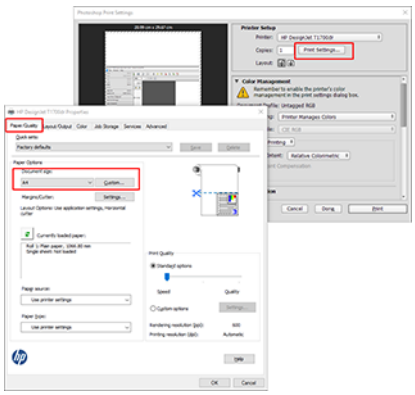

3. Choose from the available paper sizes.

   If you do not find the paper size that you intend to use, click the **Custom** button. Enter the width, the length and the name of your custom paper size. Click the **Save** and **OK** buttons.

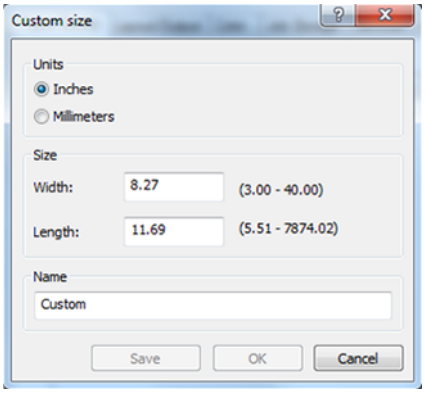

4. Select **Show preview before printing**. You may also wish to change the default paper source, paper type and print quality.

5. In the **Color** tab, the default color management option is **Printer managed colors**, and this is the correct option because you have already selected **Printer Manages Colors** in Photoshop.

Print and scale from Microsoft Office

This section demonstrates how to print and scale from Microsoft Office 2013.

Using Microsoft PowerPoint

The following steps provide the complete procedure for this topic.

1. Click **File** > **Print**, and select the name of your printer.

2. Click **Printer properties** > **Layout/Output** > **Resizing options** to scale the document to a particular size.

3. Select the **Paper/Quality** tab, then select **Paper Source** and **Paper Type**.

4. To clip contents by margins:

   - With a Windows V3 driver: Click the **Paper/Quality** tab, then the Margins/Cutter **Settings** button, and select **Clip content by margins**.

   - With a Windows V4 driver: Click the **Layout** tab; then, in the Layout Mode area, select **With margins** > **Clip content by margins**.

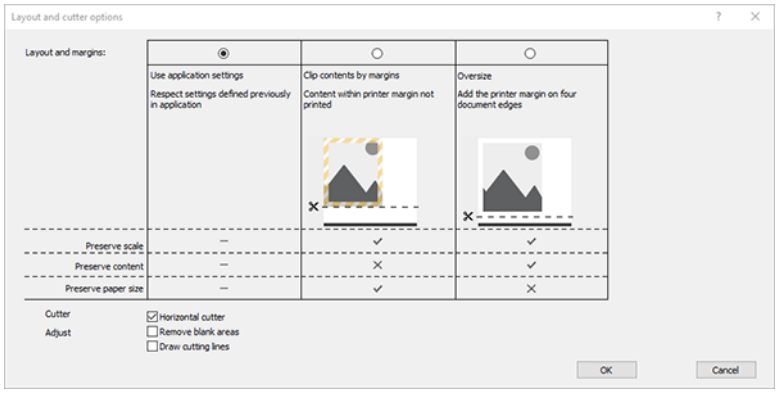

Using Microsoft Project

The following steps provide the complete procedure for this topic.

1. Click **File** > **Print**.

2. Select your printer's name.

3. In the Settings section, you can choose the pages to print, the orientation, and the paper size.

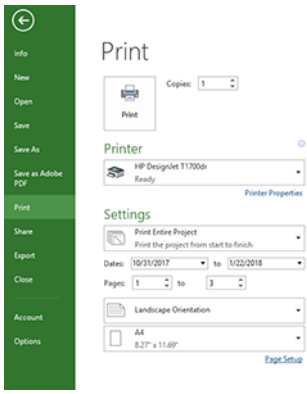

4. Click **Page Setup** to choose the **Paper Size** you want.

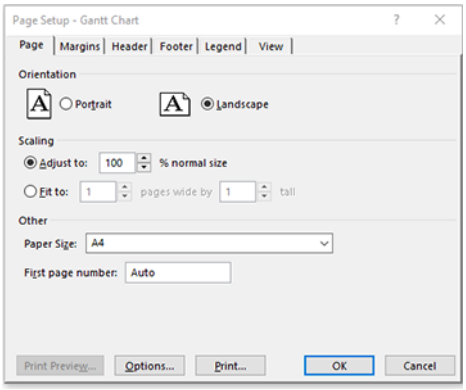

5. Select **Options** to go to the printer driver.

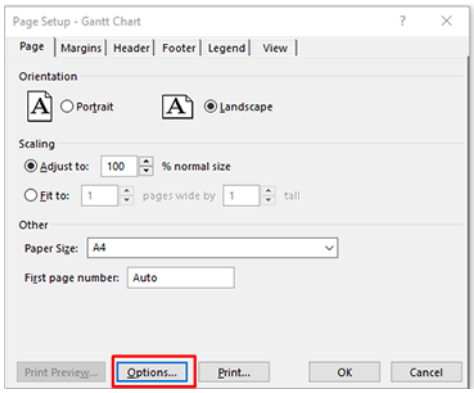

The default options in the **Paper/Quality** tab are probably suitable: **Paper source**: **Use printer settings** and **Paper Type**: **Use Printer Settings**.

6. Click **Layout/Output** > **Resizing options** to scale the document to a particular size. Alternatively, you can scale the document in Project.

Using Microsoft Excel

The following steps provide the complete procedure for this topic.

1. Click **File** > **Print**. Select your printer's name, then click the back arrow to leave the **File** menu.

2. Select the **Page Layout** tab, then **Size**, and choose the paper size you want.

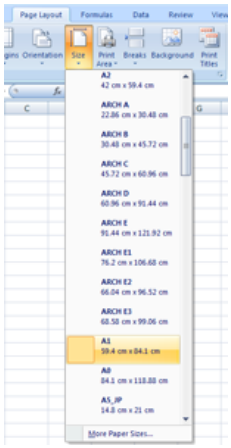

3. Click **File** > **Print** > **Printer properties** to go to the printer driver. In the **Paper/Quality** tab, select **Paper source**, **Paper Type** and **Print Quality**.

4. Click **Layout/Output** > **Resizing options** to scale the document to a particular size. Alternatively, you can scale the document in Excel.

11 Retrieving printer usage information

The following sections provide details for this topic.

Get printer accounting information

This topic explains the concepts involved in this subject.

There are different ways of getting accounting information from your printer.

- View printer usage statistics for the whole lifetime of the printer, see Check usage statistics on page 159.
- View ink and paper usage for each of your recent jobs, see Check usage statistics for a job on page 161.
- Use a third-party application to request printer status, printer usage or job accounting data from the printer through the Internet. The printer provides data in XML to the application whenever requested. HP provides a Software Development Kit to facilitate the development of such applications.

Check usage statistics

The following sections provide details for this topic.

Check usage from the front panel

Tap 127 on the front panel to display the usage information.

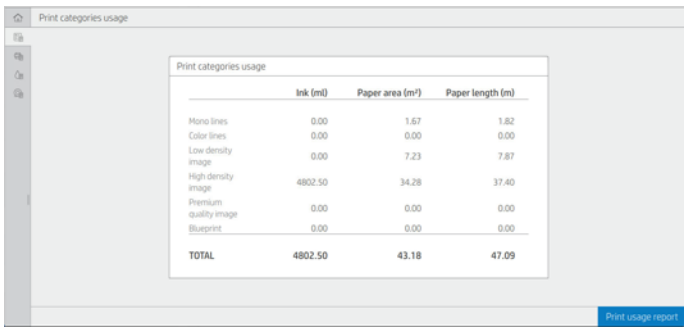

The following information can be retrieved:

- In the tab **Print categories usage**, you can see the ink, paper area, and paper length usage divided into categories:
  - Mono lines: Between 0% and 10% of non-white pixel coverage, printed on standard paper, with less than 1% of color pixel coverage
  - Color lines: Between 0% and 10% of non-white pixel coverage, printed on standard paper, with more than 1% of color pixel coverage
  - Low density image: Between 10% and 50% of non-white pixel coverage printed on standard paper
  - High density image: Over 50% of non-white pixel coverage printed on standard paper
  - Premium quality image: Any content type printed on premium paper
  - Blueprint: Any content type printed on blueprint paper
- Scan usage: The copy and scan usage in m², and the total amount:

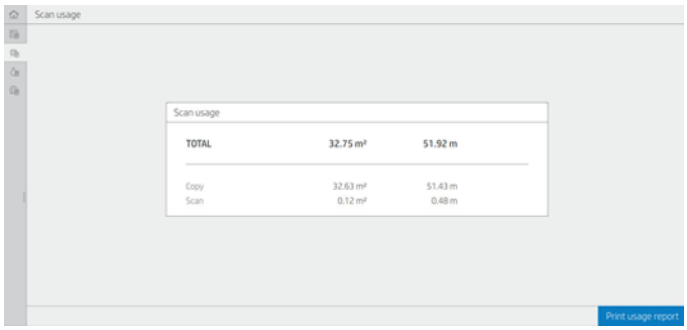

- Ink usage: The ink consumed by each cartridge in ml, and the total amount of ink consumed.

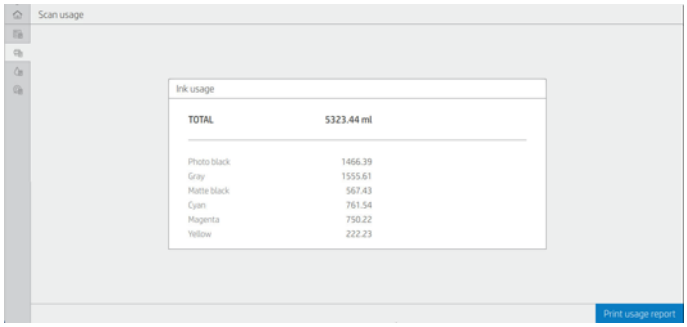

- Paper usage: Amount of paper used and the total at the top, divided into paper categories or families.

  Usage can be seen at each level.

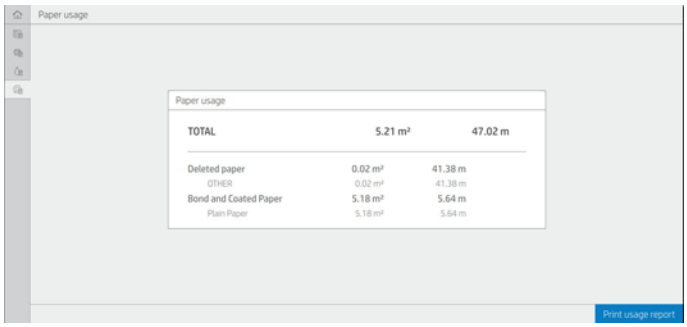

When you tap the **Print usage report** button, a message is displayed: **The usage report was sent to the job queue and will be printed soon.**

All the values can be displayed in English or metric units.

Print the usage information

There are two different ways to print the usage information from the front panel's home screen:

- Tap 1 2 7 to launch the usage information screen, then tap the **Print usage report** button.
- Tap ⚙, then **Internal prints** > **User information prints** > **Print usage report**.

Check usage from the Embedded Web Server

The same information can be retrieved from the Embedded Web Server as from the front panel.

1. Access the Embedded Web Server, see Embedded Web Server on page 14.
2. In the menu at the side, click **Usage**.

The usage page shows all the printer usage information separated into various tables:

- **Summary**: The total ink usage and the total paper usage (in units of area and length).
- **Print categories usage**: The ink and paper usage and the number or pages printed for the different print categories (content type, such as mono lines, color lines, premium quality image, blueprint paper). This table information is shown only if the **Show application categories** printer setting is enabled. There are further conditions depending on the following settings:

- The paper printed usage is shown if the **Paper area used and paper area printed** setting is enabled.
- The blueprint category is shown if the **Enable the blueprint category** setting is enabled.
- The premium quality image category is only shown if the **Enable the premium quality image category** setting is enabled.
- If the printed-paper column information is shown, the paper area used field changes the string to "Paper area (m^2 used)". Otherwise, the string shown is "Paper area (m^2)".

- **Ink usage**: The ink usage for the whole life of the printer (with approximate values). The ink consumption table lists the ink consumed in each color, ignoring the product number of the cartridge.
- **Paper usage**: All the papers that have been used throughout the life of the printer.

Check usage statistics for a job

The following steps provide the complete procedure for this topic.

NOTE: The accuracy of the usage statistics is not guaranteed.

1. Access the Embedded Web Server, see Embedded Web Server on page 14.
2. In the menu at the side, click **Usage** > **Accounting**.

The accounting page shows a table of the latest printed jobs, with the following information per job (not per page):

- **Name**: The name of the job

  The job name is shown only if the **Show user name and job name in job accounting** setting is enabled for users under **Security** > **Security settings**.

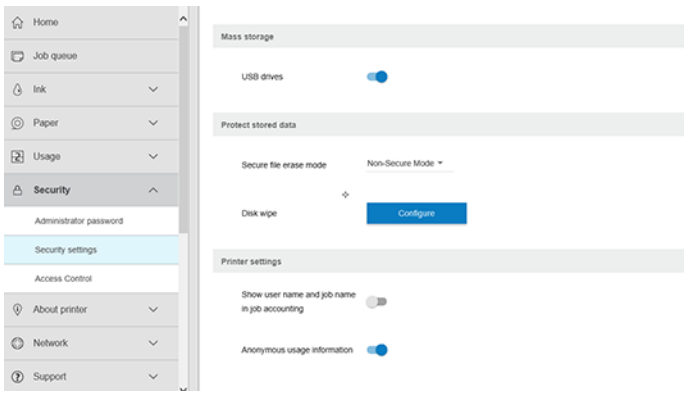

- **Number**: The number of the job
- **Time**: The date and time when the job was completed
- **User**: The name entered by the person who submitted the job (this item is present only if the corresponding security setting is enabled)

  The user name is shown only if the **Show user name and job name in job accounting** setting is enabled for users under **Security** > **Security settings**.

- **Type**: The type of job (print)
- **Source**: The source of the job: USB, network, and so on
- **Print quality**: The print quality used to print the job
- **Copies**: The number of copies requested (cumulative after reprints)
- **Pages**: The number of pages completed
- **Status**: The status of the job: printed, canceled by user, and so on
- **Total cost**: The total cost of the job (visible if cost assignment is enabled)
- **Paper type**: The paper type used for the job
- **Paper area**: The used paper area of the job
- **Paper length**: The used paper length of the job
- **Ink used**: The volume of ink consumed by the job

A job is considered completed when all its pages have been printed, or canceled by the user, or canceled by the printer itself. An ongoing job (waiting for printing, being printed, being canceled, on hold for preview, and so on) will not appear on this list.

You can filter the jobs shown on the accounting page by using a drop-down control available on the same page. This control just changes the view, the job accounting information is not deleted in the printer. Essentially, this page will report the last N jobs (or fewer if there are not enough completed jobs), where N is the value of this configuration parameter. By default, N is 10.

Two buttons appear in the accounting table:

- **Help**: This button opens a window displaying help information.
- **Export to CSV**: This button opens a window with a progress bar, and generates and downloads a CSV file. The downloaded file contains similar information to the accounting page, in CSV format. If the cost assignment is enabled, the CSV displays more detailed information about the cost of the job.

Check cost assignment

The following steps provide the complete procedure for this topic.

NOTE: The accuracy of the usage statistics is not guaranteed.

1. Access the Embedded Web Server, see Embedded Web Server on page 14.
2. Go to the **Main** tab.
3. Click **Usage** > **Cost assignment configuration**.

The cost assignment page allows you to enable or disable the cost assignment setting, using the checkbox next to **Enable accounting assignment configuration** at the top of the page. If the setting is enabled, you can insert or modify the cost of the following sections.

NOTE: At least one of these sections must be enabled in order to save the configuration.

- **Units**

  - **Currency**: Enter any three-letter currency code.
  - **Paper usage**: Select the units, English or metric.

- **Print categories cost**: Can be enabled or disabled. When enabled, you can assign a cost to each category, and select the units of the cost (per millimeter, or the option selected in the previous **Units** section). The cost is a number with two decimal digits of precision. Disabled categories are displayed grayed out.
- **Ink usage cost**: Can be enabled or disabled. Allows you to apply a cost to ink usage, and displays the available inks with a field to indicate the cost.
- **Paper usage cost**: Can be enabled or disabled. Allows you to apply a cost to the papers displayed. You can add papers from the list of supported papers. The costs can be removed or edited; they cannot be empty, but may be 0 (zero). The units selection is the same as for print categories.
- **Fixed cost**: Can be enabled or disabled. Allows you to add a fixed cost to all print, scan, and copy jobs.

Enabling the cost assignment setting causes the total cost column to appear in the accounting information, and detailed information is added to the exported CSV.

12 Handling ink cartridges and printhead

The following sections provide details for this topic.

About the ink cartridges

Ink cartridges store the ink and are connected to the printhead, which distributes the ink on the paper.

To purchase additional cartridges, see Supplies and accessories on page 188.

⚠ **CAUTION:** Observe precautions when handling ink cartridges because they are ESD-sensitive devices (see the Glossary on page 244). Avoid touching pins, leads and circuitry.

Check the ink cartridges status

To get more information on your ink cartridges, you can press the color of the cartridge on which you want information.

To view the ink levels of your ink cartridges, tap , then tap the cartridge that you want information on.

There is a **Replace ink cartridges** option on the ink information page in case you want to do so (see also Remove an ink cartridge on page 165).

You can also get this information from the HP Utility or Embedded Web Server.

For an explanation of the ink cartridge status messages, see Ink cartridge status messages on page 226.

HP Utility procedure

This topic explains the concepts involved in this subject.

- In the HP DesignJet Utility for Windows, go to the **Overview** tab, each cartridge's status is under **Supplies Status** > **Cartridges**.
- In the HP Utility for Mac OS X, select **Supplies Status** in the Information group.

Remove an ink cartridge

The following steps provide the complete procedure for this topic.

There are three occasions when you need to remove an ink cartridge.

- The ink cartridge is very low and you want to replace it with a full cartridge for unattended printing (you can use up the remaining ink in the first cartridge at a more convenient time).
- The ink cartridge is empty or faulty, and you must replace it to continue printing.
- You want to replace the printhead, and there is not enough ink left in the ink cartridge to complete the printhead replacement process. In this case, if the cartridge is not empty you can use it again later.

CAUTION: Do not try to remove an ink cartridge while printing.

CAUTION: Remove an ink cartridge only if you are ready to insert another one.

CAUTION: Make sure the printer wheels are locked (the brake lever is pressed down) to prevent the printer from moving.

NOTE: When a cartridge runs out of ink, the current job is not automatically cancelled: unless you cancel it manually, it will resume printing when the empty cartridge has been replaced. If there is a delay in replacing the cartridge, you may see some banding on the print.

1. From the front panel, press , then **Replace**.

2. Open the ink cartridge cover on the left- or right-hand side of the printer.

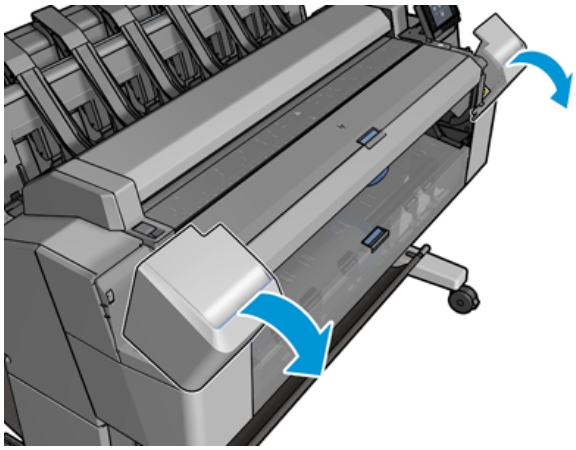

3. Grip the cartridge you wish to remove.

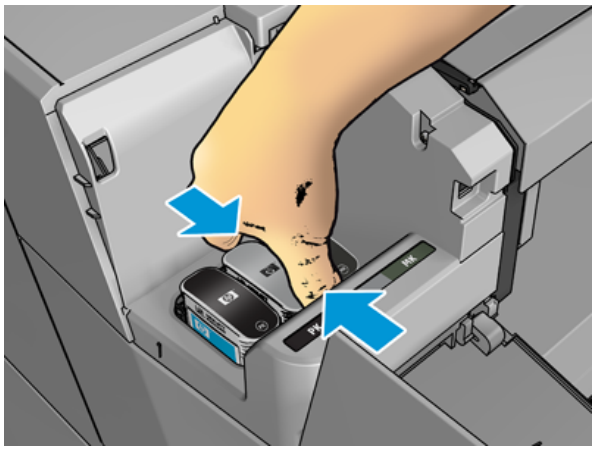

4. Pull the cartridge straight up.

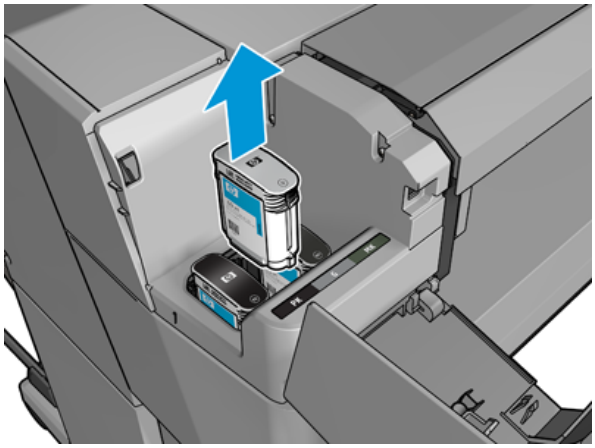

NOTE: Avoid touching the end of the cartridge that is inserted into the printer, as there may be ink on the connection.

NOTE: Avoid storing partially used ink cartridges.

5. The front-panel display identifies the missing ink cartridge.

Insert an ink cartridge

The following steps provide the complete procedure for this topic.

1. Before removing the cartridge from its wrapping, shake it vigorously.

2. Unwrap the new ink cartridge, find the label identifying the ink color. Check that the letter or letters (in these illustrations, M for magenta) marking the empty slot, matches the letter or letters on the cartridge label.

3. Insert the ink cartridge into its slot: photo black, gray, and matte black on the left; cyan, magenta, and yellow on the right.

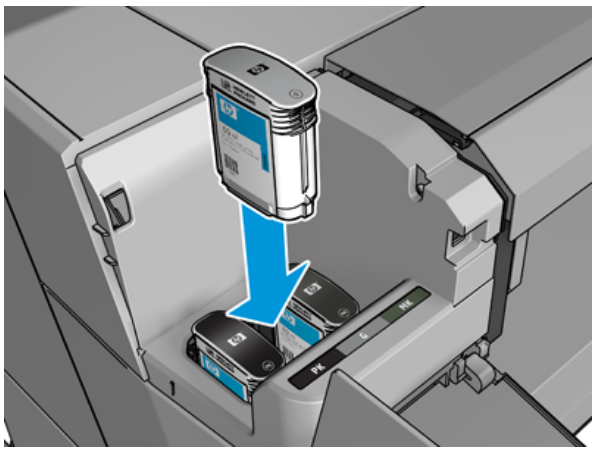

4. Push the cartridge into the slot until it snaps into position. You should hear a beep and see confirmation that the cartridge has been inserted.

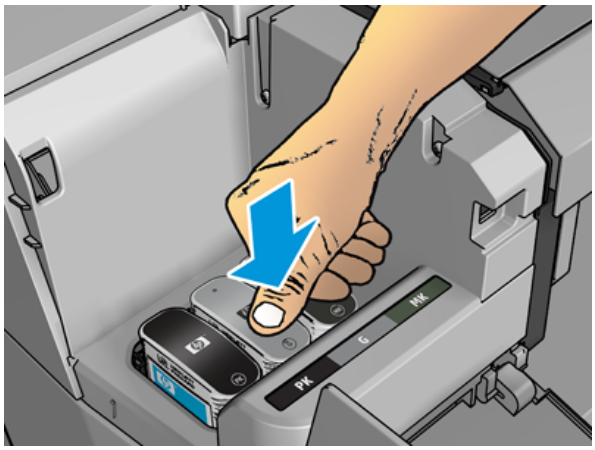

If you have difficulty, see Cannot insert an ink cartridge on page 226.

5. When all cartridges have been inserted, close the cover.

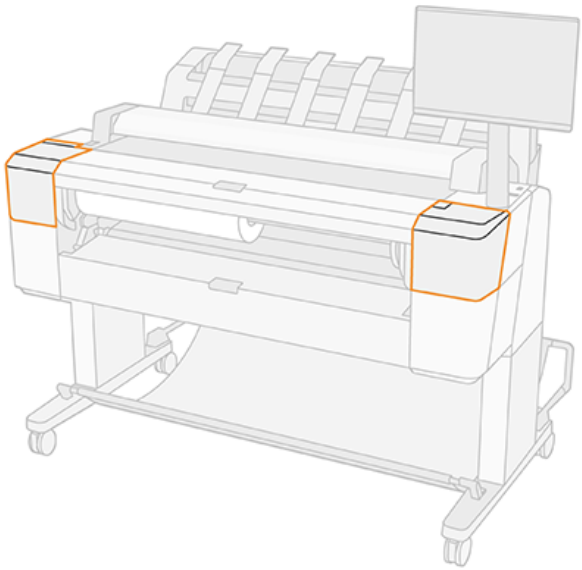

6. The front-panel display confirms that all cartridges have been correctly inserted.

Although it is possible to use non-HP ink cartridges, this choice has several serious disadvantages. It may not be possible to determine with enough accuracy the ink level or status of used, refilled, or counterfeit ink cartridges. Any service or repair required as a result is not covered under the warranty. System ink flushing, color calibration, and printhead alignment are recommended. If you experience print-quality problems, HP recommends changing to Original HP inks.

About the printhead

The printhead is connected to the ink cartridges and jets ink onto the paper.

⚠ **CAUTION:** Observe precautions when handling the printhead because it is an ESD-sensitive device (see the Glossary on page 244). Avoid touching pins, leads, and circuitry.

Check the printhead status

The following steps provide the complete procedure for this topic.

The printer automatically checks and services the printhead after each print. Follow the steps below to get more information on your printhead.

1. From the front panel, tap , then , then tap the printhead that you want information on.
2. The front panel displays:
   - Colors
   - Product name
   - Product number
   - Serial number
   - Status, see Front-panel error messages on page 233
   - Volume of ink it has used
   - Warranty status

You can also get some of this information from the HP Utility.

For an explanation of the printhead status messages, see Printhead status messages on page 228.

If the warranty status is **See warranty note**, this indicates that expired ink is being used. If the warranty status is **Out of warranty**, this indicates that non-HP ink is being used. See the limited warranty document provided with your printer for details of the warranty implications.

Remove the printhead

The following steps provide the complete procedure for this topic.

⚠ **CAUTION:** Make sure the printer wheels are locked (the brake lever is pressed down) to prevent the printer from moving.

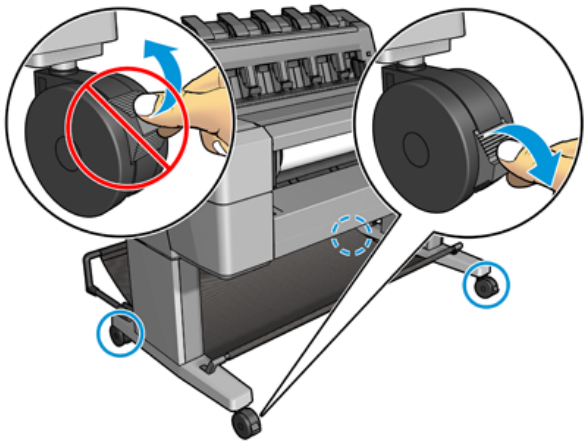

CAUTION: Printhead replacement must be performed with the printer powered on.

1. From the front panel, press , then , then **Replace**.

   The front panel may ask whether the replacement printhead is new or used.

   NOTE: You can cancel the process at any time by pressing .

2. The carriage moves automatically to the left side of the printer.

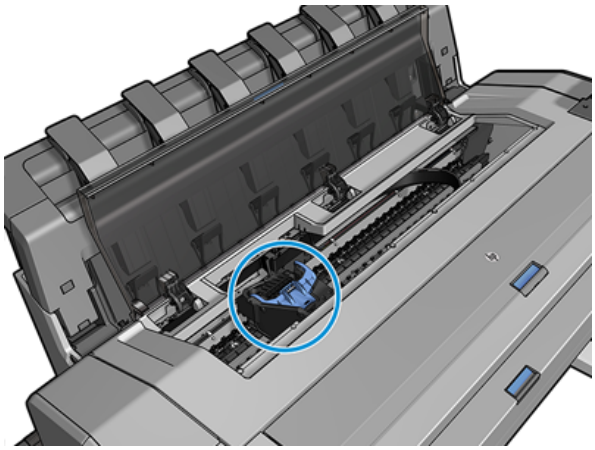

CAUTION: If the carriage is left in the removal position for more than three minutes without inserting or removing the printhead, it tries to move back to its normal position in the right-hand end.

3. The front panel asks you to lift the scanner.

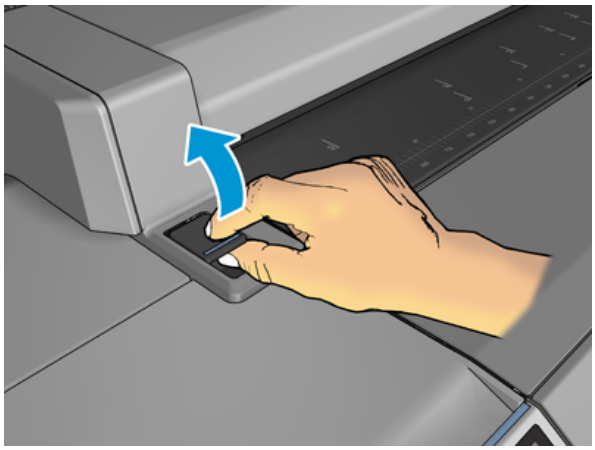

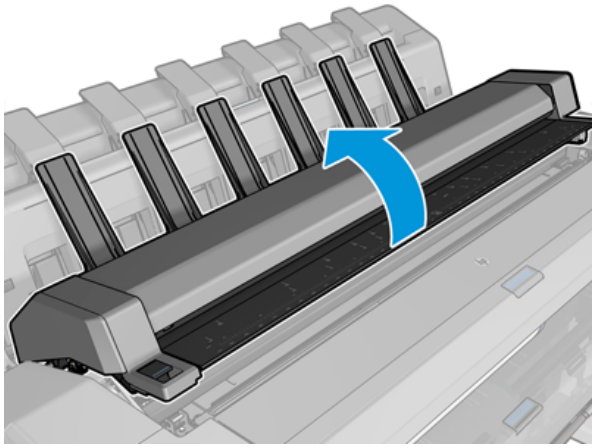

4. Locate the printhead carriage.

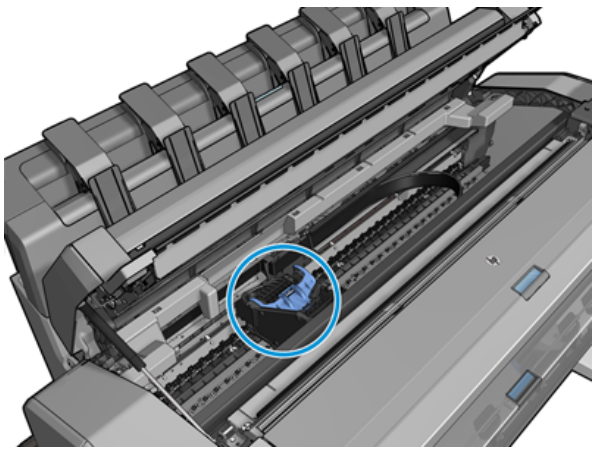

5. Raise the blue printhead cover.

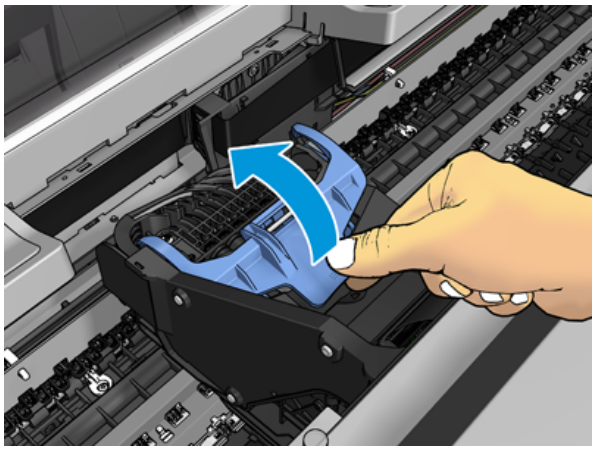

6. Pull the blue cover back towards you, raising the black piece to which it is attached.

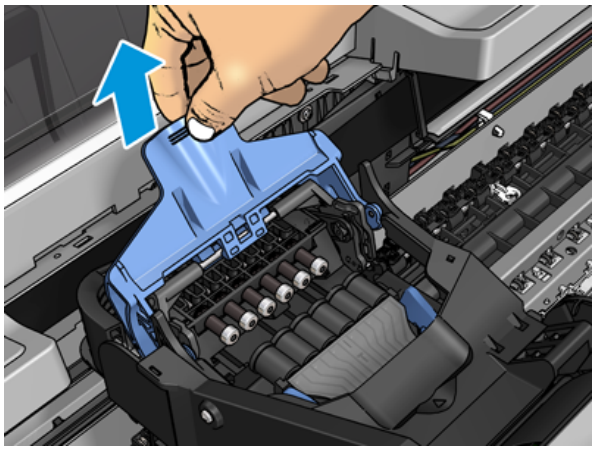

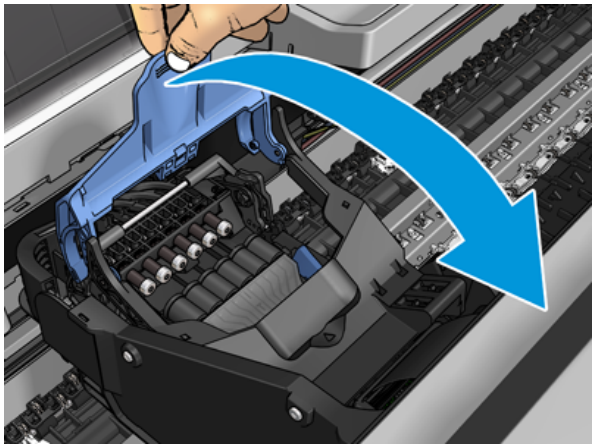

7. Leave the black piece approximately vertical.

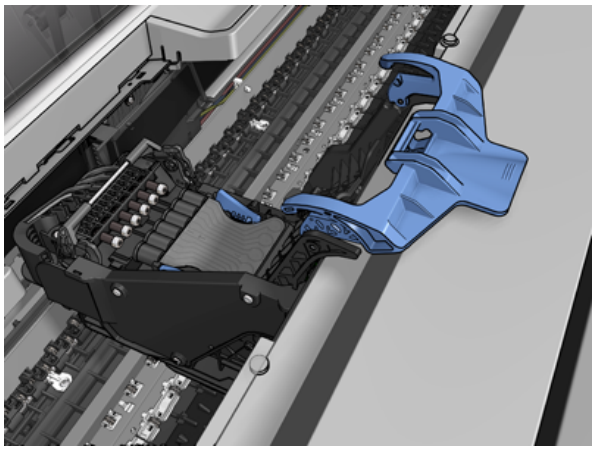

8. Grasp the printhead by the blue pieces on each side.

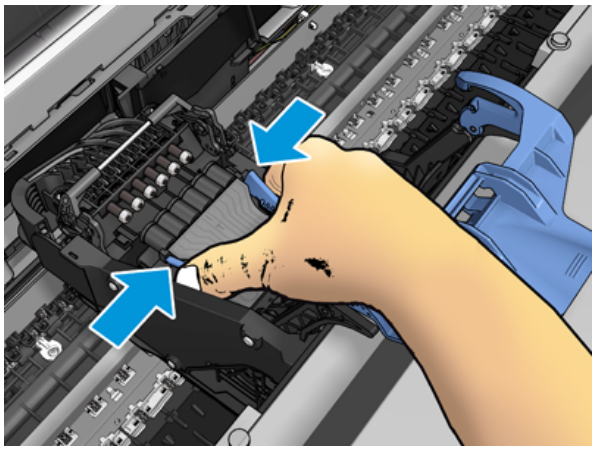

9. Lift the printhead out of the carriage.

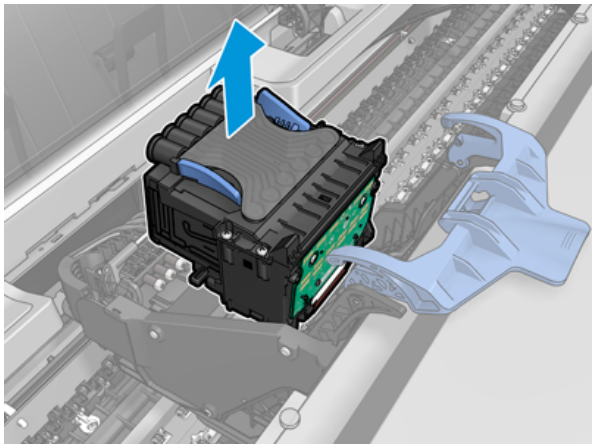

Insert the printhead

The following steps provide the complete procedure for this topic.

NOTE: You cannot insert a new printhead successfully if a connected ink cartridge has not enough ink to complete the printhead replacement process. In this case, you should replace the ink cartridge before inserting the new printhead. You can use the old cartridge later if it still contains some ink.

1. Insert the new printhead.

   CAUTION: Insert the printhead slowly and vertically, straight down. It may be damaged if you insert it too fast, or at an angle, or if you rotate it as you insert it.

   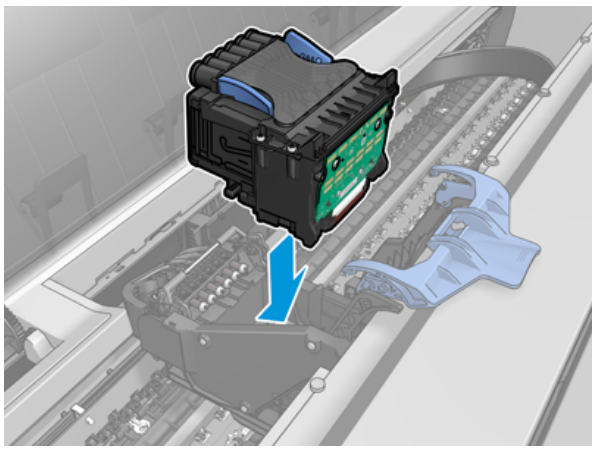

2. Check that the printhead is correctly aligned with its ink connectors.

   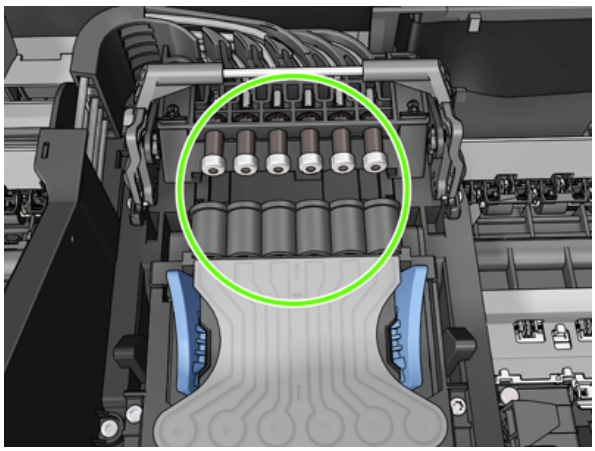

3. Lower the black piece over the printhead.

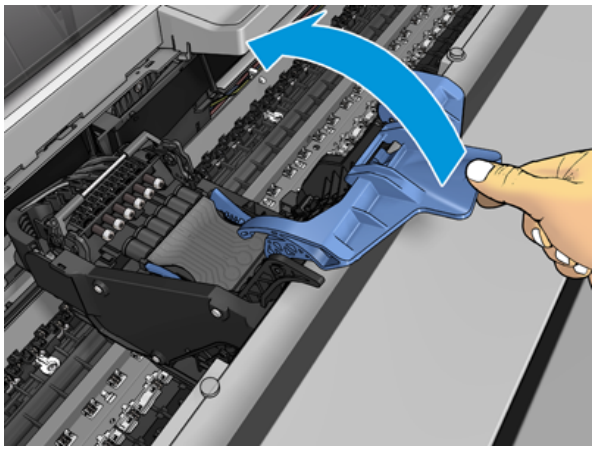

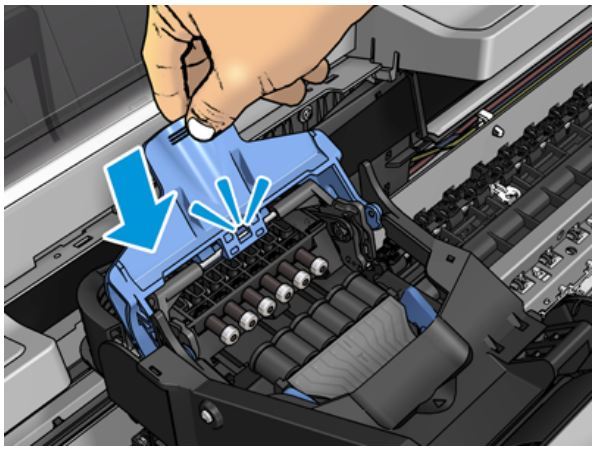

4. Close the blue cover and make sure that it is properly closed.

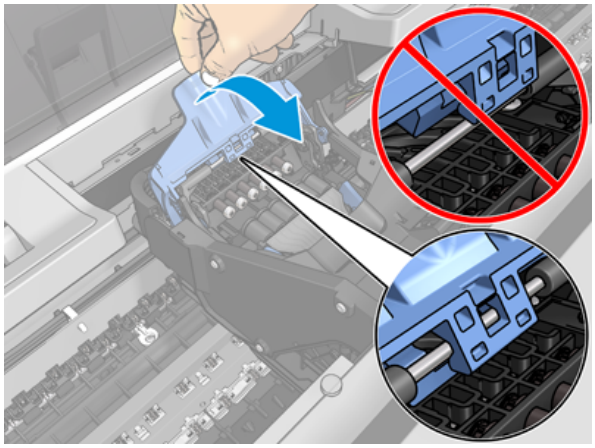

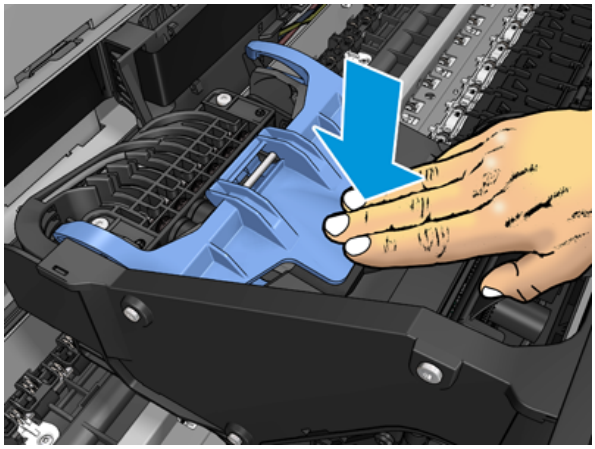

When the printhead has been inserted correctly and is accepted by the printer, the printer beeps.

NOTE: If the printer does not beep when you insert the printhead and the **Replace** message appears on the front-panel display, the printhead may need to be reinserted.

5. Lower the scanner.

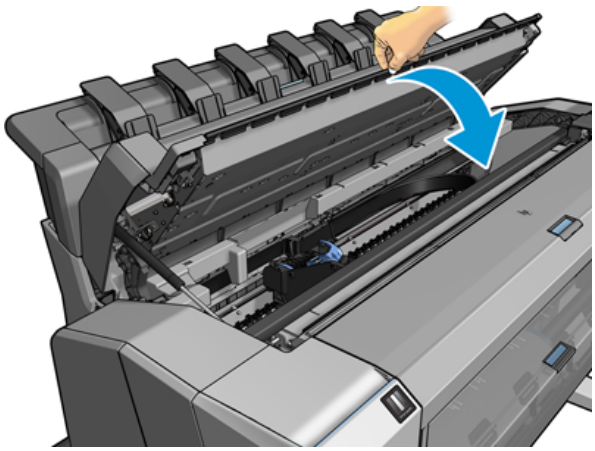

6. The front-panel display confirms that the printhead is correctly inserted. The printer starts checking and preparing the printhead. The default routine process takes 10 minutes. If the printer finds problems in preparing the printhead, it takes longer, up to 45 minutes. After the printhead is checked and prepared, the printhead realignment procedure runs automatically if paper is loaded, see Align the printhead on page 228.

7. You are recommended to perform a color calibration after inserting a new printhead. See Color calibration on page 134.

Storage of anonymous usage information

Each ink cartridge contains a memory chip that assists in the operation of the printer. In addition, this memory chip stores a limited set of anonymous information about the usage of the printer, which can include the following: the date when the cartridge was first installed, the date when the cartridge was last used, the number of prints printed using the cartridge, the print coverage, the frequency of printing, the printing modes used, any printing errors that may have occurred, and the product model. This information helps HP to design future products to meet our customers' printing needs.

The information collected by the memory chip does not include information that could be used to identify a customer or user of the cartridge or printer.

HP collects a sample of the memory chips from ink cartridges returned to HP's free return and recycling program (HP Planet Partners: http://www.hp.com/recycle). The sampled memory chips are read and studied in order to improve future HP products.

HP partners who assist in recycling ink cartridges may also have access to the information. Any third party possessing the cartridge may be able to access the anonymous information on the memory chip.

If you are concerned about providing this anonymous information, you can tell the printer not to store the information in the memory chip. To do so, access the Embedded Web Server, and select **Security** > **Security Settings**, then in the **Printer Settings** section toggle to **Anonymous usage information**. This does not prevent the cartridge from working normally in other respects. However, if you change your mind later, you can restore the factory defaults to resume collecting printer usage information.

Safe mode

Under certain conditions, including printer operation outside of environmental specifications, and when a used, refilled, or counterfeit ink cartridge has been detected, the printer will operate in safe mode. HP is unable to warrant the performance of the printing system when operated outside of environmental specifications or when a used, refilled, or counterfeit ink cartridge is installed. Safe mode is designed to protect the printer and the printheads from damage due to unexpected conditions, and is in operation when the icon is displayed on the printer's front panel and by the Embedded Web Server and HP Utility.

For optimal performance, use original HP ink cartridges. HP DesignJet printing systems, including original HP inks and printheads, are designed and engineered together to provide uncompromising print quality, consistency, performance, durability, and value—with every print.

NOTE: This printer is not designed to use continuous ink systems. To resume printing, remove the continuous ink system and install genuine HP (or compatible) cartridges.

NOTE: This printer is designed for ink cartridges to be used until they are empty. Refilling cartridges prior to depletion might cause your printer to fail. If this happens, insert a new cartridge (either genuine HP or compatible) to continue printing.

NOTE: Dynamic security enabled printer. Only intended to be used with cartridges using an HP original chip. Cartridges using a non-HP chip may not work, and those that work today may not work in the future. More at: http://www.hp.com/go/learnaboutsupplies.

13 Printer maintenance

The following sections provide details for this topic.

Check printer status

You can check the current status of the printer in various ways:

- If you access the Embedded Web Server, you see information about the general status of the printer. The Supplies page in the **Main** tab describes the status of the paper and ink supplies.
- The front panel has three top-level screens that you can move between by sliding your finger across. The main screen provides direct access to the main printer functions. Swipe left to the widget page and see the status of ink, paper supplies, and the job queue.

  If there are any current alerts, the upper row of the home screen shows the top-priority alert. Swipe down the dashboard to access the **Status Center** and take action.
- If you start the HP Utility and select your printer, you see a page of information describing the status of the printer and its paper and ink supplies.

Clean the exterior of the printer

Clean the outside of the printer and all other parts of the printer that you regularly touch as part of normal operation with a damp sponge or a soft cloth and a mild household cleaner such as non-abrasive liquid soap.

⚠ **WARNING!** To avoid an electric shock, make sure that the printer is turned off and unplugged before you clean it. Do not let water get inside the printer.

⚠ **CAUTION:** Do not use abrasive cleaners on the printer.

Maintain the ink cartridges

During the normal lifetime of a cartridge, no specific maintenance is required. However, in order to maintain the best print quality, replace a cartridge when it reaches its expiration date. The printer's front panel notifies you when any cartridge reaches its expiration date.

You can also check a cartridge's expiration date at any time: see .

See also Handling ink cartridges and printhead on page 164.

Move or store the printer

If you need to move or store the printer, prepare it correctly to avoid possible damage to it. To prepare the printer, follow the instructions below.

Procedure

The following steps provide the complete procedure for this topic.

1. Do not remove the ink cartridges or printhead.
2. Make sure that no paper is loaded.
3. Make sure that the printer is idle.
4. Disconnect any cables connecting the printer to a network or a computer.
5. If the stacker seems likely to impede the movement of the printer through doorways, you can fold it out of the way by removing two screws.

Printer turned off for a long time

The following steps provide the complete procedure for this topic.

If you need to leave the printer turned off for a long time, follow the additional steps below.

1. Turn off the power using the Power key on the front panel.
2. Disconnect the printer's power cable.

CAUTION: If you turn the printer upside down, ink could escape into the printer and cause serious damage.

When reconnecting the power cable, remember to route the cable tidily along the back gutter.

When the printer is turned back on, it takes about three minutes to initialize itself and to check and prepare the printhead. Preparing the printhead normally takes just over a minute. However, if the printer has been off for a six weeks or more, preparing the printhead could take up to 45 minutes.

CAUTION: If the printer remains off for a long period of time, the printhead may become unusable. In this case, you need to replace the printhead.

TIP: Because preparing and purging the printhead uses both time and ink, you are strongly recommended to leave the printer always on or in sleep mode, whenever possible, to maintain the health of the printhead. In both cases, the printer wakes up from time to time to maintain the printhead. Thus, you can avoid going through lengthy preparation processes before using your printer.

Update the firmware

The printer's various functions are controlled by firmware that resides in the printer.

From time to time firmware updates will be available from HP. These updates increase the printer's functionality, enhance its features, and may correct minor problems.

IMPORTANT: You are strongly recommended to update the firmware periodically in order to take advantage of the latest developments.

There are various ways of downloading and installing firmware updates; you can choose whichever you find most convenient. They can be divided into two categories: automatic and manual updates.

Automatic firmware updates

Automatic firmware updates are a convenience that is possible with Web-connected printers. Your printer can automatically download the latest firmware release and install it for you.

Important notes

- Your printer must be connected to the Internet; see Set up printer services on page 20.
- To configure automatic firmware updates, you can use the front panel or the Embedded Web Server; see Set up printer services on page 20.
- If an administrator password has been set, it will be required to change these settings.
- A firmware update package can be large; you may want to consider whether there are any implications for your network or Internet connection.
- A firmware update is downloaded in the background: the printer can be printing at the same time. However, it cannot be installed in the background: printing must stop.

Manual firmware updates

Manual firmware updates can be performed in the following ways:

- Using the Embedded Web Server, select the **About Printer** tab and then **Manual Firmware Update**. If new firmware is available, some information about the new firmware is displayed, and you are given the opportunity to download and install it.
- Using the HP DesignJet Utility under Windows, select the **Admin** tab and then **Launch Firmware Update**.
- Using HP Web Jetadmin, with which you can make manual firmware updates or request automatic updates.
- Using a USB flash drive. Download the firmware file from http://www.hp.com/go/DesignJetT2600/drivers into the USB flash drive and insert it into the Hi-Speed USB host port in the front panel. A firmware update assistant will appear on the front panel to guide you through the update process.

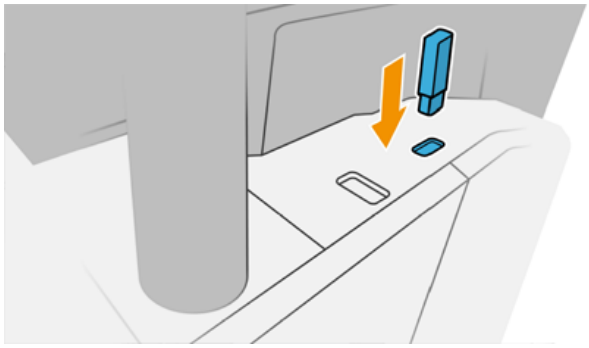

Update the software

To update printer drivers and other software for your printer.

Go to http://www.hp.com/go/DesignJetT2600/drivers.

- Under Windows, HP Software Update regularly offers to update your software automatically, and the HP DesignJet Utility may offer you automatic updates when restarted.
- Under Mac OS X, Apple SW Update offers you software updates when available.

Printer maintenance kits

Two maintenance kits are available for your printer, containing components that may need to be replaced after long use. When one of them is needed, a message is displayed on the front panel and by the HP Utility.

When you see the message, you should contact HP Support (see Contact HP Support on page 238) and request the maintenance kit. The kits are installed by service engineers only.

Secure File Erase

The printer's hard disk is used as a temporary storage area for print jobs.

Secure File Erase can erase your temporary files from the hard disk to protect them from unauthorized access. It begins to do so as soon as you turn it on, but old temporary files that were already on the hard disk are not erased retroactively. If you want to erase the old files too, see Disk Wipe on page 182.

Secure File Erase provides three different levels of security:

- **Non-Secure:** all pointers to the information are erased. The information itself remains on the hard disk until the disk space it occupies is needed for other purposes, and it is then overwritten. While it remains on the disk, it is difficult for most people to access, but may be accessed using software designed for the purpose. This is the normal method in which files are erased on most computer systems; it is the fastest method but the least secure.
- **Secure Fast Erase (1 pass):** all pointers to the information are erased, and the information itself is also overwritten with a fixed character pattern. This method is slower than Non-Secure, but more secure. It may still be possible to access fragments of the erased information by using special tools to detect residual magnetic traces.

- **Secure Sanitizing Erase (5 passes):** all pointers to the information are erased, and the information itself is repetitively overwritten using an algorithm designed to eliminate any residual traces. This is the slowest method, but the most secure. Secure Sanitizing Erase meets the US Department of Defense 5220-22.m requirements for clearing and sanitization of disk media. This is the default security level when using Secure File Erase.

While files are being erased, the printer's performance may be affected.

Secure File Erase is one of the facilities provided by Web JetAdmin, which is HP's free Web-based print management software: see http://www.hp.com/go/webjetadmin.

If you have difficulty in using Secure File Erase from Web JetAdmin, please contact HP Support: see Contact HP Support on page 238.

The Secure File Erase configuration can be changed from Web JetAdmin or the Embedded Web Server (**Security** > **Security settings**).

Disk Wipe

Disk Wipe is the same as Secure File Erase.

See Secure File Erase on page 181. It erases all temporary files, including old ones.

The Disk Wipe configuration can be changed from Web JetAdmin or the Embedded Web Server (**Security** > **Security settings**).

NOTE: If you choose to erase the whole hard disk, you may be asked to restart the printer several times during the process, which will take about 6 hours with Secure Fast Erase or 24 hours with Secure Sanitizing Erase.

14 Scanner maintenance

The following sections provide details for this topic.

Clean the scanner's glass plate

The following steps provide the complete procedure for this topic.

You are recommended to clean the scanner's glass plate periodically, depending on how often you use the scanner.

1. Turn off the printer using the Power key at the front, then also turn off the power switch at the rear and disconnect the power cable.
2. There is a small lever at the rear left of the scanner. Slide the lever up and open the scanner cover.

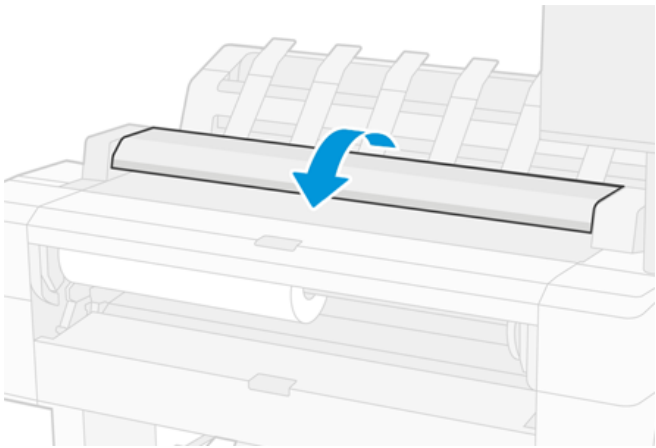

⚠ **WARNING!** Do not lift the scanner while the scanner cover is open. Your fingers or hand may be trapped or crushed.

3. Gently wipe the glass plate and the surrounding area with a lint-free cloth dampened with water and then wrung dry. A suitable cloth is provided with the printer.

⚠ **CAUTION:** Do not use abrasives, acetone, benzene or fluids that contain these chemicals. Do not spray liquids directly onto the scanner glass plate or anywhere else in the scanner.

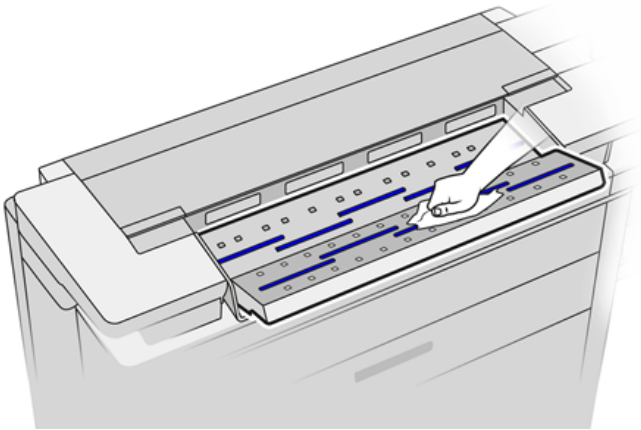

Do not worry about tiny droplets of water left on the glass: they will evaporate.

4. Optionally, for more thorough cleaning:
   - Remove the glass plate and clean it on both sides.
   - Clean the pressure rollers and the feed rollers.

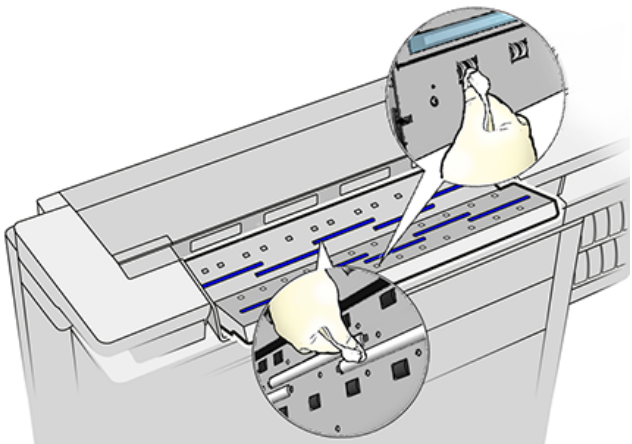

5. Close the scanner cover and gently push it down to lock it into place.

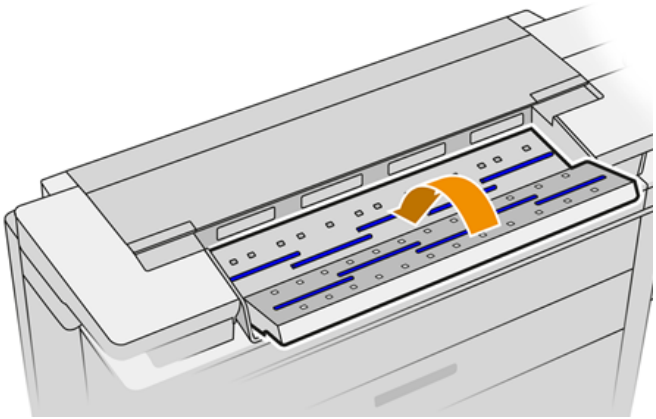

6. Clean the area immediately in front of the scanner, where the scanned sheet rests before scanning.

7. Reconnect the printer's power cable, turn on the power switch at the rear, and turn on the printer using the Power key.

Calibrate the scanner

Your scanner has been calibrated at the factory, and theoretically CIS scanners do not need to be recalibrated during their lifetimes.

Nevertheless, because of environmental changes, your scanner may start showing image defects that can be easily corrected by recalibrating the scanner. The whole procedure takes less than 10 minutes, and you are recommended to recalibrate the scanner whenever you see some undesired artifact or a lack of quality in scanned files or copies, bearing in mind the limitations of CIS technology already explained in this guide. If you perform calibration successfully and still have concerns about the image quality, see Scanner troubleshooting on page 120; alternatively, you may want to consider buying a CCD scanner.

To calibrate the scanner

The following steps provide the complete procedure for this topic.

1. Clean the scanner. See Clean the scanner's glass plate on page 183.
2. Go to the front panel and tap ⚙, then **Scanner preferences** > **Calibrate scanner**.
3. Follow the instructions in the front panel.

If calibration fails

The following steps provide the complete procedure for this topic.

The supplied maintenance sheet required to perform scanner calibration looks like this:

Load the maintenance sheet into the scanner face up, centered and with as little skew as possible. Once the calibration is finished, the maintenance sheet should be carefully placed into its solid cover, and saved in a fresh and dry place. Otherwise, it could be damaged, which could affect the operation of your scanner in the future. Check that the maintenance sheet is not dirty, wrinkled, scratched or folded before calibrating the scanner. If necessary, call your support representative and ask for a new maintenance sheet.

1. Ensure that the printer is turned on and ready for normal operation.
2. Ensure that the scanner is working correctly. To test it, scan a small document to file.
3. Ensure that the scanner is clean before calibration. If in doubt, clean the scanner and restart the calibration process.

4. Eject and reload the calibration sheet, checking that it is clean, in good condition, face up and perfectly centered in the scanner.
5. If the above steps do not help, eject the sheet and restart the printer (turn off and on). When the system has restarted, repeat the calibration.
6. If you cannot perform the calibration successfully in three consecutive attempts, call your support representative and report the error code that appears in the front panel.

15 Supplies and accessories

The following sections provide details for this topic.

How to order supplies and accessories

There are two alternative ways to order supplies or accessories:

- Visit http://www.hp.com, select your printer and click on the accessories button.
- Contact HP Support (see Contact HP Support on page 238), and check that what you want is available in your area.

The rest of this chapter lists the available supplies and accessories, and their part numbers, at the time of writing.

Order ink supplies

The following ink supplies can be ordered for your printer.

Table 15-1 Ink cartridges

Cartridge	Part number
HP 730 130-ml Cyan DesignJet Ink Cartridge	P2V62A
HP 730 130-ml Magenta DesignJet Ink Cartridge	P2V63A
HP 730 130-ml Yellow DesignJet Ink Cartridge	P2V64A
HP 730 130-ml Matte Black DesignJet Ink Cartridge	P2V65A
HP 730 130-ml Gray DesignJet Ink Cartridge	P2V66A
HP 730 130-ml Photo Black DesignJet Ink Cartridge	P2V67A
HP 730 300-ml Cyan DesignJet Ink Cartridge	P2V68A
HP 730 300-ml Magenta DesignJet Ink Cartridge	P2V69A
HP 730 300-ml Yellow DesignJet Ink Cartridge	P2V70A
HP 730 300-ml Matte Black DesignJet Ink Cartridge	P2V71A
HP 730 300-ml Gray DesignJet Ink Cartridge	P2V72A
HP 730 300-ml Photo Black DesignJet Ink Cartridge	P2V73A

Table 15-2 Printhead

Printhead	Part number
HP 732 Printhead	B3P06A

Order paper

The following paper types are currently provided for use with your printer.

NOTE: This list is likely to change over the course of time. For the latest information, see http://www.hplfmedia.com.

NOTE: Paper types that HP does not support may nevertheless be compatible with your printer.

Key to availability:

- (A) indicates papers available in Asia (excluding Japan)
- (C) indicates papers available in China
- (E) indicates papers available in Europe, the Middle East and Africa
- (J) indicates papers available in Japan
- (L) indicates papers available in Latin America
- (N) indicates papers available in North America

If the part number is not followed by parentheses, the paper is available in all regions.

Table 15-3 Roll paper

Paper type	g/m²	Length	Width	Product number
HP Bond and Coated Paper				
HP Super Heavyweight Plus Matte Paper	210	30.4 m (100 ft)	610 mm (24 in)	Q6626B (ELN)
			914 mm (36 in)	Q6627B (AELN)
HP Universal Bond Paper	80	45.7 m (150 ft)	594 mm (23.39 in) (A1)	Q8003A (AJ)
			610 mm (24 in)	Q1396A
				SA025A (2 Pack) (J)
			914 mm (36 in)	Q1397A
		91.4 m (300 ft)	594 mm (23.39 in) (A1)	Q8004A (EAJ)
			840 mm (33.11 in) (A0)	Q8005A (EAJ)
			914 mm (36 in)	C6810A
HP Bright White Inkjet Paper	90	45.7 m (150 ft)	419 mm (16.5 in)	Q1446A (EJ)
			594 mm (23.4 in) (A1)	Q1445A (EJ)
			610 mm (24 in)	C1860A (LN)
			610 mm (24 in)	C6035A (EAJ)
			840 mm (33.11 in) (A0)	Q1444A (EAJ)
			914 mm (36 in)	C6036A (EAJ)
			914 mm (36 in)	C1861A (LN)
		91.4 m (300 ft)	914 mm (36 in)	C6810A
HP Heavyweight Coated Paper	130	30.4 m (100 ft)	610 mm (24 in)	C6029C
			914 mm (36 in)	C6030C

Table 15-3 Roll paper (continued)

Paper type	g/m²	Length	Width	Product number
HP Coated Paper	90	45.7 m (150 ft)	594 mm (23.4 in) (A1)	Q1442A (AEJ)
			610 mm (24 in)	C6019B
			840 mm (33.11 in) (A0)	Q1441A (EJ)
			914 mm (36 in)	C6020B
		91.4 m (300 ft)	914 mm (36 in)	C6980A
HP Universal Coated Paper	90	45.7 m (150 ft)	610 mm (24 in)	Q1404B
			914 mm (36 in)	Q1405B
HP Universal Heavyweight Coated Paper	131	30.4 m (100 ft)	610 mm (24 in)	Q1412B
			914 mm (36 in)	Q1413B
HP Technical Paper				
HP Translucent Bond Paper	63	45.7 m (150 ft)	610 mm (24 in)	C3860A (LN)
			914 mm (36 in)	C3859A (AJLN)
HP Natural Tracing Paper	90	45.7 m (150 ft)	594 mm (23.4 in) (A1)	Q1439A (J)
			610 mm (24 in)	C3869A
			914 mm (36 in)	C3868A
HP Film (Technical and Graphic)				
HP Clear Film	174	22.8 m (75 ft)	610 mm (24 in)	C3876A
			914 mm (36 in)	C3875A
HP Matte Film	160	38.1 m (125 ft)	610 mm (24 in)	51642A
			914 mm (36 in)	51642B
HP Special Inkjet Paper	131	45.7 m (150 ft)	610 mm (24 in)	51631D (ELN)
			914 mm (36 in)	51631E
HP Photographic Paper				
HP Universal Gloss Photo Paper	200	30.4 m (100 ft)	610 mm (24 in)	Q1426B
			914 mm (36 in)	Q1247B
HP Universal Satin Photo Paper	200	30.4 m (100 ft)	610 mm (24 in)	Q1420B
			914 mm (36 in)	Q1421B
HP Universal Instant-dry Gloss Photo Paper	200	30.4 m (100 ft)	610 mm (24 in)	Q6574A
			914 mm (36 in)	Q6575A
HP Premium Instant-dry Gloss Photo Paper	235	30.5 m (100 ft)	610 mm (24 in)	Q7991A (AELN)
			914 mm (36 in)	Q7993A (AELN)
HP Universal Instant-dry Satin Photo Paper	200	30.4 m (100 ft)	610 mm (24 in)	Q6579A
			914 mm (36 in)	Q6580A
		60.9 m (200 ft)	1066 mm (42 in)	Q8755A (AELN)

Table 15-3 Roll paper (continued)

Paper type	g/m²	Length	Width	Product number
HP Premium Instant-dry Satin Photo Paper	235	30.5 m (100 ft)	610 mm (24 in)	Q7992A (AELN)
			914 mm (36 in)	Q7994A (AELN)
HP Premium Matte Photo Paper	210	30.4 m (100 ft)	610 mm (24 in)	CG459B
			914 mm (36 in)	CG460B
HP Self-Adhesive Material				
HP Everyday Adhesive Matte Polypropylene	120	22.8 m (75 ft)	610 mm (24 in)	C0F18A (AELN)
	168 with liner		914 mm (36 in)	C0F19A (AELN)
HP Everyday Adhesive Matte Polypropylene , 3-in Core	120	30.5 m (100 ft)	914 mm (36 in)	D9R24A (ELN)
HP Everyday Adhesive Gloss Polypropylene	140	22.8 m (75 ft)	914 mm (36 in)	C0F28A (AELN)
	190 with liner			
HP Universal Adhesive Vinyl	160	20 m (66 ft)	914 mm (36 in)	C2T51B (2 Pack) (ELN)
	300 with liner			
HP Banner and Sign Material				
HP Everyday Matte Polypropylene	120	30.4 m (100 ft)	610 mm (24 in)	CH022A
			914 mm (36 in)	CH023A (AELN)
		60.9 m (200 ft)	914 mm (36 in)	CH024A
Media name: HP Everyday Matte Polypropylene , 3-in Core	120	61 m (200 ft)	914 mm (36 in)	D9R28A (ELN)
HP Premium Matte Polypropylene	140	22.9 m (75 ft)	914 mm (36 in)	C2T53A (ELN)
HP Durable Synthetic Banner	133	22.9 m (75 ft)	914 mm (36 in)	C0F12A (LN)
HP Durable Synthetic Banner, 3-in Core	133	30.5 m (100 ft)	914 mm (36 in)	1AF09A (LN)
HP Everyday Blockout Display Film	220	30.5 m (100 ft)	914 mm (36 in)	Y3Z17A (ELN)

Order accessories

The following accessories can be ordered for your printer.

Table 15-4 Accessories

Name	Product number
HP USB 3.0 to Gigabit LAN Adapter	N7P47AA
HP DesignJet PostScript®/Pdf Upgrade Kit	C0C66C
HP DesignJet 3-in Spindle Adaptor Kit	CN538A
HP DesignJet 36-in Spindle	L4R66A

Table 15-4 Accessories (continued)

Name	Product number
HP HD Pro 42-in scanner	G6H51B
HP SD Pro 44-in scanner	G6H50B

Introduction to the accessories

The following sections provide details for this topic.

PostScript Upgrade

The PostScript Upgrade enables a T2600MFP to print the same file types that a T2600MFP PS can print, including PDF and PostScript files, and the generation of PDF files from scans (scan-to-PDF). The PostScript upgrade can be plugged into the printer's USB host. It is not necessary to leave it permanently connected: just plug it in once, and the printer is upgraded forever.

Spindle

With extra spindles, you can change rapidly from one paper type to another.

3-in Spindle Adaptor Kit

With this adaptor you can use paper rolls with 3-inch cores, provided that the diameter of the roll is within printer specifications.

16 Troubleshooting paper issues

The following sections provide details for this topic.

Paper cannot be loaded successfully

The following sections provide details for this topic.

- Ensure that no paper is already loaded.
- Ensure that the paper is far enough inside the printer: you should feel the printer grab the paper.
- Do not attempt to straighten the paper during the aligning process, unless instructed to do so by the front-panel display. The printer automatically attempts to straighten the paper.
- The paper may be crumpled, or warped, or may have irregular edges.
- It can be difficult to insert a particularly stiff paper from the upper roll. Try moving it to the lower roll.

Unsuccessful roll load issues

This topic explains the concepts involved in this subject.

- If the paper does not load, the leading edge of the paper may not be straight or clean and needs to be trimmed. Remove the initial 2 cm (1 in) from the roll and try again. This may be necessary even with a new roll of paper.
- Ensure the roll ends are tight against the spindle ends.
- Check that the spindle is correctly inserted.
- Check that the paper is correctly loaded on the spindle. See Load a roll onto the spindle on page 37.
- Check that all roll end plugs have been removed.
- Check that the paper is wound tightly on the roll.
- Do not touch the roll or paper at during the alignment process.
- When loading a roll, the roll cover must remain open until the front panel prompts you to close it.

If the paper has not been inserted straight, the printer attempts to straighten the roll.

If you would like to start the load process again, cancel the process on the front panel and rewind the roll from the end of the spindle until the edge is removed from the printer.

NOTE: If the roll has become loose around the core, the printer cannot load the paper.

Unsuccessful sheet load

This topic explains the concepts involved in this subject.

- Guide the sheet, especially thick papers, when the printer initially feeds the sheet.
- Ensure that the sheet is aligned with the reference line on the roll cover.
- Do not attempt to straighten the sheet during the loading process, unless instructed to by the front-panel display.
- Do not use hand-cut sheets, which may be of irregular shapes. Use only purchased sheets.
- Ensure the single sheet is not skewed.

In case of any problem, follow the instructions given on the front-panel display.

If you would like to start the load process again, cancel the process on the front panel; the printer ejects the sheet.

Paper loading error messages

Here is a list of front-panel messages related to paper loading, with the suggested corrective action.

Table 16-1 Paper loading error messages

Front-panel message	Suggested action
Paper incorrectly loaded	The paper has not been loaded correctly. Remove the paper.
Paper loaded with too much skew	During the paper load process the printer detected that the paper had too much skew. Follow the instructions on the front-panel display.
Paper loose around core	The end of the roll has become loose around the core. Tighten the paper to the core or insert a new roll.
Paper not detected	During the paper load process the printer did not detect any paper. Ensure the paper is inserted fully and is not transparent.
Roll cover closed during paper load process	Do not close the roll cover until you are prompted to do so by the front panel.
Sheet too big	During the load process the printer has detected that the sheet of paper is either too wide or too long to be loaded correctly. Follow the instructions on the front-panel display.
Sheet too small	During the load process the printer detected that the sheet of paper is too narrow or too short to be loaded in the printer. Follow the instructions on the front-panel display.
Upper roll load and paper is inserted through the single sheet path	Avoid inserting roll paper into the cut sheet slot.

Paper type is not in the driver

To work with a paper not in the driver, you can use your paper as one of the presets already in the driver, however, you must identify whether your paper is transparent or translucent, glossy or matte.

NOTE: For glossy paper, it is important to use a glossy paper type, as matte black ink does not print well on glossy paper.

Glossy paper

If your paper is a photo paper, use the **Photo Paper** category.

Matte paper

If your paper is a matte paper, use any of the papers in the **Bond and Coated Paper** category. If your paper is classified as photo matte, its category depends on whether it can hold matte black ink. In this case, try both with **Heavyweight Coated Paper** and with **Photo Semi Gloss/Satin Paper**, and choose the best result.

General-purpose paper

This topic explains the concepts involved in this subject.

- For natural tracing papers, select paper type **Natural Tracing Paper < 65 g/m2** or **Natural Tracing Paper > 65 g/m2**, depending on the weight of the paper.
- For thin papers (< 90 g/m^2) uncoated papers (for example plain paper or bright white paper) select paper type **Bond and Coated Paper** > **Plain Paper**.
- For light coated papers (< 110 g/m^2), select paper type **Bond and Coated Paper** > **HP Coated Paper**.
- For heavyweight coated papers (< 200 g/m^2), select paper type **Bond and Coated Paper** > **Heavyweight Coated Paper**.
- For cockle-free very thick coated papers (> 200 g/m ^{2}), select paper type **Bond and Coated Paper** > **Super Heavyweight Coated Paper**.

Black ink is easily removed when touched

This happens when your paper is incompatible with matte black ink. To use non-matte black ink, select any of the papers in the **Photo Paper** category.

After printing, the paper has wrinkles or there is too much ink

This happens when too much ink is used. To use less ink, select a thinner category.

Matte paper categories from thinnest to thickest are:

- Plain Paper
- Coated Paper
- Heavyweight Coated Paper
- Super Heavyweight Coated Paper

For other image quality problems, see Troubleshooting print-quality issues on page 210.

Printer printed on the wrong paper type

If the printer prints your job before you were able to load your desired paper, you may have *Use Printer Settings* selected for the Paper Type in the printer driver.

When either of these is selected, the printer will print immediately on whichever paper is loaded. Load your desired paper, see Paper handling on page 36, and select your paper type specifically in the driver.

- **In the Windows driver dialog:** select the **Paper/Quality** or **Paper** tab (depending on the driver version), then select your paper type from the Paper Type list.

NOTE: **Use Printer Settings** (Windows) or **Any** (Mac OS X) is the driver default.

Automatic cut not available

Some paper types cannot be cut by the automatic cutter. When such a paper type is loaded and active, the printer cannot switch automatically to the other roll: the active roll must first be unloaded manually.

On hold for paper

Based on a set of conditions that you can set when sending a job.

See Solve paper mismatch on page 97. The printer will decide which of the loaded rolls of paper is more suitable to print the job. If there is no roll of paper available that meets all the conditions, the printer will put the job on hold for paper. You can manually resume the job, forcing it to print on a paper other than the one originally specified, otherwise it will stay on hold.

NOTE: When an uncuttable roll is active, every job sent to any other paper source is put on hold until you manually unload the uncuttable roll.

Which criteria are used to decide on which roll a job will be printed?

When a user sends a job, the desired paper type can be set in the driver.

The printer will print the job on a roll of paper of the chosen paper type that is large enough to print the drawing without clipping. If there is more than one roll on which the job could be printed meeting all the criteria, the roll will be chosen according to your preferences. These can be set from the front panel: see Roll policies on page 97.

When is a job put on hold for paper?

This topic explains the concepts involved in this subject.

If the paper mismatch action is set to **Pause and ask** (see Solve paper mismatch on page 97), a job is put on hold for paper in the following cases:

- The paper type that has been selected by the user is not currently loaded on the specified roll—or on either of the rolls, if no roll has been specified.
- The paper type that has been selected by the user is loaded on the specified roll, but the drawing is too large to fit on the roll—or on either of the rolls, if no roll has been specified.

If I load a new roll of paper, will jobs that were on hold for paper be automatically printed?

Yes. Every time a new roll of paper is loaded, the printer will check if there are any jobs on hold for paper that could be printed on the loaded roll.

I don't like jobs being put on hold for paper. Can I prevent it?

Yes, this can be done from the front panel.

See Solve paper mismatch on page 97.

My job is exactly as wide as the roll of paper that is loaded on the printer, but is put on hold for paper

This topic explains the concepts involved in this subject.

Margins are managed in different ways depending on the file type:

- For HP-GL/2 and HP RTL files, by default, margins are included inside the drawing, so a 914 mm (36 in) HP-GL/2 and HP RTL file can be printed on a 914 mm (36 in) roll of paper and will not be put on hold for paper.
- For other file formats, such as PostScript, PDF, TIFF, or JPEG, the printer assumes that margins need to be added outside the drawing (as, in many cases, these formats are used for photographs and other images that do not include margins). This means that, to print a 914 mm (36 in) TIFF, the printer needs to add margins, and the drawing needs 925 mm (36.4 in) of paper to be printed; this would cause the job to be put on hold if the paper that is loaded on the printer is only 914 mm (36 in) wide.

  If you wish to print these file formats without adding extra margins outside of the drawing, the **Clip contents by margins** option can be used. This option will force the margins to be set inside of the drawing, so a 914 mm (36 in) TIFF can be printed on a 914 mm (36 in) roll of paper without being put on hold. However, if there is no white space already included in the drawing's borders, some contents could be clipped because of the margins.

The paper has jammed in the print platen

The following steps provide the complete procedure for this topic.

When a paper jam occurs, you normally see the **Possible paper jam** message in the front-panel display. The front panel starts the paper jam wizard which displays where the jam has occurred and how to fix it. Clear the paper jam as instructed on each wizard screen.

1. Turn off the printer at the front panel.
2. Lift the scanner.

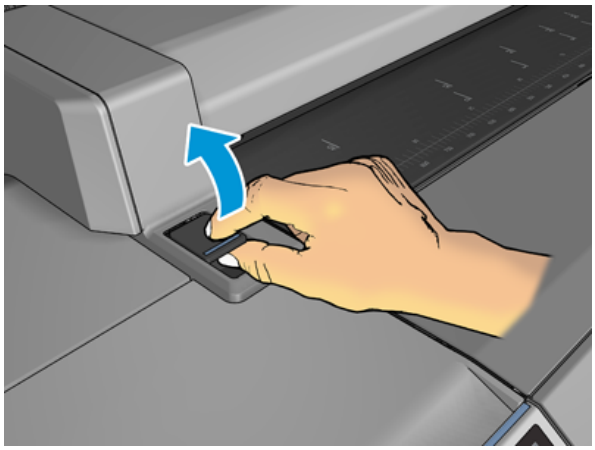

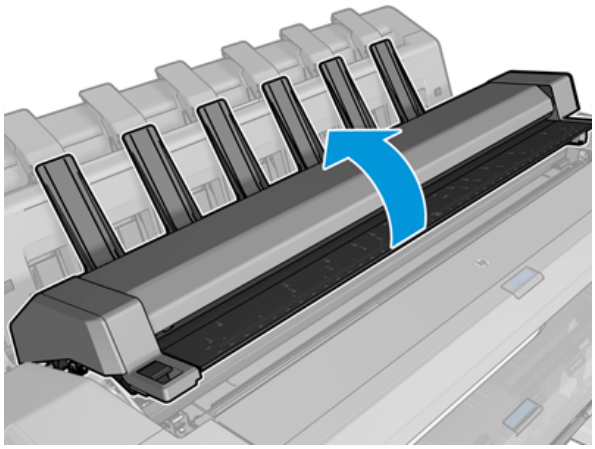

3. Move the carriage manually to the left side of the printer, if feasible.

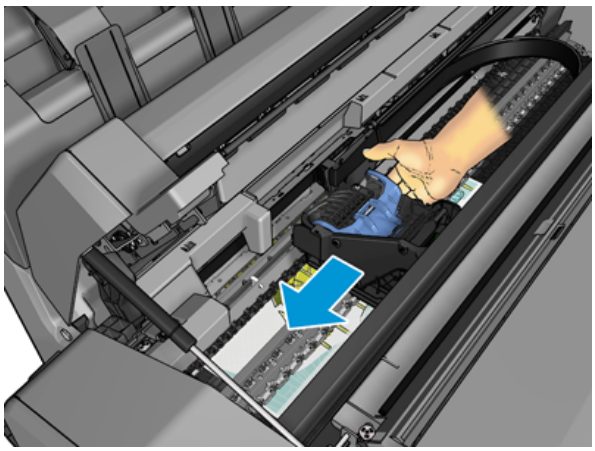

4. Go to the paper path.

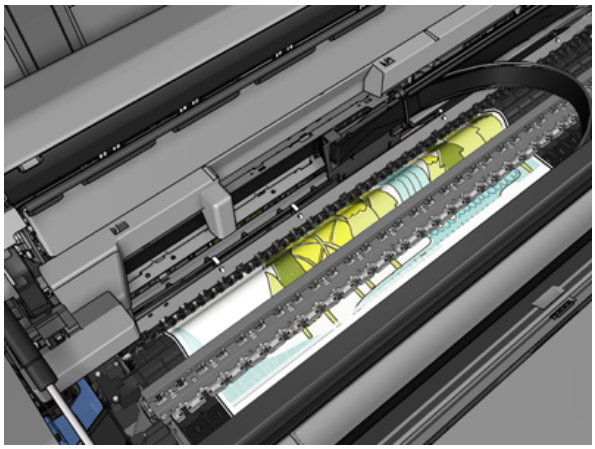

5. Cut the paper with a pair of scissors.

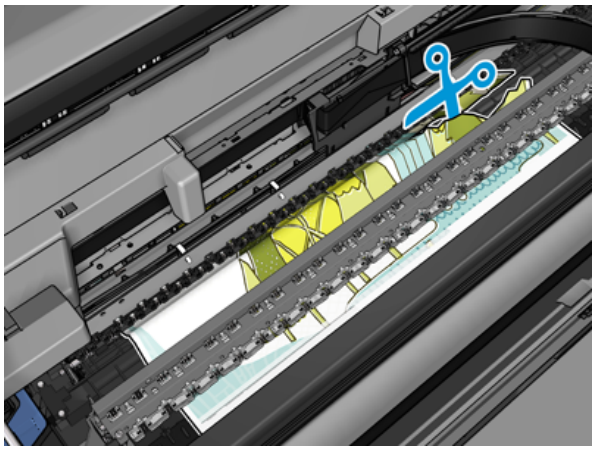

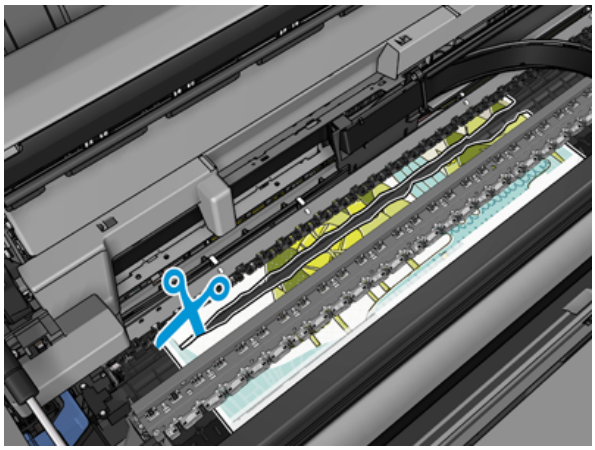

6. Open the roll cover.

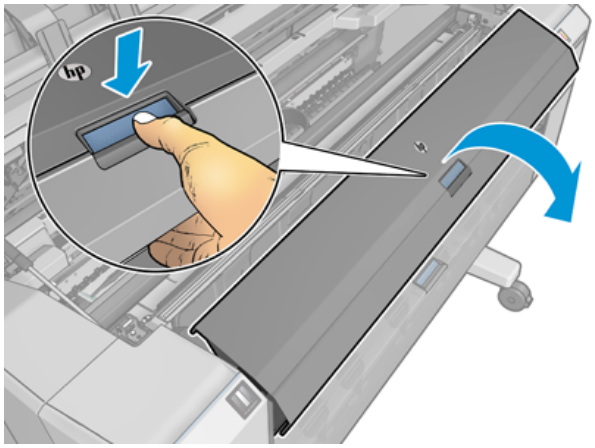

7. Manually rewind paper onto the roll.

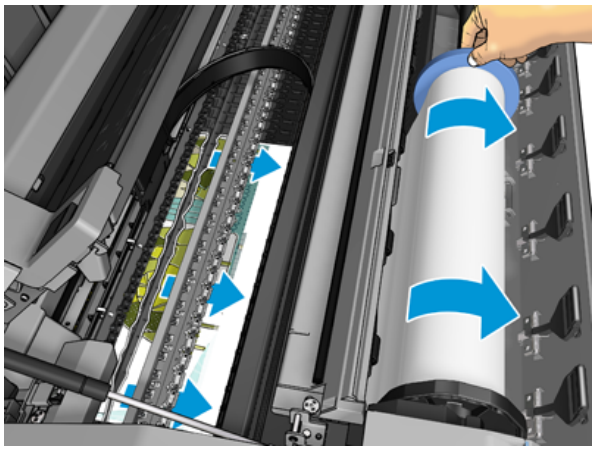

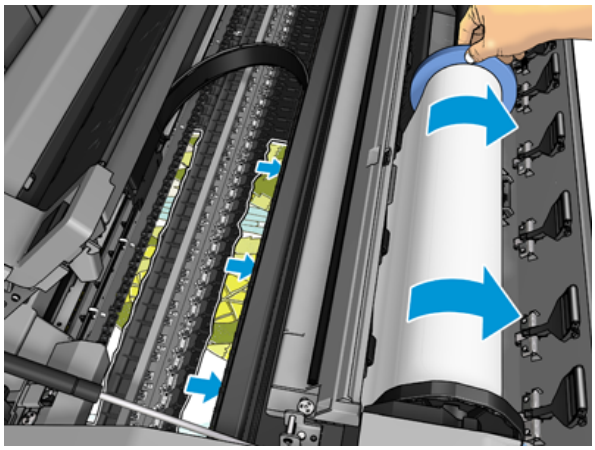

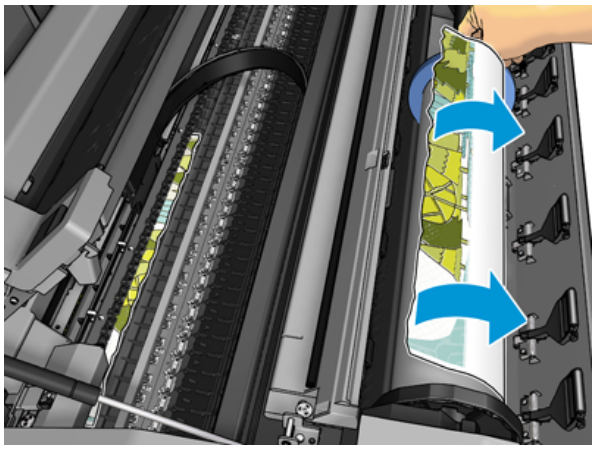

8. If the leading edge of the paper is ragged, trim it carefully with scissors.

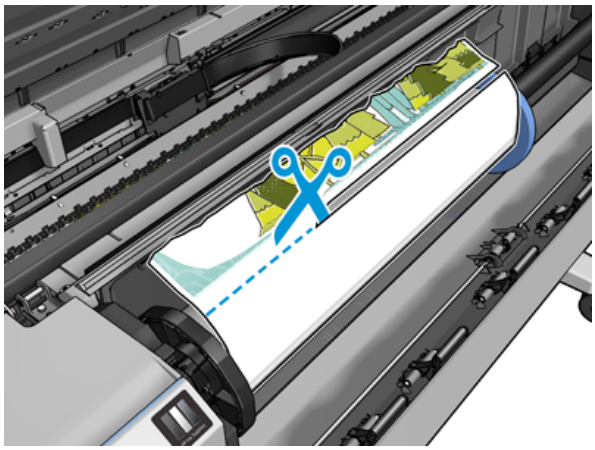

9. Remove the paper left in the printer.

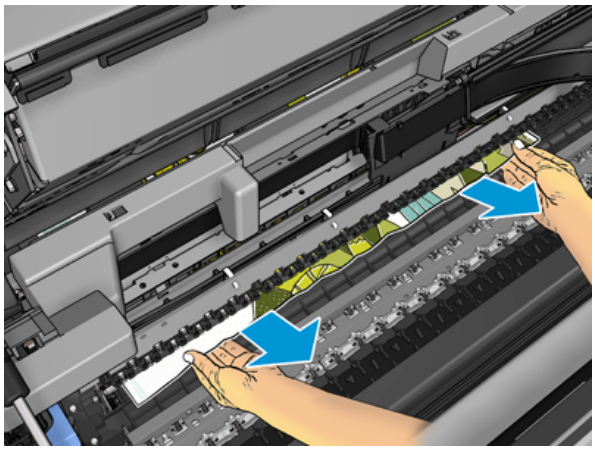

10. Make sure you have removed every fragment of paper.

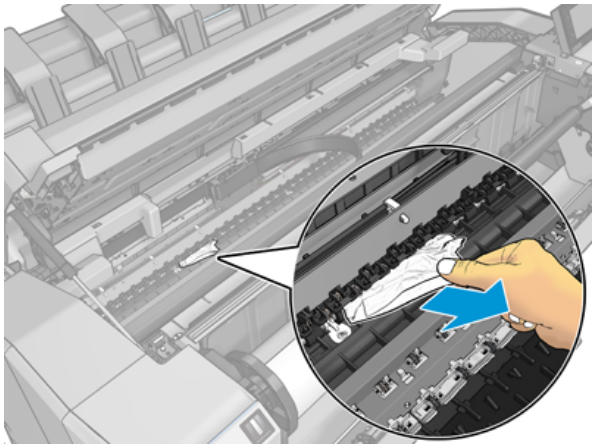

11. Lower the scanner and close the roll cover.

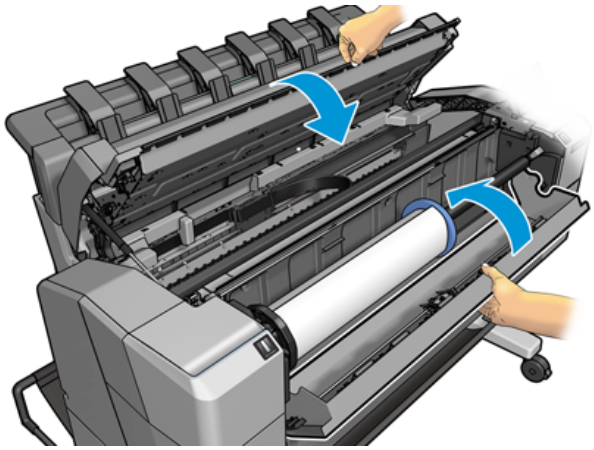

12. Restart the printer by holding down the power button for a few seconds.

13. Reload the roll, or load a new sheet see Paper handling on page 36.

NOTE: If you find that there is still some paper causing an obstruction within the printer, restart the procedure and carefully remove all pieces of paper.

The paper has jammed in the stacker

When a paper jam is detected in the stacker, printing is paused, and the front panel asks you to open the stacker cover and clear the jam by pulling out the paper.

When the stacker cover is closed and the printer detects no jammed paper, the front panel requests confirmation to continue printing.

The printer reports unexpectedly that the stacker is full

The printer may report that the stacker is full in the following circumstances:

- When there is a paper jam in the stacker
- When you are using very thin or very stiff paper, such as heavyweight coated paper
- When you are sending small paper sizes to the stacker, such as A3 portrait or A2 landscape

A strip stays on the output tray and generates jams

If a small piece of paper (200 mm or smaller) has been cut, such as before (if new roll) and after a full-bleed print or after the front-panel option **Move and cut** has been used, the cut strip remains in the output tray. Only when the printer is not printing, reach into the tray and remove the strip.

Printer displays out of paper when paper is available

If the roll has become loose from its core, it will not feed correctly and the printer will not load the paper. If possible, tighten the paper to its core or load a new roll.

Prints do not fall neatly into the basket

This topic explains the concepts involved in this subject.

- Ensure that the basket is correctly installed.
- Ensure that the basket is open.
- Ensure that the basket is not full.
- Paper often tends to curl near the end of a roll, which can cause output problems. Load a new roll, or remove prints manually as they are completed.

Sheet stays in the printer when the print has been completed

The printer holds the paper to allow the print to dry after printing.

See Change the drying time on page 52. If the paper is only partially ejected after the drying time, gently pull the sheet out of the printer. If the automatic cutter is disabled, use the **Move and cut** option in the front panel, see Clean cut on page 52.

Paper is cut when the print has been completed

By default the printer cuts the paper after the drying time has been completed.

See Change the drying time on page 52. You can disable the cutter, see Turn the automatic cutter on and off on page 52.

Cutter does not cut well

By default, the printer is set to cut the paper automatically after the drying time has been completed. If the cutter is turned on but not cutting correctly, check that the cutter rail is clean and clear of any obstacles.

If the cutter is turned off, **Move and cut** only advances the paper. Use it to move the print far enough out of the front of the printer, until it is convenient to cut manually with a straight edge or scissors.

Roll is loose on the spindle

The roll may need to be replaced or reloaded.

Ensure that you are using the right core, and use the HP DesignJet 3-in Core Adapter when needed.

Recalibrate the paper advance

Accurate paper advance is important to print quality because it is part of controlling the proper placement of dots on the paper. If the paper is not advanced the proper distance between printhead passes, light or dark bands appear in the print and image grain may increase.

The printer is calibrated to advance correctly with all the papers appearing in the front panel. When you select the type of loaded paper, the printer adjusts the rate at which to advance the paper while printing. However, if you are not satisfied with the default calibration of your paper, you may need to recalibrate the rate at which the paper advances. See Troubleshooting print-quality issues on page 210 for steps to determine if paper advance calibration will solve your issue.

You can check the paper advance calibration status of the currently loaded paper from the front panel at any time by tapping , then ···, then , then **Calibration status**. The status may be one of the following:

- DEFAULT: This status appears when loading any paper that has not been calibrated. HP papers in the Front Panel have been optimized by default and unless you experience image quality problems in your printed image such as banding or graininess it is not recommended to recalibrate the paper advance.
- OK: This status indicates that the loaded paper has been calibrated before. However you may need to repeat the calibration if you experience print-quality problems such as banding or graininess in your printed image.

NOTE: Whenever you update the printer's firmware, the paper advance calibration values are reset to factory default, see Update the firmware on page 180.

Recalibrating the paper advance procedure

The following steps provide the complete procedure for this topic.

CAUTION: If you are using a transparent paper or film, go directly to step 3 of this procedure.

1. From the front panel, tap , then **Paper advance calibration** > **Continue**. The printer automatically recalibrates the paper advance and prints a paper advance calibration image.
2. Wait until the front panel displays the status page, and reprint your print.

   NOTE: The recalibration procedure takes approximately three minutes. Do not worry about the paper advance calibration image. The front-panel display shows any errors in the process.

   If you are satisfied with your print continue using this calibration for your paper type. If you see improvement in your print, continue with step three. If you are dissatisfied with the recalibration, return to the default calibration, see Return to default calibration on page 209.
3. If you would like to fine-tune the calibration or are using a transparent paper, tap , then **Paper advance calibration** > **Continue**.

4. Select the percentage of change from -100% to +100%. To correct light banding, decrease the percentage.

To correct dark banding, increase the percentage.

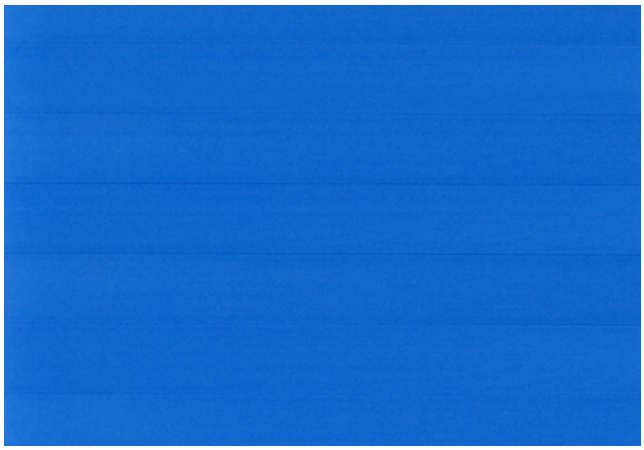

Return to default calibration

The following steps provide the complete procedure for this topic.

Returning to the default calibration sets all the corrections made by the paper advance calibration to zero. To return to the default paper advance calibration value, you must reset the calibration.

1. From the front panel, tap , then ···, then , then **Reset calibration**.

2. Wait until the front panel displays the operation has completed successfully.

17 Troubleshooting print-quality issues

The following sections provide details for this topic.

General advice

This topic explains the concepts involved in this subject.

When you have any print-quality problem:

- To achieve the best performance from your printer, use only genuine manufacturer's supplies and accessories, whose reliability and performance have been thoroughly tested to give trouble-free performance and best-quality prints. For details of recommended papers, see Order paper on page 189.
- Make sure that the paper type selected in the front panel is the same as the paper type loaded into the printer (see View information about the paper on page 49). At the same time, check that the paper type has been calibrated. Also make sure that the paper type selected in your software is the same as the paper type loaded into the printer.

⚠ **CAUTION:** If you have the wrong paper type selected, you could experience poor print quality and incorrect colors, and perhaps even damage to the printheads.

- Check that you are using the most appropriate print-quality settings for your purposes (see Printing on page 72). You are likely to see lower print quality if you have moved the print-quality slider to the 'Speed' end of the scale, or set the custom quality level to **Fast**.
- Check that your environmental conditions (temperature, humidity) are in the recommended range. See Environmental specifications on page 242.
- Check that your ink cartridges and printheads have not passed their expiration dates: see Maintain the ink cartridges on page 178.

Horizontal lines across the image (banding)

The following steps provide the complete procedure for this topic.

If your printed image suffers from added horizontal lines as shown (the color may vary):

1. Check that the paper type you have loaded corresponds to the paper type selected in the front panel and in your software. See View information about the paper on page 49.

2. Check that you are using appropriate print-quality settings for your purposes (see Printing on page 72). In some cases, you can overcome a print-quality problem merely by selecting a higher print-quality level. For instance, if you have set the Print Quality slider to **Speed**, try setting it to **Quality**. If you change the print-quality settings, you may wish to reprint your job at this point in case the problem has been solved.

3. Print the Image Diagnostics Print and follow the instructions in Image Diagnostics Print on page 223, including printhead cleaning if recommended.

4. If the printheads are working correctly, go to the front panel and tap , then **Paper advance calibration** > **Continue**, then choose the paper source. See Recalibrate the paper advance on page 208.

If the problem persists despite all the above actions, contact your customer service representative for further support.

Whole image is blurry or grainy

The following steps provide the complete procedure for this topic.

1. Check that the paper type you have loaded corresponds to the paper type selected in the front panel and in your software. See View information about the paper on page 49.

2. Check that you are printing on the correct side of the paper.

3. Check that you are using appropriate print-quality settings (see Printing on page 72). In some cases, you can overcome a print-quality problem merely by selecting a higher print-quality level. For instance, if you have set the Print Quality slider to **Speed**, try setting it to **Quality**. If you change the print-quality settings, you may wish to reprint your job at this point in case the problem has been solved.

4. Realign the printheads. See Align the printhead on page 228. After alignment, you may wish to reprint your job in case the problem has been solved.

5. Go to the front panel and tap , then **Paper advance calibration**, then choose the paper source. See Recalibrate the paper advance on page 208.

If the problem persists despite all the above actions, contact your customer service representative for further support.

Paper is not flat

The following steps provide the complete procedure for this topic.

If the paper does not lie flat when it comes out of the printer, but has shallow waves in it, you are likely to see defects in the printed image, such as vertical stripes. This can happen when you use thin paper that becomes saturated with ink.

1. Check that the paper type you have loaded corresponds to the paper type selected in the front panel and in your software. See View information about the paper on page 49.

2. Try changing to a thicker paper type, such as HP Heavyweight Coated Paper or HP Super Heavyweight Plus Matte Paper.

3. Select a paper type that is slightly thinner than the paper you have loaded; this will cause the printer to use less ink. Here are some example paper types in ascending order of thickness: Plain Paper, Coated Paper, Heavyweight Coated Paper, Super Heavyweight Plus Matte Paper.

Print is scuffed or scratched

The black ink pigment can be scuffed or scratched when touched by a finger, a pen or some other object. This is particularly noticeable on coated paper.

Glossy paper may be extremely sensitive to the basket or to anything else that it contacts soon after printing, depending on the amount of ink used and the environmental conditions at the time of printing.

To reduce the risk of scuffs and scratches:

- Handle prints carefully.
- Avoid stacking prints on top of each other.
- Catch your prints as they are cut from the roll and do not let them fall into the basket. Alternatively, leave a sheet of paper in the basket so that freshly printed sheets do not make direct contact with the basket.

Ink marks on the paper

This problem can occur for several different reasons.

Horizontal smears on the front of coated paper

The following steps provide the complete procedure for this topic.

If a lot of ink is used on plain or coated paper, the paper absorbs the ink quickly and expands. As the printheads move over the paper, the printheads may come into contact with the paper and smear the printed image. This problem is normally seen only on cut sheets of paper (not on roll paper).

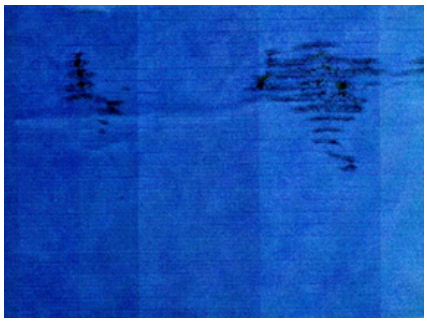

Whenever you notice this problem, cancel the printing job immediately. Tap and also cancel the job from your computer application. Soaked paper can damage the printheads.

Try the following suggestions to avoid this problem:

1. Check that the paper type you have loaded corresponds to the paper type selected in the front panel and in your software. See View information about the paper on page 49.
2. Use a recommended paper type (see Order paper on page 189) and the correct print settings.
3. If using sheet paper, try rotating the sheet 90 degrees. The orientation of the paper fibers may affect performance.
4. Try changing to a thicker paper type, such as HP Heavyweight Coated Paper and HP Super Heavyweight Plus Matte Paper.
5. Select a paper type that is slightly thinner than the paper you have loaded; this will cause the printer to use less ink. Here are some example paper types in ascending order of thickness: Plain Paper, Coated Paper, Heavyweight Coated Paper, Super Heavyweight Plus Matte Paper.
6. Try to increase the margins by relocating the image to the center of the page using your software application.

Ink marks on the back of the paper

Clean the platen with a soft cloth. Clean each rib separately without touching the foam between the ribs.

Black horizontal lines on yellow background

This problem may be caused by storing the printer in a cold environment.

Go to the front panel and tap , then **Clean printheads**.

Black ink comes off when you touch the print

This problem may be caused by printing with matte black ink on glossy paper. The printer will not use matte black ink if it knows that the paper will not retain it. To be sure of avoiding matte black ink, you can select any paper type from the Photo Paper category.

Edges of objects are stepped or not sharp

The following steps provide the complete procedure for this topic.

1. If edges of objects or lines appear to be poorly defined or lighter in density, and you have already set the print-quality slider to **Quality** in the print dialog box, select the custom print-quality options, and try setting the quality level to **Normal**. See Printing on page 72.
2. The issue may be related to orientation. Try rotating the image: you may find that the result looks better.

Edges of objects are darker than expected

The following steps provide the complete procedure for this topic.

1. If edges of objects seem darker than expected, and you have already set the print-quality slider to **Quality** in the driver dialog, select the custom print-quality options, and try setting the quality level to **Normal**. See Printing on page 72.
2. The issue may be related to orientation. Try rotating the image: you may find that the result looks better.

Horizontal lines at the end of a cut sheet print

The following steps provide the complete procedure for this topic.

This type of defect affects only the end of a print, within approximately 30 mm of the trailing edge of the paper. You may see some very thin horizontal lines across the print.

To avoid this problem:

1. Consider using larger margins around your image.
2. Print the Image Diagnostics Print. See Image Diagnostics Print on page 223.
3. Consider printing with roll paper.

Vertical lines of different colors

The following steps provide the complete procedure for this topic.

If your print has vertical bands of different colors along it:

1. Try using thicker paper, choosing from the recommended paper types such as HP Heavyweight Coated Paper and HP Super Heavyweight Paper. See Order paper on page 189.
2. Try using higher print-quality settings (see Printing on page 72). For instance, if you have set the Print Quality slider to **Speed**, try setting it to **Quality**.

White spots on the print

The following steps provide the complete procedure for this topic.

You may notice white spots on the print. This is probably due to paper fibers, dust, or loose coating material. To avoid this problem:

1. Try cleaning the paper manually with a brush before printing, to remove any loose fibers or particles.
2. Always keep the cover of your printer closed, and avoid actions that may introduce dust into the printer, such as handling or cutting paper on the printer cover.
3. Protect your paper rolls and sheets by storing them in bags or boxes.

Colors are inaccurate

If the colors of your print do not match your expectations, try the following:

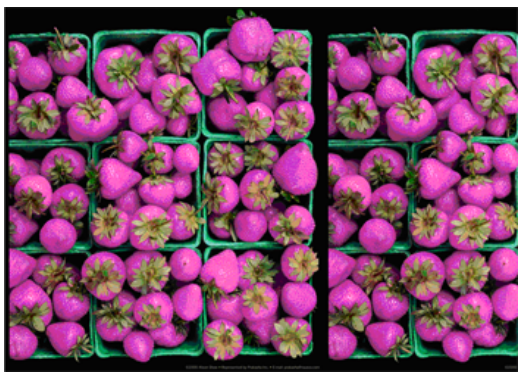

1. Check that the paper type you have loaded corresponds to the paper type selected in the front panel and in your software. See View information about the paper on page 49.

2. Tap , then ··· , then, , then **Calibration Status** to check the color calibration status. If the status is PENDING or OBSOLETE, you should perform color calibration: see Color calibration on page 134. If you have made any changes, you may wish to reprint your job in case the problem has been solved.

3. Check that you are printing on the correct side of the paper.

4. Check that you are using appropriate print-quality settings (see Printing on page 72). If you have selected the **Speed** or **Fast** options, you may not get the most accurate colors. If you change the print-quality settings, you may wish to reprint your job at this point in case the problem has been solved.

5. If you are using Application Color Management, check that the color profile you are using corresponds to the selected paper type and print-quality settings. If you have doubts about which color settings to use, see Color management on page 133.

6. If a grayscale image shows a color cast in some of the gray shadows, click **Color** > **Grayscale** in the driver.

7. If the problem consists of color differences between your print and your monitor, try calibrating your monitor. At this point, you may wish to reprint your job in case the problem has been solved.

8. Print the Image Diagnostics Print. See Image Diagnostics Print on page 223.

If the problem persists despite all the above actions, contact your customer service representative for further support.

Colors are fading

If you print on instant-dry photo paper, your prints will fade rapidly. If you plan to display the prints for more than two weeks, you should laminate them to achieve longer life.

Alternatively, prints on swellable coated papers such as HP Universal Gloss Photo Paper or HP Universal Satin Photo Paper will fade much less rapidly.

Lamination can increase the life of prints on all paper types, depending on the type of lamination. For more information, consult your laminate provider.

Image is incomplete (clipped at the bottom)

This topic explains the concepts involved in this subject.

- Did you tap before all the data were received by the printer? If so, you have ended the data transmission and will have to print the page again.
- The **I/O timeout** setting may be too short. This setting determines how long the printer waits for the computer to send more data, before deciding that the job is finished. From the front panel, increase the **I/O timeout** setting to a longer period and then send the print again. Tap , then **Connectivity** > **Network** > **I/O timeout**.
- There may be a communications problem between your computer and the printer. Check your USB or network cable.
- Check to make sure that your software settings are correct for your current page size (for example, long-axis prints).

- If you are using network software, make sure it has not timed out.

Image is clipped

Clipping normally indicates a discrepancy between the actual printable area on the loaded paper and the printable area as understood by your software.

You can often identify this kind of problem before printing by previewing your print (see Preview a print on page 82).

- Check the actual printable area for the paper size you have loaded.

  printable area = paper size - margins

- Check what your software understands to be the printable area (which it may call "printing area" or "imageable area"). For example, some software applications assume standard printable areas that are larger than those used in this printer.
- If you have defined a custom page size with very narrow margins, the printer may impose its own minimal margins, clipping your image slightly. You may want to consider using a larger paper size.
- If your image contains its own margins, you may be able to print it successfully by using the **Clip Contents by Margins** option (see Select margin options on page 80).
- If you are trying to print a very long image on a roll, check that your software is capable of printing an image of that size.
- If you try to print an image larger than your software can handle, the bottom of the image may be clipped. To print the whole image, try these suggestions:
  - Save the file in another format, such as TIFF or EPS, and open it with another application.
  - Use a RIP to print the file.
- You may have asked to rotate the page from portrait to landscape on a paper size that is not wide enough.
- If necessary, reduce the size of the image or document in your software application, so it fits between the margins.

Some objects are missing from the printed image

This topic explains the concepts involved in this subject.

Large quantities of data may be necessary to print a high-quality large-format print job, and in some specific workflows there may be issues that can lead to some objects missing from the output. Here are some suggestions to help you to avoid this problem:

- Select a smaller page size and scale to the desired final page size in the driver or in the front panel.
- Save the file in another format, such as TIFF or EPS, and open it with another application.
- Use HP Click software to print the file.
- Use a RIP to print the file.
- Try printing from a USB flash drive.

- Reduce the resolution of bitmap images in your application software.
- Select a lower print quality in order to reduce the resolution of the printed image.

NOTE: If you are working under Mac OS X, not all of these options are available.

These options are suggested for troubleshooting purposes and may adversely affect the final output quality or the time necessary to generate the print job. Therefore, they should be canceled if they do not help to solve the problem.

Lines are too thick, too thin or missing

The following steps provide the complete procedure for this topic.

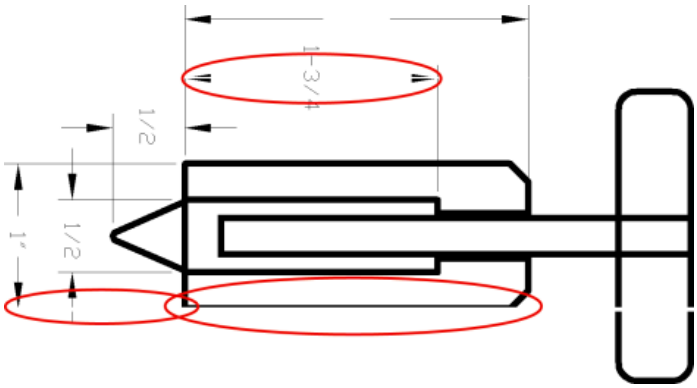

1. Check that the paper type you have loaded corresponds to the paper type selected in the front panel and in your software. See Lines are too thick, too thin or missing on page 219.
2. Check that you are using appropriate print-quality settings for your purposes (see Printing on page 72). Select the custom print-quality options in the driver dialog, and try turning on the **Maximum detail** option (if available). You may wish to reprint your job at this point in case the problem has been solved.
3. If the resolution of your image is greater than the printing resolution, you may notice a loss of line quality.
4. If lines are too thin or missing, print the Image Diagnostics Print. See Image Diagnostics Print on page 223.
5. If the problem remains, go to the front panel and tap , then **Printhead alignment** to align the printheads. See Align the printhead on page 228. After alignment, you may wish to reprint your job in case the problem has been solved.
6. Go to the front panel and tap , then perform paper advance calibration: see Recalibrate the paper advance on page 208.

If the problem persists despite all the above actions, contact your customer service representative for further support.

Lines appear stepped or jagged

The following steps provide the complete procedure for this topic.

If lines in your image appear stepped or jagged when printed:

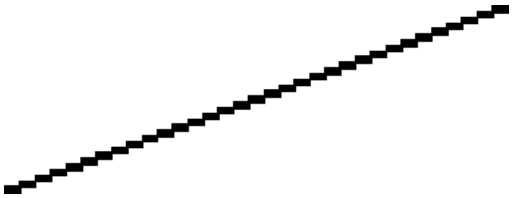

1. The problem may be inherent in the image. Try to improve the image with the application you are using to edit it.
2. Check that you are using appropriate print-quality settings. See Printing on page 72.
3. Select the custom print-quality options in the driver dialog, and turn on the **Maximum detail** option (if available).

Lines print double or in the wrong colors

The following steps provide the complete procedure for this topic.

This problem can have various visible symptoms:

- Colored lines are printed double, in different colors.

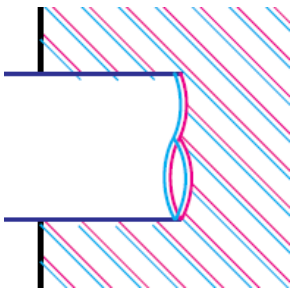

- The borders of colored blocks are wrongly colored.

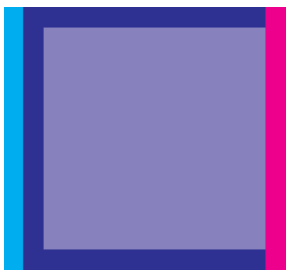

To correct this kind of problem:

1. Reseat the printheads by removing them and then reinserting them. See Remove the printhead on page 169 and Insert the printhead on page 174.
2. Align the printheads. See Align the printhead on page 228.

Lines are discontinuous

The following steps provide the complete procedure for this topic.

If your lines are broken in the following way:

1. Check that you are using appropriate print-quality settings. See Printing on page 72.
2. Reseat the printheads by removing them and then reinserting them. See Remove the printhead on page 169 and Insert the printhead on page 174.
3. Align the printheads on the paper that you have the issue with. See Align the printhead on page 228.

Lines are blurred

Humidity can cause ink to soak into the paper, making the lines blurred and fuzzy. Try the following:

1. Check that your environmental conditions (temperature, humidity) are suitable for high-quality printing. See Environmental specifications on page 242.
2. Check that the paper type selected in the front panel is the same as the paper type you are using. See View information about the paper on page 49.
3. Select the custom print-quality options, then select **Best** and **Maximum detail** (if available). See High-quality printing on page 82.
4. Try changing to a heavier paper type, such as HP Heavyweight Coated Paper or HP Super Heavyweight Plus Matte Paper.
5. Select a paper type that is slightly thinner than the paper you have loaded; this will cause the printer to use less ink. Here are some example paper types in ascending order of thickness: Plain Paper, Coated Paper, Heavyweight Coated Paper, Super Heavyweight Plus Matte Paper.
6. If you are using glossy paper, try changing to a different type of glossy paper.

7. Align the printheads. See Align the printhead on page 228.

Line lengths are inaccurate

If you have measured your printed lines and find that the lengths are not sufficiently accurate for your purposes, you can try to improve line length accuracy in the following ways:

1. Print on HP Matte Film, for which your printer's line length accuracy is specified. See Functional specifications on page 239.

   Polyester film is about ten times more dimensionally stable than paper. However, using film that is thinner or thicker than HP Matte Film will reduce line length accuracy.

2. Set the Print Quality slider to **Quality**.

3. Maintain the room at a steady temperature between 10 and 30 degrees C (50 and 86 degrees F).

4. Load the roll of film and let it rest for five minutes before printing.

5. If you are still not satisfied, try recalibrating the paper advance. See Recalibrate the paper advance on page 208.

Image Diagnostics Print

The Image Diagnostics Print consists of patterns designed to highlight printhead reliability problems.

It helps you to check the performance of the printheads that are currently installed in your printer, and whether any printhead suffers from clogging or other problems.

Procedure

To print the Image Diagnostics Print:

1. Use the same paper type that you were using when you detected a problem.
2. Check that the selected paper type is the same as the paper type loaded into the printer. See View information about the paper on page 49.
3. At the printer's front panel, tap , then **Print diagnostic**.

It takes about two minutes to print the Image Diagnostics Print.

The print is divided into two parts, both of which test printhead performance:

- Part 1 (top) consists of rectangles of pure colors, one for each printhead. This part represents the print quality that you will get from each color.
- Part 2 (bottom) consists of small dashes, one for each nozzle on each printhead. This part complements the first, and aims more specifically to detect how many faulty nozzles each printhead has.

Look carefully at the print. The names of the colors are shown above the rectangles and in the center of the patterns of dashes.

First look at the upper part of the print (part 1). Each colored rectangle should be a uniform color without any horizontal lines across it.

Then look at the bottom part of the print (part 2). For each individual colored pattern, check that most of the dashes are present.

If you see horizontal lines in part 1 and also missing dashes in part 2 for the same color, the printhead responsible needs cleaning. However, if the rectangles look solid, do not worry about just a few missing dashes in part 2; these are acceptable because the printer can compensate for a few clogged nozzles.

Here is an example of a gray printhead in a good state:

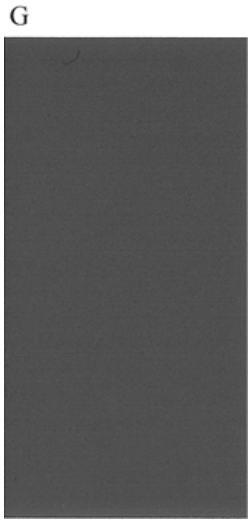

And here is an example of the same printhead in a bad state:

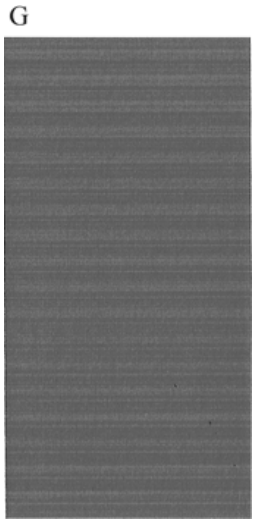

Corrective action

The following steps provide the complete procedure for this topic.

1. Clean any faulty printheads (see Clean the printhead on page 227). Then reprint the Image Diagnostics Print to see whether the problem has been solved.
2. If the problem remains, clean the printheads again, and reprint the Image Diagnostics Print to see whether the problem has been solved.
3. If the problem remains, consider cleaning your printheads manually (see Clean the printhead on page 227). You could also try reprinting your current print job, in case it now prints satisfactorily.
4. If the problem still remains, replace any persistently faulty printheads (see Handling ink cartridges and printhead on page 164), or contact HP Support (see Contact HP Support on page 238).

If you still have a problem

This topic explains the concepts involved in this subject.

If you still experience print-quality problems after applying the advice in this chapter, here are some further things that you can do:

- Try using a higher print-quality option. See Printing on page 72.
- Check the driver you are using to print with. If it is a non-HP driver, consult the driver vendor about the problem. You could also try using the correct HP driver, if feasible. The latest HP drivers can be downloaded from http://www.hp.com/go/DesignJetT2600/drivers.
- If you are using a non-HP RIP, its settings may be incorrect. See the documentation that came with the RIP.
- Check that your printer's firmware is up to date. See Update the firmware on page 180.
- Check that you have the right settings in your software application.

18 Troubleshooting ink cartridge and printhead issues

The following sections provide details for this topic.

Cannot insert an ink cartridge

The following steps provide the complete procedure for this topic.

1. Check that you have the correct type of cartridge (model number).
2. Check that the colored label on the cartridge is the same color as the label on the slot.
3. Check that the cartridge is correctly oriented, with the letter or letters marking the cartridge label right-side up and readable.

⚠ **CAUTION:** Never clean inside the ink cartridge slots.

Ink cartridge status messages

These are the possible ink cartridge status messages:

- **OK**: The cartridge is working normally, with no known problems.
- **Missing**: There is no cartridge present, or it is not correctly connected to the printer.
- **Low**: The ink level is low.
- **Very low**: The ink level is very low.
- **Empty**: The cartridge is empty.
- **Reseat**: You are recommended to remove the cartridge and then reinsert it.
- **Replace**: You are recommended to replace the cartridge with a new cartridge.
- **Expired**: It is past the cartridge's expiration date.
- **Incorrect**: The cartridge is not compatible with this printer. The message includes a list of compatible cartridges.
- **Non-HP**: The cartridge is used, refilled, or counterfeit.

Cannot insert the printhead

The following steps provide the complete procedure for this topic.

1. Check that you have the correct type of printhead (model number).
2. Check that the printhead is correctly oriented.
3. Check that you have correctly closed and latched the printhead cover, see Insert the printhead on page 174.

The front-panel display recommends reseating or replacing the printhead

The following steps provide the complete procedure for this topic.

1. Remove the printhead, see Remove the printhead on page 169.
2. Clean the electrical connections on the backside of the printhead with a lint-free cloth. If moisture is needed to remove residue, do not use water-based cleaners in the electrical contacts: such cleaners may damage electrical circuits. In some locations the use of cleaner products is regulated. Ensure that your cleaner follows federal, state, and local regulations.

   ⚠ **CAUTION:** This is a delicate process and may damage the printhead. Do not touch the nozzles on the bottom side of the printhead, especially not with any alcohol.

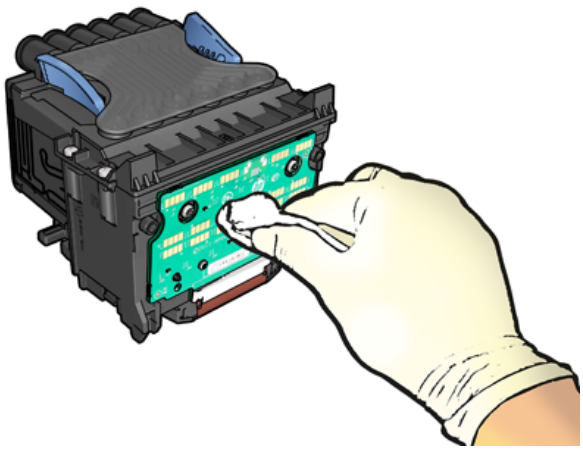

3. Reinsert the printhead, see Insert the printhead on page 174.
4. Check the front-panel display message. If the problem remains, try a new printhead.

Clean the printhead

As long as the printer is kept turned on, automatic cleaning is performed periodically.

This ensures there is fresh ink in the nozzles and prevents nozzle clogs, thus preserving print quality. If you have print quality problems, please see Image Diagnostics Print on page 223 before proceeding.

To clean the printhead, go to the front panel and tap , then **Printheads**, and select the color group including the color that needs cleaning (**Clean all**, **Clean MK-Y**, **Clean C-M-PK-G**).

Align the printhead

The following steps provide the complete procedure for this topic.

Precise printhead alignment is essential for accurate colors, smooth color transitions, and sharp edges in graphical elements. Your printer has an automatic printhead alignment process which runs whenever the printhead has been accessed or replaced.

You may need to align the printhead after a paper jam or if you are experiencing print-quality problems.

1. Load the paper you wish to use, see Paper handling on page 36. You can use a roll or a cut sheet; plain white paper is recommended.

   CAUTION: Do not use transparent or semi-transparent paper to align the printhead. HP recommends plain or bond paper.

2. Ensure that the scanner is lowered, as a strong light source near the printer during printhead realignment can affect alignment.

3. From the front panel, tap , then **Align printheads**.

   NOTE: Printhead alignment can also be started from the Embedded Web Server (**Support** > **Print Quality Troubleshooting**), or from the HP Utility (Windows: **Support** > **Print Quality Troubleshooting**; Mac OS X: **Information and Print Quality** > **Align**).

4. If the loaded paper is satisfactory, the printer runs the realignment and prints a realignment pattern.

5. The process takes about five minutes. Wait until the front-panel display shows the process complete before using the printer.

If the printer cannot complete the printhead alignment successfully, you may be asked to clean the printhead and try again.

Printhead status messages

These are the possible printhead status messages:

- **OK**: The printhead is working normally, with no known problems
- **Missing**: There is no printhead present, or it is not correctly installed in the printer.
- **Reseat**: You are recommended to remove the printhead and then reinsert it. If that fails, clean the electrical connections, see The front-panel display recommends reseating or replacing the printhead on page 227. If that fails, replace the printhead with a new printhead, see Remove the printhead on page 169 and Insert the printhead on page 174.
- **Replace**: The printhead is failing. Replace the printhead with a working printhead, see Remove the printhead on page 169 and Insert the printhead on page 174.
- **Replacement incomplete**: The printhead replacement process has not completed successfully; re-launch the replacement process and let it finish completely.
- **Remove**: The printhead is not a suitable type for use in printing.
- **Non-HP ink**: Ink from a used, refilled, or counterfeit ink cartridge has passed through the printhead. See the limited warranty document provided with your printer for details of the warranty implications.

19 Troubleshooting general printer issues

The following sections provide details for this topic.

Printer does not print

This topic explains the concepts involved in this subject.

If all is in order (paper loaded, all ink components installed and no file errors), there are still reasons why a file you have sent from your computer may not start printing when expected:

- You may have an electrical power problem. If there is no activity at all from the printer, and the front panel does not respond, check that the power cable is connected correctly and that there is power available at the socket. Press the power key for 5 seconds to reset the printer.
- You may be experiencing unusual electromagnetic phenomena, such as strong electromagnetic fields or severe electrical disturbances, which can cause the printer to behave strangely or even stop working. In this case, turn off the printer using the power key on the front panel and unplug the power cord, wait until the electromagnetic environment has returned to normal, then turn it on again. If you still experience problems, contact your support representative.
- Nesting may be on, and the printer is waiting for the specified nest wait time before calculating the appropriate nests. In this case, the front panel shows the remaining time needed for nesting.
- You may have the wrong graphic language setting, see Change the graphic language setting on page 33.
- You may not have installed in your computer the correct driver for your printer, see the *Assembly instructions*.
- If you are printing on a sheet, you must specify **Single sheet** as the paper source in your printer driver.
- The printer may be holding the job for suitable paper (see On hold for paper on page 200) or accounting ID information (see Require account ID on page 31).
- You may have requested a print preview from your printer driver. This is a function you can use to check that the image is the one you want. In this case, the preview is displayed on your screen, and you must click the **Print** button to start printing.

Front panel fails to initialize

If the printer will not start (the front panel is blank or the diagnostic LEDs are all off), you are recommended to replace the firmware, in the following way:

1. Go to the HP Support Center (see HP Support Center on page 236) and download the firmware.

2. Save the firmware on a USB flash drive. Ideally, the USB flash drive should be empty and formatted with the FAT filesystem.
3. Ensure that the printer is turned off. Connect the USB flash drive to the Hi-Speed USB host port beside the front panel, then turn the printer on.
4. The printer takes about a minute to read the firmware file, then asks you to remove the USB flash drive.
5. The printer automatically installs the new firmware and restarts.

Printer seems slow

This topic explains the concepts involved in this subject.

Here are some possible explanations:

- Did you set the print quality to **Best** or **Maximum detail**? Best-quality and maximum detail prints take longer.
- Did you specify the correct paper type when loading the paper? Some paper types require more time for printing; for example, photo and coated papers require more drying time between passes. To find out the printer's current paper type setting, see View information about the paper on page 49.
- If your printer is connected by network, check that all components used in the network (network interface cards, hubs, routers, switches, cables) are capable of high-speed operation. Is there a lot of traffic from other devices on the network?
- Did you specify **Extended** drying time in the front panel? Try changing the drying time to **Optimal**.

Communication failures between computer and printer

This topic explains the concepts involved in this subject.

Some symptoms are:

- The front-panel display does not show the **Receiving** message when you have sent an image to the printer.
- Your computer displays an error message when you are trying to print.
- Your computer or printer hangs (stays idle), while communication is taking place.
- Your printed output shows random or inexplicable errors (misplaced lines, partial graphics etc.)

To solve a communication problem:

- Ensure that you have selected the correct printer in your application, see Printing on page 72.
- Ensure that the printer works correctly when printing from other applications.
- Remember that very large prints may take some time to receive, process and print.
- If your printer is connected to your computer through any other intermediate devices, such as switch boxes, buffer boxes, cable adapters, cable converters, and so on, try using it when connected directly to your computer.

- Try another interface cable.
- Ensure that the graphic language setting is correct, see Change the graphic language setting on page 33.
- If the printer is connected by network, check that your printer has a static IP address. If it is using DHCP, the IP address may change every time it is turned on, in which case the driver may not be able to find it.

Cannot access the Embedded Web Server

If you still cannot connect, turn the printer off and back on with the power key on the front panel.

If you have not done so already, read Embedded Web Server on page 14.

From the front panel, tap ⚙, then **Security** > **Embedded Web Server**.

If you are using a proxy server, try bypassing the server and accessing the Web server directly:

- In Internet Explorer 6 for Windows, go to **Tools** > **Internet Options** > **Connections** > **LAN Settings**, and check the **Bypass proxy server for local addresses** box. Alternatively, for more precise control, click the **Advanced** button and add the printer's IP address to the list of exceptions, for which the proxy server is not used.
- In Safari for Mac OS X, go to **Safari** > **Preferences** > **Advanced** and click the **Proxies: Change Settings** button. Add the printer's IP address or its domain name to the list of exceptions, for which the proxy server is not used, in the **Bypass proxy settings for these Hosts & Domains** field.

Cannot connect to the Internet

If your printer has difficulty in connecting to the Internet, it may start the Connectivity Wizard automatically.

The Connectivity Wizard performs a series of tests automatically.

If any test fails, the printer describes the problem and recommends how to solve it. You can modify settings and rerun the test, unless the settings are protected.

Web Services issues

For any issues with HP ePrint.

See HP Connected: http://www.hpconnected.com.

Automatic file system check

When you turn on the printer, you will occasionally see a front panel message: **File system check**.

A file system check is taking place; it can take up to 40 minutes. Please wait until it finishes.

⚠ **CAUTION:** If you turn the printer off before the file system check has finished, the file system could be seriously damaged, making the printer's hard disk unusable. In any case, the file system check will restart from the beginning whenever you turn the printer on again.

A file system check is scheduled every 90 days, in order to maintain the hard disk's file system integrity.

NOTE: When the printer is powered back on, it takes about three minutes to initialize and check and prepare the printheads. However, it can take up to 40 under some conditions, for example, when the printer has not been used for a long period of time and requires more time to prepare the printheads.

Alerts

This topic explains the concepts involved in this subject.

Your printer can communicate two types of alerts:

- **Errors:** Mainly alerting you to the fact that the printer is unable to work normally. However, in the printer driver, errors can also alert you to conditions that could ruin the print, such as clipping, even if the printer is able to print.
- **Warnings:** Alert you when the printer needs attention either for an adjustment, such as a calibration or for a possible unprintable situation, such as a preventive maintenance or low ink.

There are four different alerts communicators within your printer's system:

- **Front-panel display:** The front panel shows only the most relevant alert at a time. In the case of a warning, it disappears after a timeout. There are permanent alerts, such as "ink cartridge low on ink", that reappear when the printer becomes idle and there is not another more severe alert.

  TIP: From the front panel display you can configure paper mismatch alerts, see Solve paper mismatch on page 97.

- **Embedded Web Server:** The upper-right corner of the Embedded Web Server window shows the printer status. If there is an alert in the printer, the status shows the alert text.
- **Driver:** The driver warns about job configuration settings that may produce a problem in the final output. If the printer is not ready to print, it displays a warning.
- **HP DesignJet Utility:** To see alerts, go to the **Overview** tab and review the **Items needing attention** list on the right-hand side.

  By default, alerts are displayed only when you are printing. If alerts are enabled and there is a problem that prevents a job from completing, you see a pop-up window, which explains the reason for the problem. Follow the instructions to achieve your required result.

20 Front-panel error messages

The printer may occasionally display a system error, consisting of a numerical code of 12 digits followed by the recommended action that you should take.

In most cases you will be asked to restart the printer, because when the printer starts it can diagnose the issue better and may be able to fix it automatically. If the problem persists after restarting, you should contact your support representative and be ready to give the numerical code from the error message.

If the error message contains some other recommended action, follow the printer's instructions.

System error log

The printer saves a log of system errors that you can access in the following way.

Using a USB flash drive

The following steps provide the complete procedure for this topic.

1. Take a standard USB flash drive, formatted as FAT32.
2. Create an empty file in the USB flash drive (right-click, **New** > **Text Document**), and name it `pdipu_enable.log`.
3. When an error message is displayed on the front panel, insert the USB flash drive into the Hi-Speed USB host port at the front of the printer. The log is automatically copied into the drive. You can remove the USB flash drive when prompted by the front panel.
4. Contact your support representative (see Contact HP Support on page 238) to share the file created in the USB flash drive.

Using the Embedded Web Server

The following steps provide the complete procedure for this topic.

1. In your Web browser, go to **https://***printer IP address***/hp/device/support/serviceSupport**.
2. Click the **Download** button to get the Diagnostic package.
3. Save the package in your computer and contact your support representative (see Contact HP Support on page 238).

21 HP Customer Care

The following sections provide details for this topic.

Introduction

HP Customer Care offers award-winning support to ensure you get the most from your HP DesignJet, providing comprehensive, proven support expertise and new technologies to give you unique end-to-end support.

Services include setup and installation, troubleshooting tools, warranty upgrades, repair and exchange services, phone and Web support, software updates and self-maintenance services. To find out more about HP Customer Care, see Contact HP Support on page 238.

To register your warranty, visit http://register.hp.com/.

HP Professional Services

The following sections provide details for this topic.

HP Support Center

Enjoy a world of dedicated services and resources to ensure you always get the best performance from your HP DesignJet printers and solutions.

Join the HP community at the HP Support Center, your large-format printing community, for 24×7 access to:

- Multimedia tutorials
- Step-by-step how-to guides
- Downloads: the latest printer firmware, drivers, software, paper presets, etc.
- Technical support: online troubleshooting, customer care contacts and more
- Workflows and detailed advice for completing various printing tasks from particular software applications
- Forums for direct contact with the experts, both HP and your colleagues
- Warranty tracking online, for your peace of mind
- Latest product information: printers, supplies, accessories, software, etc.
- Supplies Center for all you need to know about ink and paper

The HP Support Center can be found at http://www.hp.com/go/DesignJetT2600/support.

By customizing your registration for the products you have purchased and your type of business, and by setting your communication preferences, you decide the information you need.

Download printer software

Be sure to follow the software installation instructions.

Install the printer software from http://www.hp.com/go/DesignJetT2600/drivers.

HP Care Packs and Warranty Extensions

HP Care Packs and Warranty Extensions allow you to extend your printer's warranty beyond the standard period.

They include remote support. On-site service is also provided if necessary, with two alternative response-time options:

- Next business day
- Same business day, within four hours (may not be available in all countries)

There is an HP Installation service that unpacks, sets up, and connects the printer for you.

For more information on HP Care Packs, see http://cpc.ext.hp.com/portal/site/cpc.

Customer Self Repair

HP's Customer Self Repair program offers our customers the fastest service under either warranty or contract. It enables HP to ship replacement parts directly to you (the end user) so that you can replace them. Using this program, you can replace parts at your own convenience.

Convenient, easy to use

- An HP Support Specialist will diagnose and assess whether a replacement part is required to address a defective hardware component.
- Replacement parts are express-shipped; most in-stock parts are shipped the very same day you contact HP.
- Available for most HP products currently under warranty or contract.
- Available in most countries.

For more information about Customer Self Repair, see http://www.hp.com/go/selfrepair.

Contact HP Support

HP Support is available to you by telephone. What to do before you call:

- Review the troubleshooting suggestions in this document.
- Review the relevant driver documentation.
- If you have installed third-party software drivers and RIPs, see their documentation.
- If you call your support representative, please have the following information available to help us answer your questions more quickly:
  - The product you are using (the product number and the serial number, found on the label at the back of the product).
  - If there is an error code on the front panel, note it down. See Front-panel error messages on page 233.
  - The computer you are using.
  - Any special equipment or software you are using (for example, spoolers, networks, switch-boxes, modems or special software drivers).
  - The type of interface used on your product (USB or network).
  - The software and driver name and version number that you are currently using.
  - The Printer Service information, which you can get from the Embedded Web Server. In a Web browser, enter the IP address of your printer to access the Embedded Web Server. Then click **Support** > **Service support** > **Service information** > **Display**. If you need to send the information by email, you can download it as a file from your browser, and later send the file.

    NOTE: After you click **Display**, your browser may prevent the pop-up window from opening. In this case, you have to find the browser option that allows the window to open.

    Alternatively, from your browser you can send the page directly: click **File** > **Send** > **Page by email**.

Telephone number

Your HP Support telephone number is available on the Web.

See http://welcome.hp.com/country/us/en/wwcontact_us.html.

22 Printer specifications

The following sections provide details for this topic.

Functional specifications

Table 22-1 HP ink supplies

Supply	Description
Printhead	One printhead, with doubled nozzles for matte black
Ink cartridges	Cartridges containing 130 ml of ink: gray, photo black, matte black, yellow, magenta, and cyan Cartridges containing 300 ml of ink: gray, photo black, matte black, yellow, magenta, and cyan

Table 22-2 Paper sizes

-	Minimum	Maximum
Roll width	279 mm (11 in)	914 mm (36 in)
Roll length		91 m (300 ft)
Roll diameter		140 mm (5.51 in)**
Roll weight		11.9 kg (26.3 lb)
Sheet width	210 mm (8.26 in)	914 mm (36 in)
Sheet length	279 mm (11 in)	1676 mm (66 in)
Sheet width (scanner)		914 mm (36 in)
Sheet length (scanner)		15 m (49.21 ft) at 200dpi, TIFF file format and 24 in width
Roll paper thickness		0.5 mm (19.7 mil)*
Sheet paper thickness		0.5 mm (19.7 mil)*
Paper weight	60 g/m^2	328 g/m^2

* up to 0.6 mm (23.6 mil) printed to the output stacking tray with manual mode.

** Roll core diameter of 51 mm (2 in). Paper with roll core diameter of 76 mm (3 in) can be used with the HP DesignJet 3-in Spindle Adaptor Kit (see 3-in Spindle Adaptor Kit on page 194).

Table 22-3 Printing resolutions

Print quality	Maximum detail	Graphic language	Rendering resolution (ppi)	Printing resolution (dpi)
Best (photo paper*)	On	HP PLC3GUI PostScript/PDF	600 × 600	2400 × 1200
	Off	any	600 × 600	1200 × 1200
Best (other papers)	Off	any	600 × 600	1200 × 1200
Normal	Off	HP PCL3GUI, PostScript/PDF	600 × 600**	1200 × 1200
Fast (heavyweight coated, photo)	Off	HP PCL3GUI, PostScript/PDF	600 × 600**	1200 × 1200
Fast (plain, coated, natural tracing paper)	Off	HP PCL3GUI, PostScript/PDF	600 × 600**	600 × 1200
Economode	Off	any	300 × 300	600 × 1200

* For a list of supported papers, see Order paper on page 189.

** Except Backlit papers (300 × 300 ppi).

Scanner resolutions: 200, 300, 600 ppi.

Table 22-4 Margins

Margin	Measurements
Top, right and left margins	5 mm (0.2 in) (default) / 3 mm (0.1 in) (optional)
Bottom margin (trailing edge)	5 mm (0.2 in) (default) / 3 mm (0.1 in) (optional) (roll) 22 mm (0.87 in) (sheet)

Mechanical accuracy

∓0.1% of the specified vector length or ∓ 0.2 mm (whichever is greater) at 23 degree Celsius (73 degree Fahrenheit), 50-60% relative humidity, on E/A0 printing material in Best or Normal mode with HP Matte Film roll feed.

Table 22-5 Graphic languages supported

HP DesignJet	Languages
T2600MFP	HP PCL3GUI, HP-GL/2 and HP RTL, CALS G4, TIFF, JPEG, URF
T2600MFP PS	HP PCL3GUI, HP-GL/2 and HP RTL, CALS G4, TIFF, JPEG, URF, Adobe PDF 1.7, Adobe PostScript 3

Mobile printing specifications

This topic provides a full set of reference information for this subject.

Table 22-6 Mobile printing

Type	Description
Mobile printing	Yes, directly from Android with HP Print Service Plugin
Mobile devices supported by HP Mobile printing	Smartphones and tablets
Supported operating systems	iOS, Android, Windows
OS Versions	iOS from 7.0 and Android from 4.4, Windows any
Connectivity requirements	Printer and mobile device must use the same network
Supported file formats	PDF, JPEG

Table 22-7 Email printing

Type	Description
Mobile devices supported	Smartphones, tablets, PC
Supported operating systems	Any, as long as it has email
Connectivity requirements	Cloud connection
Cloud features	Remote printing through email
Supported file formats	PDF, JPEG, TIFF
Max file size	10 MB

Physical specifications

This topic provides a full set of reference information for this subject.

Table 22-8 Printer physical specifications

Type	Specifications
Weight	109 kg (240 lb)
Width	1535 mm (60.4 in)
Depth	920 mm (36.2 in) (stacker and basket open) 760 mm (29.9 in) (stacker and basket closed)
Height	1240 mm (48.8 in) (stacker and front panel deployed)

Memory specifications

This topic provides a full set of reference information for this subject.

Table 22-9 Memory specifications

HP DesignJet	Physical DRAM	File-processing memory	Hard disk
T2600MFP Printer Series	8 GB	128 GB	500 GB encrypted

Power specifications

This topic provides a full set of reference information for this subject.

Table 22-10 Printer power specifications

Type	Specifications
Input voltage	100–240 V ac ∓10%, auto-ranging
Frequency	50/60 Hz
Maximum current	< 2 A
Power	< 120 W

Environmental specifications

This topic provides a full set of reference information for this subject.

Table 22-11 Printer environmental specifications

Type	Specifications
Operating temperature	5 to 35 degree Celsius (41 to 95 degree Fahrenheit)
Recommended operating temperature	15 to 35 degree Celsius (59 to 95 degree Fahrenheit), depending on paper type
Storage temperature	-25 to 55 degree Celsius (-13 to 131 degree Fahrenheit)
Recommended operating humidity	20 to 80% RH, depending on paper type
Storage humidity	0 to 95% RH

Acoustic specifications

Declared noise emission levels for the HP DesignJet T2600 Printer Series. Sound pressure levels at bystander positions and sound power levels measured per ISO 7779.

Table 22-12 Printer acoustic specifications

Type	Specifications
Operating sound pressure	42 dB(A) (plain paper, line drawing, normal mode) 51 dB(A) (color scan)
Operating sound power	less than or equal to 5.9 B(A) (plain paper, line drawing, normal mode) less than or equal to 6.6 B(A) (color scan)

Table 22-12 Printer acoustic specifications (continued)

Type	Specifications
Idle sound pressure	32 dB(A) (ready) <17 dB(A) (sleep)
Idle sound power	less than or equal to 4.9 B(A) (ready) <3.5 B(A) (sleep)

Glossary

AppleTalk

A suite of protocols that Apple Computer developed in 1984 for computer networking. Apple now recommends TCP/IP and Bonjour networking instead. HP DesignJet products no longer support AppleTalk.

Bonjour

Apple Computer's trade name for its implementation of the IETF Zeroconf specification framework, a computer network technology used in Apple's Mac OS X from version 10.2 onwards. It is used to discover services available on a local area network. It was originally known as Rendezvous.

Color accuracy

The ability to print colors that match the original image as closely as possible, bearing in mind that all devices have a limited color gamut and may not be physically capable of matching certain colors precisely.

Color consistency

The ability to print the same colors from a particular print job from print to print and from printer to printer.

Color model

A system of representing colors by numbers, such as RGB or CMYK.

Color space

A color model in which each color is represented by a specific set of numbers. Many different color spaces can use the same color model: for instance, monitors generally use the RGB color model, but they have different color spaces, because a particular set of RGB numbers results in different colors on different monitors.

Cutter

A printer component that slides back and forth across the platen to cut the paper.

ESD

ElectroStatic Discharge. Static electricity is common in daily life. It is the spark when touching the car door, or the cling of clothing. Although controlled static electricity has some useful applications, uncontrolled electrostatic discharges are one of the main hazards to electronic products. Therefore, to prevent damage some precautions are needed when setting up the printer, or handling ESD sensitive devices. This type of damage may reduce the life expectancy of the device. One way to minimize uncontrolled ESDs, and therefore reduce this type of damage is by touching any exposed grounded part of the printer (mainly metal parts) before handling ESD sensitive devices (such as the printheads or ink cartridges). Additionally, to reduce the generation of electrostatic charge in your body try to avoid working in a carpeted area, and keep your body movements to a minimum when handling ESD sensitive devices. Also, avoid working in low humidity environments.

Ethernet
A popular computer networking technology for local area networks.

Firmware
Software that controls your printer's functionality and is stored semi-permanently in the printer (it can be updated).

Gamut
The range of colors and density values reproducible on an output device, such as a printer or monitor.

Gigabit Ethernet
An Ethernet network capable of transferring data at up to 1,000,000,000 bits/second. Gigabit Ethernet interfaces are capable of negotiating slower speeds when required for compatibility with older Ethernet devices.

HP RTL
HP Raster Transfer Language: a language defined by HP to describe raster (bitmap) graphics.

HP-GL/2
HP Graphics Language 2: a language defined by HP to describe vector graphics.

I/O
Input/Output: this term describes the passing of data between one device and another.

ICC
The International Color Consortium, a group of companies that have agreed on a common standard for color profiles.

Ink cartridge
A removable printer component that stores ink of a particular color and provides it to the printhead.

IP address
May mean an IPv4 address (most likely) or an IPv6 address.

IPSec
A sophisticated mechanism for providing network security by authenticating and encrypting IP packets sent between nodes on a network. Each network node (computer or device) has an IPSec configuration. Applications are usually unaware whether IPSec is being used or not.

IPv4 address
A unique identifier that identifies a particular node on an IPv4 network. An IPv4 address consists of four integers separated by full stops. Most networks in the world use IPv4 addresses.

IPv6 address
A unique identifier that identifies a particular node on an IPv6 network. An IPv6 address consists of up to 8 groups of hexadecimal digits separated by colons. Each groups contains up to 4 hexadecimal digits. Only a few new networks in the world use IPv6 addresses.

Jetdirect
HP's brand name for its series of print servers that allow a printer to be connected directly to a local area network.

LED

Light-Emitting Diode: a semiconductor device that emits light when electrically stimulated.

MAC address

Media Access Control address: a unique identifier used to identify a particular device on a network. It is a lower-level identifier than the IP address. Thus, a device may have both a MAC address and an IP address.

Network

A network is a set of connections that pass data between computers and devices. Every device is able to communicate with every other device in the same network. This allows data to be moved between computers and devices, and allows devices such as printers to be shared between many computers.

Nozzle

One of many tiny holes in a printhead through which ink is deposited onto the paper.

Paper

A thin, flat material made to be written or printed on; most commonly made from fibers of some kind which are pulped, dried and pressed.

Platen

The flat surface within the printer over which the paper passes while it is being printed on.

Printer driver

Software that converts a print job in a generalized format into data suitable for a particular printer.

Printhead

A removable printer component that takes ink of one or more colors from the corresponding ink cartridge(s) and deposits it on the paper, through a cluster of nozzles. In your printer, each printhead prints two different colors.

Spindle

A rod that supports a roll of paper while it is being used for printing.

TCP/IP

Transmission Control Protocol/Internet Protocol: the communications protocols on which the Internet is based.

USB

Universal Serial Bus: a standard serial bus designed to connect devices to computers.

USB host port

A rectangular USB socket such as those on found on computers. A printer can control USB devices that are connected to such a port. Your printer has two USB host ports, which it uses to control accessories and USB flash drives.

Index

A

accessories
  order 192
account ID
  requiring 31
accounting 158
acoustic specifications 242
Acrobat Pro, print 145
Acrobat Reader, print 144
alerts
  errors 232
  warnings 232
AutoCAD, print presentation 152

B

basket 49
  output problems 207
black and white 137
blurred lines 221

C

calibration
  color 134
  scanner 186
caution 5
clean the platen 214
clean the printer 178
clipped at bottom 217
clipped image 218
color
  advantages 133
  calibration 134
  CMYK 133
  inaccurate 216
  profile 133
  RGB 133
color management
  from front panel 138
  options 136
  process 133
computer communication
  printer/computer
    communications issues 63, 230
configure
  HP ePrint connectivity 22
copy mode 113
copying 113
cost assignment 162
crop lines 83
Customer Care 235
Customer Self Repair 237
cutter
  on/off 52

D

delayed printing 64
demo prints 14
DHCP settings 57
dim mode 11
disk wipe 182
DNS settings 57
draft printing 82
driver preferences 33
drying time
  change 52

E

economize
  on ink 86
  on paper 83
email printing 240
  enable HP ePrint 21
  HP ePrint job policies 22
email server
  configure 28
Embedded Web Server 14
  accessibilty 35
  cannot access 64, 231
  cost assignment 162
  usage per job 161
environmental specifications 242
erase files securely 181
error messages
  log 234

F

file erase, secure 181
file system check 231
firewall status 57
firmware update
  manual setup 22
front panel
  accessibility 35
  language 12
front panel option
  align printheads 228
  auto-off due to inactivity 12
  clean printhead 227
  display brightness 12
  drying time 52
  Embedded Web Server 64
  enable 51
  form feed and cut 52
  horizontal cutter 52
  language 12
  move paper 51
  printer sleep 12
  printhead information 169
  printing & management 64
  replace 165, 169
  speaker volume 12
  unit selection 12
  unload paper 43
front panel will not start 229
front view 7
front-panel option
  account ID required 31
  adjust paper advance 208
  black point compensation 138
  calibrate paper advance 208
  CMYK source profile 138
  color calibration 134
  Embedded Web Server 231

enable crop lines 83
enable economode 82
enable maximum detail 83
I/O timeout 217
margins layout 80
merge 81
nest options 86
PANTONE emulation 138
print diagnostic 223
print in color 138
print in grayscale 138
print quality 77
pure black and white 138
rendering intent 138
reset calibration 209
resize 81
RGB source profile 138
select graphics language 33
select paper type 198
front-panel options
date and time options 12
firmware update 12
language 12
restore factory settings 12
functional specifications 239

G

graininess 211
graphic languages 239
gray shades 137

H

hard disk specification 241
HP Care Packs 236
HP Customer Care 235
HP DesignJet Utility
access 13
HP ePrint
enable 21
HP ePrint connectivity
configure 22
HP ePrint policies
printing 22
HP Print Preview 13
HP Support Center 236
HP Utility
access 13
cannot access 64

I

image problems
clipped at bottom 217
clipped image 218
missing objects 218
import paper preset 50
ink
economical use of 86
usage 161
ink cartridge
about 164
cannot insert 226
insert 167
maintenance 178
order 189
remove 165
specification 239
status messages 226
Internet connection
troubleshooting 231
IP address 57
IPSEC status 57
IPV6 settings 57

J

job deletion 98
job details 96
job queue options 98
job, when to print 96

L

labels, warning 5
language 12
line length accuracy 222
line thickness 219
link speed 57
load paper
general advice 36
roll cannot load 196
roll into printer 39
roll onto spindle 37
sheet 44
sheet cannot load 196

M

maintenance kits 181
margins 80
specification 239
mechanical accuracy 239
memory specifications 241
misaligned colors 220
mobile printing 240
mobile specifications 91, 240
move the printer 179

N

nesting
turn on and off 85
network
connect mac 20
network folder
cannot access 130
networks
link speed 57
protocols 57
security settings 57

O

on hold for paper
enable/disable 200
order
accessories 192
ink cartridges 189
paper 189
printhead 189
overlapping lines 81
overnight printing 87

P

PANTONE emulation 137
paper
clean cut 52
cut after printing 207
displaying information 51
download presets 50
economical use of 83
incorrect out of paper 206
jam due to cut strip 206
jam in platen 201
jam in stacker 206
loading error messages 197
maintenance 51
movement 51
not cut well 207
not flat 212
output problems in basket 207
print on loaded paper 80, 199
printed on wrong paper 199
retained by printer 207
roll loose on spindle 207
select type 80
sizes (max and min) 239
stacker unexpectedly full 206
usage 161
view information 49
paper mismatch 97
paper types 189
pause the queue 96

Photoshop, print 147
Photoshop, print
presentation 153
physical specifications 241
platen cleaning 214
PostScript upgrade 194
power
on/off 8
power specifications 242
preferences, Windows driver 33
preview a print 82
print & copy queue 93
print from
My Home Folder 75
printer driver 76
USB flash drive 73
print next 96
print now 96
print preview 82
print quality
select 77
print-quality problems
banding 210
black ink comes off 215
black lines on yellow 214
blurred lines 221
bottom of print 215
discontinuous lines 221
edges darker than
expected 215
edges stepped or not
sharp 215
general 210
graininess 211
horizontal lines 210
inaccurate line lengths 222
line thickness 219
misaligned colors 220
paper not flat 212
scratching 212
scuffing 212
stepped lines 219
vertical lines of different
colors 216
white spots 216
printer characteristics 1
printer does not print 229
printer models 2
printer software
Mac OS X airprint
installation 17
Windows installation 16
Windows uninstallation 17
printer software, download 236
printer status 178
printer will not start 229
printhead
about 169
align 228
cannot insert 227
clean; purge 227
insert 174
order 189
remove 169
replace, reseat 227
specification 239
status 169
status messages 228
printhead cleaner
specification 239
printing preferences
default 98
printing resolutions 239
protocols, network 57
proxy server settings 57

R

rear view 7
reprint job 96
rescale a print 81
roll paper
load 39
spindle load 37
roll policies 97

S

safe mode 177
safety labels 5
scale a print 81
scan-quality problems
color differences between CIS
modules 122
color fringing 125
damaged original 127
down-scaling 129
edge detection 129
ghosting 127
inaccurate colors 124
line discontinuities 121
paper advance 126
random vertical lines 120
too much skew 129
variable line thickness 123
vertical black band 20 cm
wide 127
vibration effect 125
wrinkles or folds 120
scanner
calibration 186
can't access network
folder 130
clean glass plate 183
optimize 118
slow scan 130
scanning 104
scanning to AI 110
scratched prints 212
scuffed prints 212
secure file erase 181
security
network settings 57
sheet paper
load 44
sleep mode 12
slow printing 230
software update 181
software, download 236
specifications
acoustic 242
email printing 240
environmental 242
functional 239
graphic languages 239
hard disk 241
ink supplies 239
margins 239
mechanical accuracy 239
memory 241
mobile 240
mobile printing 240
paper size 239
physical 241
power 242
printing resolutions 239
spindle 194
roll load 37
spindle adaptor kit 194
statistics
cost assignment 162
usage per job 161
stepped lines 219
store the printer 179
support services
HP Care Packs 236
HP Customer Care 235
HP Support Center 236
printer software 236
warranty extensions 236

T

TCP/IP settings 57
telephone number 238

U

unattended printing 87

W

warning 5
warning labels 5
warranty extensions 236
Web Services
    troubleshooting 231
Wi-Fi accessory
    data speed 66
    funcionality 66
    more information 71