5000 CombiAir Microwave and Built-in Oven

KOX36506EM



Grill, reheat, bake and microwave. All in one
The 5000 CombiAir Oven merges hot air circulation and turntable with advanced microwave technology to quickly defrost or cook your dish – heating evenly throughout. You can also grill, roast or bake easily with faster cooking times.

Product Benefits & Features



Microwave with Hot Air. For better and faster heating
Microwave with hot air provides dual functions – microwave and convection cooking, which merges hot air circulation and advanced microwave technology so your food is cooked faster and more evenly.



EXPlore. Easy access to your oven's functions
EXPlore allows you to effortlessly control the settings of your oven to know what's happening with your cooking. With the LED display, 5-touch buttons and 2 rotary knobs, you can easily see the time, temperature and progress of your dish.



Your dishes evenly cooked in every corner
Our Even Cooking system circulates heat throughout the oven, ensuring everything cooks evenly. All without the need to turn your dish. This technology helps the oven heat up faster than a conventional oven, saving you time in the kitchen.

Grill function. For faster browning and grilling
Perfect for toasts or crispy dishes, the Grill function is highly efficient to toast, crisp or brown your dishes to precision.

- Electronic touch controls.
- Cooling fan
- Microwave function
- Fan controlled defrosting: Great for delicate items like cream cakes, by using room-temperature air to defrost food in half the time.
- LED digital display
- Isofront® plus triple glazed doors with a heat reflective coating.
- Retractable controls
- Child lock: Oven controls can be locked to prevent misuse, providing safety and peace of mind.
- Turbo grilling
- Inverter microwave technology cooks food evenly, preventing hot spots by spreading heat consistently.

AEG

5000 CombiAir Microwave and Built-in Oven

KOX36506EM

Product Specification

Main Colour	Stainless Steel
Built-in Dimensions (mm) (HxWxD)	450x560x550
Functions (Main Oven)	Defrost, Grill, Grill + microwave (menu), Liquids (menu), Melting (menu), Microwave, Popcorn, Reheat, True fan cooking, True fan cooking + Microwave, Turbo grilling, Turbo grilling + Microwave
Connectivity	No
Total Electricity Loading (W)	2650
Steam Category	No
Timer Type	LUX
Cavity Size (L)	41
Cleaning	Clean enamel
Dimensions (mm) (HxWxD)	455x595x567
Oven control type	Pop in / Pop out flat with sungrind
Max Power Grill - Top Oven (W)	1900
Max power oven, W	2650
Temperature Range	30°C - 250°C
Largest Surface area	1140
Interior light	1, Top halogen
Lamp power (W)	25
Oven Energy Source	Electrical
Product Type	Built-in Electric Oven
Noise (dB)	52

Gross weight (kg)	33
Net weight (kg)	30.3
Main Oven - Shelf Support	Side grids Standard
Cord Length (m)	1.5
Plug or Hardwired	Hardwired connection only
Included Fittings	Grill rack set, Turntable small, Wood screws
Cavity coating	Grey Enamel
N° of cavities	1
PNC	944 005 393
Bar Code	7333394149585
Voltage (V)	220/240
Recommended fuse (A)	16

PSGBOV230DE00001

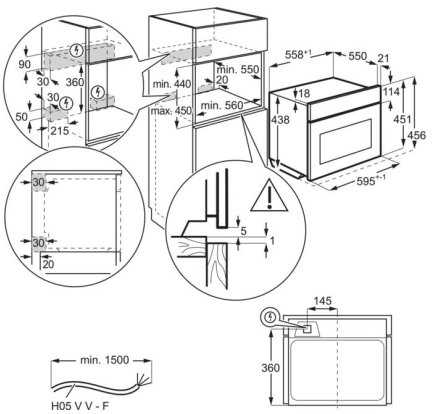

PSGBOV230DE00002

