SKG

Knee Massager
WS500

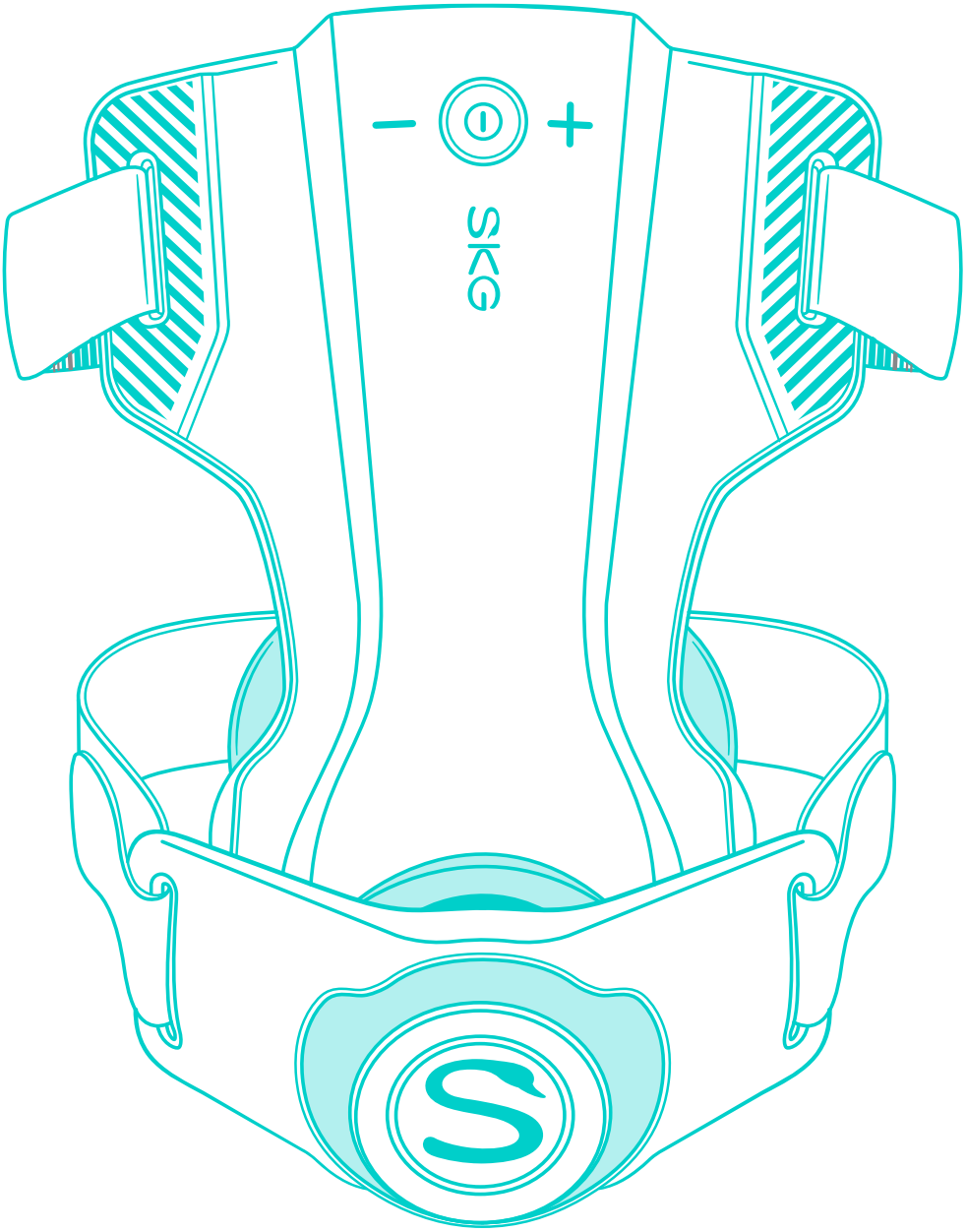

USER MANUAL

Enjoy the power-on experience

EN

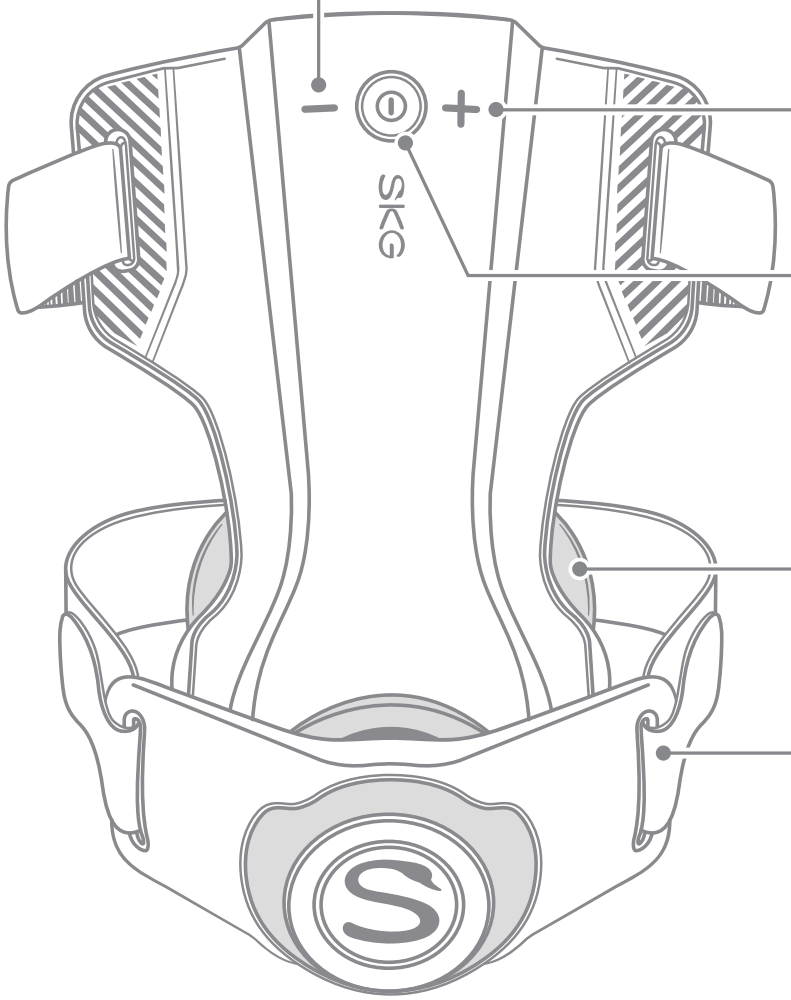

" – "Button
Decrease Hot Compress Level

" + "Button
Increase Hot Compress Level

On/Off Button
Long press: Power on/off
Short press: Switch mode

Heating/ Massage area

Adjustable Straps

Indicator Lights

Charging Port

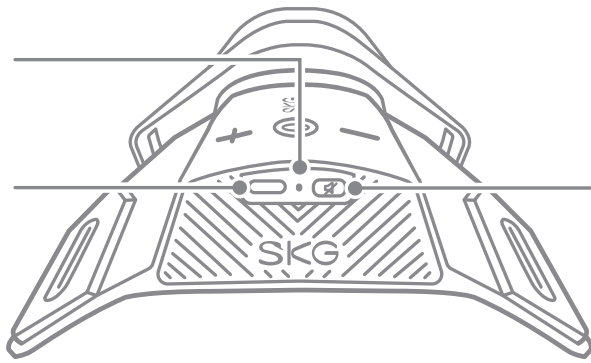

Mute Button

* The schematic diagrams of the products and accessories quoted are for reference only. The actual products shall prevail.

Operating Instructions

EN



Circle "S" facing up and directly over the knee

❶ Please sit comfortably and move your feet half a step forward. When putting the knee brace on your knee, make sure the circle "S" is facing up and aligned with the knee.

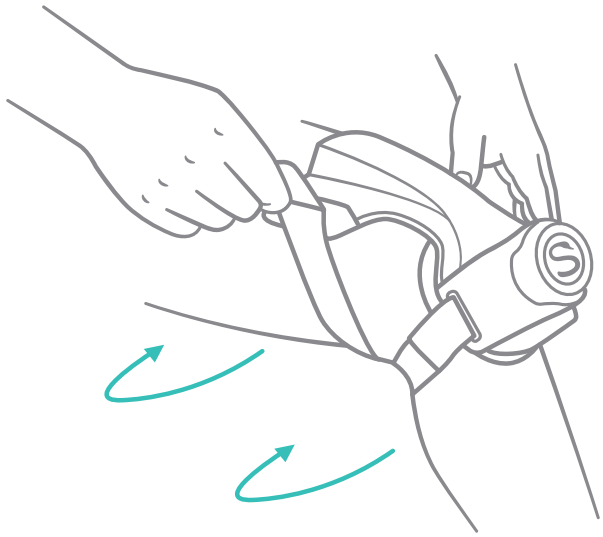

❷ Use the Velcro on the strap to adjust to the appropriate tightness. Be careful not to make it too loose, otherwise it will easily move during the massage.

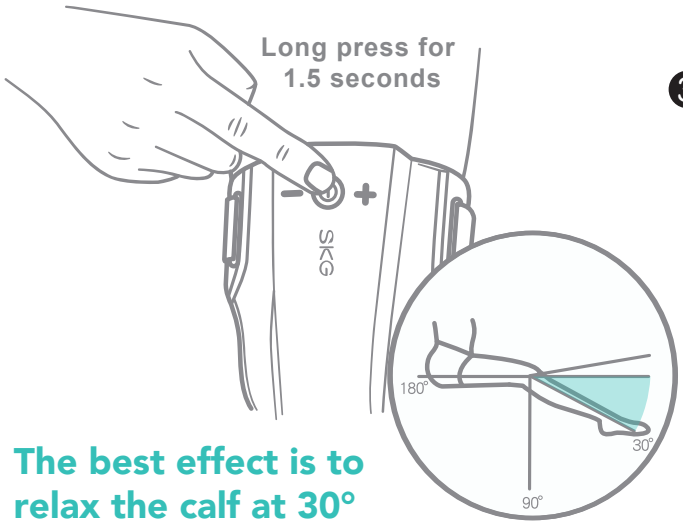

The best effect is to relax the calf at 30° to the ground.

❸ Long press the on/off button to start, short press the on/off button to switch modes, short press the " + − " button to switch the heat compress position.

Note: When using the product, please avoid placing your calf at a 90-degree angle to the ground, which will affect the knee relaxation effect.

Charging/Power Instructions

EN

Light color	Light status	Describe
Blue light	Always on	Battery level>25%
Orange light	Always on	Battery level < 25%
Orange light	Flash	Battery charging
Blue light	Flash	Battery full

Basic Product Parameters

EN

Product Name	Knee Massager	**Model**	WS500
Rated Input Power	14W	**Rated Input Voltage**	5V ⎓
Battery Capacity	2500mAh/18.5Wh		

1. Each use time is 20 minutes. Please pay attention to your knee condition and adjust the use time and frequency appropriately.
   Note: It is recommended to use it twice a day to avoid excessive use of the massage function.
2. When using this product for the first time, it is recommended to choose the gentle mode, and then switch to different modes according to your knee condition. Note: When using a high-intensity mode, if you feel itchy or uncomfortable, please switch to a low-intensity gentle or soothing mode. People over 70 years old should use with caution: Vitality or Strong mode.
3. When using this product, your knees may turn red for a short time. This does not indicate a problem. If this condition persists, consult a doctor.
   Note: When using a higher temperature setting, please pay attention to your knees to avoid low temperature burns.
4. If you feel pain in your legs or around your knees, stop using this product immediately.

Product Disposal Precautions

EN

Please support the recycling of rechargeable batteries (lithium-ion batteries)

⚠ **Danger**	This product's battery is a dedicated rechargeable battery that should not be used in other products. Do not charge the battery once it has been removed. • Do not throw into the fire or expose to excessive heat. • Do not puncture with nails, subject to heavy impact, or disassemble • Do not directly connect the battery's positive and negative terminals with metal • Do not store it with necklaces, hairpins, etc. • Do not charge, use, or store in high-temperature locations such as near a stove or under direct sunlight • All of the abovementioned scenarios can result in overheating, fire, or bursting.
⚠ **Warning**	Place the removed rechargeable battery out of the reach of infants to prevent accidental ingestion • If swallowed, seek medical attention immediately. • If battery leakage occurs, do not touch the liquid with bare hands. • Follow the safety instructions below: • There is the risk of blindness if battery fluid contacts the eyes. Do not rub the eye with your hands. Rinse with clean water immediately and seek medical attention. If battery liquid gets on the body or clothing, it may cause skin inflammation or injury. Rinse with clean water, and if discomfort persists, seek medical attention mediately. • Disassembly is only permitted when the product is being discarded. Failure to comply may result in fire, electric shock, injury, or other accidents. Please contact the retailer where you purchased the product for repairs (except battery replacement).

The lithium-ion battery used in this product is a valuable recyclable resource. Please remove the lithium-ion battery prior to disposal and hand over it to a professional organization capable of recycling and processing rechargeable batteries.

- The battery must be removed from the device before discarding the appliance.
- The device must be turned off before removing the battery.
- The battery should be disposed of safely.

Removal Steps:

1. Pry open the main unit's inner and outer shells using professional tools.
2. Unscrew the fixed screws of the internal bracket using a screwdriver.
3. Unscrew the screws at the circuit board.
4. Cut the battery leads using scissors.
5. Remove the battery.

Precautions

EN

⚠ Danger

- Please do not use with the following medical electronic devices:
  - Implantable medical electronic devices such as cardiac pacemakers.
  - Artificial heart and lung and other life-sustaining medical electronic devices.
  - Electrocardiograph and other medical electronic devices.
- Do not use this product while driving, rock climbing or other dangerous activities.
- There is a risk of low-temperature burns if this product is used for a long time. Do not use it when you are asleep or unconscious.

⚠ Warn

- This product is a personal care massage product and cannot replace medicines and medical devices.
- Pregnant women and postpartum women should use it with caution. Please use it under the permission and guidance of a doctor.
- For sensitive skin, please use it under the permission and guidance of a doctor.
- If you feel uncomfortable during use, please stop using it immediately.
- This product contains a lithium battery. Please do not disassemble, modify, immerse the product in water or throw it into fire.

⊘ Do not use or store this product in the following places

- Near fireworks.
- Strong electromagnetic places.
- High temperature and high humidity places.
- Places susceptible to vibration and shock.
- Places with high dust content.
- Gas stations, high dust workshops, gas stations and other flammable and explosive places.

⊘ The following groups are prohibited from using

- Patients with malignant tumors
- Patients with acute suppurative inflammation
- Patients with metal implants
- Patients with coagulation disorders
- Patients with spastic paralysis
- Patients with severe cognitive impairment
- Patients with limb bone and joint contracture deformities
- Pregnant women
- Patients with spasm after cerebrovascular accident

- Patients with abnormal neuroirritability
- Patients with bleeding tendency
- Infants, children, and those who have completely or partially lost consciousness Pacemaker users

⚠ The following people should consult a doctor before using

- People with cerebrovascular disease or blood circulation disorder, skin inflammation, swelling, suppuration, and other skin diseases.
- Patients who are receiving medical treatment and feel abnormal.
- Patients with sensory impairment due to high peripheral circulation disorder caused by diabetes, etc.
- Patients with infectious diseases.
- Patients with abnormal blood pressure.
- Patients with sensory impairment.
- Patients with body temperature exceeding 38 degrees (fever period).
- Patients with heart and cranial nerve abnormalities.
- Patients who cannot express their wishes freely.

⚠ Notice

- Please read the instructions before using this product.
- If you feel unwell due to abnormality of this product, please stop using it immediately, consult a doctor and follow the doctor's advice.
- If abnormal conditions occur that it cannot operate, please remove it immediately and contact customer service for after-sales consultation.
- Do not plug or unplug the charging cable with wet hands, otherwise it may cause electric shock or accidents.
- When unplugging the charging cable from the product body, do not pull the wire, but hold the wire and pull it out with your fingers, otherwise it may cause electric shock or damage the product.
- When using it for the first time, because the battery power of the product is low after being shelved for a long time, please charge it according to the instructions to ensure that it can work normally.
- When the product works for a long time, the surface will heat up, which is a normal phenomenon.
- Do not massage continuously for a long time. If you feel uncomfortable, please take a break before using it.
- When discarding this product, please handle it in accordance with the relevant environmental protection regulations of the city, otherwise it may cause environmental pollution.
- This product is not a medical device product and does not have the function of diagnosing and treating diseases.
- During the massage process, if you want to move the massager to another person, Please be sure to turn off the device before operating.
- The device has a hot surface, so people who are not sensitive to heat must be careful when using it.

Note: This equipment has been tested and found to comply with the limits for a Class B digital device, pursuant to part 15 of the FCC Rules. These limits are designed to provide reasonable protection against harmful interference in a residential installation. This equipment generates, uses and can radiate radio frequency energy and, if not installed and used in accordance with the instructions, may cause harmful interference to radio communications. However, there is no guarantee that interference will not occur in a particular installation. If this equipment does cause harmful interference to radio or television reception, which can be determined by turning the equipment off and on, the user is encouraged to try to correct the interference by one or more of the following measures:

* Reorient or relocate the receiving antenna.
* Increase the separation between the equipment and receiver.
* Connect the equipment into an outlet on a circuit different from that to which the receiver is connected.
* Consult the dealer or an experienced radio/TV technician for help.

This device in compliance with the essential requirements and other relevant provisions of Directive (EU)2023/988.

CAUTION : RISK OF EXPLOSION IF BATTERY IS REPLACED BY AN INCORRECT TYPE. DISPOSE OF USED BATTERIES ACCORDING TO THE INSTRUCTIONS.

EU Compliance Statement:

SKG Health technology Co.,Ltd. Here by declares that this device is in compliance with the essential requirements and other relevant provisions of the Directive (EU)2023/988. A copy of the EU Declaration of Conformity is available online at https://www.skg.com/pages/skg-declaration-of-conformity.

Old electrical appliances must not be disposed of together with the residual waste, but have to be disposed of separately. The disposal at the communal collecting point via private persons is for free. The owner of old appliances is responsible to bring the appliances to these collecting points or to similar collection points. With this little personal effort, you contribute to recycle valuable raw materials and the treatment of toxic substances.



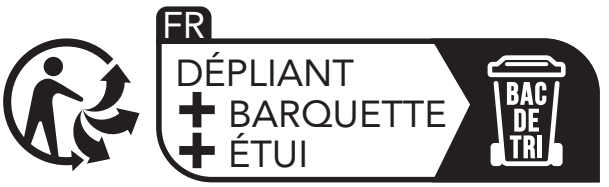

EU REP

SUCCESS COURIER SL
CALLE RIO TORMES NUM.1, PLANTA 1, DERECHA,
OFICINA 3, Fuenlabrada, Madrid, 28947 Spain
successservice2@hotmail.com

OST_EU_20230214000009

SKG Health Technologies Co., Ltd.

Address: 23A Floor, Building 3, Zhongke R&D Park, No. 009,
Gaoxin South 1st Road, High-tech Zone Community, Yuehai Street,
Nanshan District, Shenzhen, Guangdong, China.

Website : https://global.skg.com/

Made in China