Electrolux

electrolux.com/register

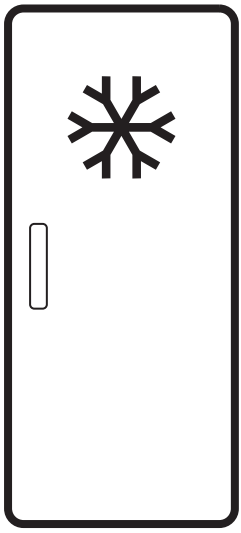

EUA7NE18S

INSTALLATION

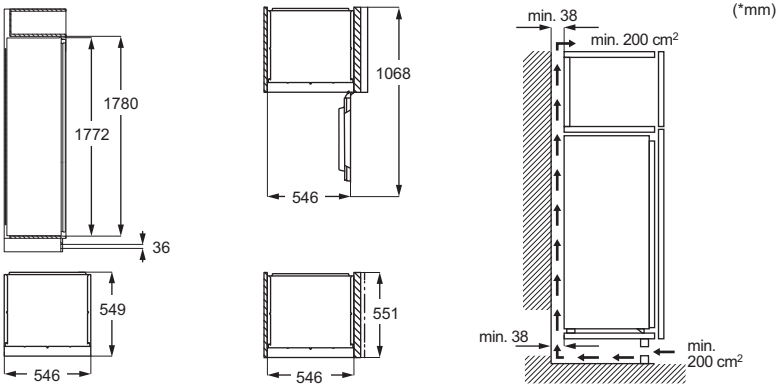

NOISES

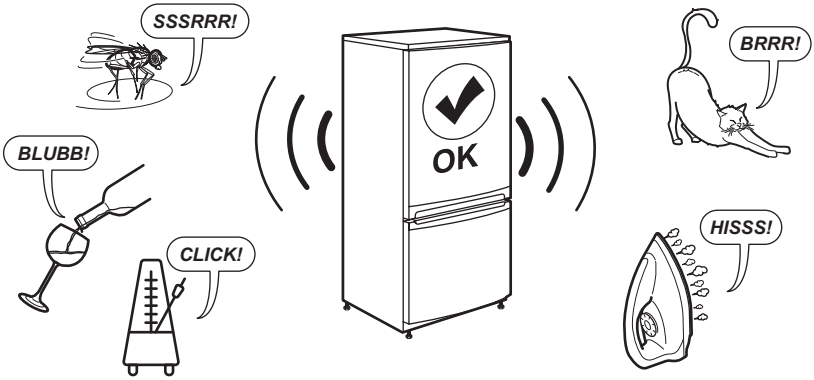

1. SAFETY INFORMATION..... **3**
2. SAFETY INSTRUCTIONS..... **4**
3. CONTROL PANEL..... **6**
4. DAILY USE..... **8**
5. HINTS AND TIPS..... **8**
6. CARE AND CLEANING..... **9**
7. TROUBLESHOOTING..... **10**
8. TECHNICAL DATA..... **12**
9. INFORMATION FOR TEST INSTITUTES **12**
10. ENVIRONMENTAL CONCERNS..... **12**

1. ⚠ SAFETY INFORMATION

Before the installation and use of the appliance read the supplied instructions carefully. The manufacturer is not responsible for any injuries or damage that result from incorrect installation or usage. Always keep the instructions in a safe and accessible location for future reference.

1.1 Children and vulnerable people safety

- This appliance can be used by children aged from 8 years and above and persons with reduced physical, sensory or mental capabilities or lack of experience and knowledge if they have been given supervision or instruction concerning the use of the appliance in a safe way and understand the hazards involved. Children aged from 3 to 8 years and persons with very extensive and complex disabilities are allowed to load and unload the appliance provided that they have been properly instructed. Children of less than 3 years of age should be kept away from the appliance unless continuously supervised.
- Children should be supervised to ensure that they do not play with the appliance.
- Children shall not carry out cleaning and user maintenance of the appliance without supervision.
- Keep all packaging away from children and dispose of it appropriately.

1.2 General Safety

- This appliance is for storing food and beverages only.
- This appliance is designed for single household domestic use in an indoor environment.
- This appliance may be used in, offices, hotel guest rooms, bed & breakfast guest rooms, farm guest houses and other similar accommodation where such use does not exceed (average) domestic usage levels.
- To avoid contamination of food respect the following instructions:
  - do not open the door for long periods;

– clean regularly surfaces that can come in contact with food and accessible drainage systems;
- WARNING: Keep ventilation openings, in the appliance enclosure or in the built-in structure, clear of obstruction.
- WARNING: Do not use mechanical devices or other means to accelerate the defrosting process, other than those recommended by the manufacturer.
- WARNING: Do not damage the refrigerant circuit.
- WARNING: Do not use electrical appliances inside the food storage compartments of the appliance, unless they are of the type recommended by the manufacturer.
- Do not use water spray and steam to clean the appliance.
- Clean the appliance with a moist soft cloth. Only use neutral detergents. Do not use abrasive products, abrasive cleaning pads, solvents or metal objects.
- When the appliance is empty for long period, switch it off, defrost, clean, dry and leave the door open to prevent mould from developing within the appliance.
- Do not store explosive substances such as aerosol cans with a flammable propellant in this appliance.
- If the supply cord is damaged, it must be replaced by the manufacturer, its Authorised Service Centre or similarly qualified persons in order to avoid a hazard.

2. SAFETY INSTRUCTIONS

2.1 Installation

⚠ **WARNING!**
Only a qualified person must install this appliance.

- Remove all the packaging.
- Do not install or use a damaged appliance.
- Do not use the appliance before installing it in the built-in structure due to safety manner.
- Follow the separate instructions for the installation and door reversing supplied with the appliance or available on our website.
- Always take care when moving the appliance as it is heavy. Always use safety gloves and enclosed footwear.
- Make sure the air can circulate around the appliance.
- At first installation or after reversing the door, wait at least 4 hours before connecting the appliance to the power

supply. This is to allow the oil to flow back in the compressor.
- Before carrying out any operations on the appliance (e.g. reversing the door), remove the plug from the power socket.
- Do not install the appliance close to radiators or cookers, ovens, or hobs, unless otherwise specified in the installation instructions.
- Do not expose the appliance to the rain.
- Do not install the appliance where there is direct sunlight.
- Do not install this appliance in areas that are too humid or too cold.
- When you move the appliance, lift it by the front edge to avoid scratching the floor.
- Protect the floor from scratches when reversing the appliance door.
- The appliance contains a bag of desiccant. This is not a toy. This is not food. Please dispose of it immediately.

2.2 Electrical connection

⚠ WARNING!
Risk of fire and electric shock.

⚠ WARNING!
When positioning the appliance, ensure the supply cord is not trapped or damaged.

⚠ WARNING!
Do not use multi-plug adapters and extension cables.

⚠ CAUTION!
Any electrical work required to install this appliance should be carried out by a qualified electrician.

- Make sure that the parameters on the rating plate are compatible with the electrical ratings of the mains.
- The appliance must be earthed.
- Always use a correctly installed shockproof socket.
- If the domestic power supply socket is not earthed, connect the appliance to a separate earth in compliance with current regulations, consulting a qualified electrician.
- Make sure not to cause damage to the electrical components (e.g. mains plug, mains cable, compressor). Contact the Authorised Service Centre or an electrician to change the electrical components.
- The mains cable must stay below the level of the mains plug.
- Connect the mains plug to the mains socket only at the end of the installation. Make sure that there is access to the mains plug after the installation.
- Do not disconnect the appliance by pulling on the mains cable. Always pull on the mains plug.
- This appliance is fitted with a 13 A mains plug. If it is necessary to change the mains plug fuse, use only a 13 A ASTA (BS 1362) fuse (UK and Ireland only).

2.3 Use

⚠ WARNING!
Risk of injury, burns, electric shock or fire.


The appliance contains flammable gas, isobutane (R600a), a natural gas with a high level of environmental compatibility. Be careful not to cause damage to the refrigerant circuit containing isobutane.

- Do not change the specification of the appliance.
- Any use of the built-in product as free-standing is strictly prohibited.
- This appliance is intended to be used at ambient temperature ranging from 10°C to 38°C. The specified temperature range guarantees the correct operations of the appliance.
- Do not put electrical appliances (e.g. ice cream makers) in the appliance unless they are stated applicable by the manufacturer.
- If damage occurs to the refrigerant circuit, make sure that there are no flames and sources of ignition in the room. Ventilate the room.
- Do not let hot items to touch the plastic parts of the appliance.
- Do not put soft drinks in the freezer compartment. This will create pressure on the drink container.
- Do not store flammable gas and liquid in the appliance.
- Do not put flammable products or items that are wet with flammable products in, near or on the appliance.
- Do not touch the compressor or the condenser. They are hot.

- Do not remove or touch items from the freezer compartment if your hands are wet or damp.
- Do not freeze again food that has been thawed.
- Follow the storage instructions on the packaging of frozen food.
- Wrap the food in any food contact material before putting it in the freezer compartment.
- Do not allow food to come in contact with the inner walls of the appliance compartments.

2.4 Care and cleaning

⚠ WARNING!
Risk of injury or damage to the appliance.

- Before maintenance, deactivate the appliance and disconnect the mains plug from the mains socket.
- This appliance contains hydrocarbons in the cooling unit. Only a qualified person must do the maintenance and the recharging of the unit.
- Check the product regularly for signs of deterioration that may make it unsuitable for food contact, such as cracks, blisters, delamination, shrinkage, stickiness, corrosion, or other visible changes in texture or appearance. Follow cleaning and care instructions to prevent deterioration.

2.5 Service

- To repair the appliance contact the Authorised Service Centre. Use only original spare parts.
- Please note that self-repair or non-professional repair can have safety consequences and might void the guarantee.
- The following spare parts are available for at least 7 years after the model has been discontinued: thermostats, temperature sensors, printed circuit boards, light sources, door handles, door hinges, trays and baskets. Door gaskets are available for at least 10 years after the model has been discontinued. The duration may be longer in your country. For further information, please visit our website.
- Please note that some of these spare parts are only available to professional repairers, and that not all spare parts are relevant for all models.

2.6 Disposal

⚠ WARNING!
Risk of injury or suffocation.

- Disconnect the appliance from the mains supply.
- Cut off the mains cable and discard it.
- Remove the door to prevent children and pets to be closed inside of the appliance.
- The refrigerant circuit and the insulation materials of this appliance are ozone-friendly.
- The insulation foam contains flammable gas. Contact your municipal authority for information on how to discard the appliance correctly.
- Do not cause damage to the part of the cooling unit that is near the heat exchanger.

3. CONTROL PANEL

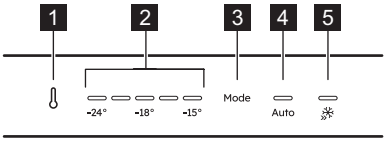

1 Temperature button
2 Temperature indicators
3 Mode button / Appliance ON/OFF button
4 AI CoolAssist indicator
5 Extra Freeze indicator

3.1 Switching on/off

Switching on

1. Insert the plug into the power socket.
2. Press and hold the appliance ON/OFF button.

Temperature indicators show the set default temperature.

Switching off

1. Press and hold the appliance ON/OFF button. Temperature indicators switch off.

2. Disconnect the mains plug from the power socket.

3.2 Temperature regulation

ⓘ It is not possible to set the temperature when the Extra Freeze function is on.

ⓘ It is not possible to set the temperature when the AI CoolAssist function is on.

Set the temperature of the appliance by tapping the temperature button.

Temperature indicators show the set temperature level.

The temperature range may vary between -15°C and -24°C (recommended -18°C).

ⓘ The set temperature will be reached within 24 h.
After a power failure, the appliance restores the set temperatures.

3.3 AI CoolAssist

AI CoolAssist is a machine learning-powered feature that adjusts the appliance settings based on individual usage patterns including the frequency of door openings and other user interactions with the appliance. Use AI CoolAssist to automatically enable the following smart modes:

- temperature management: automatically regulates the temperature in the fridge and freezer compartments to ensure the optimal food preservation.
- Auto Vacation Mode: reduces the energy consumption when the appliance is not in use for three or more consecutive days.
- Auto Rapid Freeze: automatically detects new fresh food in the freezer compartment and activates Extra Freeze.

To activate/deactivate the function press Mode button.

When the function is on, AUTO indicator turns on while other indicators turn off.

To come back to the manual setting press Mode button until temperature indicator turns on.

ⓘ Temperature regulation button is disabled when AI CoolAssist is on. Turn it off to adjust the temperature.

ⓘ Activating AI CoolAssist, while Extra Cool and/or Extra Freeze are on, deactivates Extra Cool and Extra Freeze. Activating Extra Cool and/or Extra Freeze, while AI CoolAssist is on, deactivates AI CoolAssist.

ⓘ Place the new fresh food in the upper drawer to facilitate Auto Rapid Freeze food detection.

ⓘ Auto Rapid Freeze can temporarily increase noise level. The mode stops after a max. of 6 h.

3.4 Extra Freeze function

The Extra Freeze function is used to pre-freeze and fast freeze in sequence in the freezer compartment. This function accelerates the freezing of fresh food and protects foodstuffs already stored from warming.

ⓘ To freeze fresh food activate the Extra Freeze function at least 24 h before placing the food.

To activate/ deactivate the Extra Freeze function press Mode button until the Extra Freeze indicator turn on/ off.

ⓘ This function stops after a maximum 52 h.

3.5 High temperature alarm

When the temperature in the freezer compartment increases, the first, third and fifth freezer temperature indicators flash and the sound is on.

To deactivate the alarm for 1 h, press any button. The sound switches off. The first, third and fifth freezer temperature indicators light steadily for 5 sec before indicating the freezer temperature again.

After 1 h the alarm restarts until normal conditions are restored.

If you do not press any button, the sound switches off after 1 h.

3.6 Door open alarm

If the freezer door is left open for approx. 80 sec, freezer temperature indicators flash and the sound is on.

Press any button to switch off the sound. The sound switches off after 1 h.

The alarm deactivates after closing the door.

4. DAILY USE

4.1 Removing drawers

To remove a drawer from a compartment:

1. Pull the drawer out until it stops.
2. Once you reach the end of the runners, lift slightly the front of the drawer and remove it from the appliance.

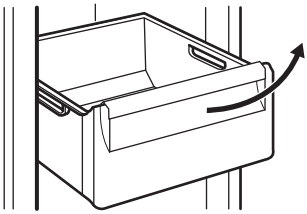

ⓘ To put the drawer into a compartment, follow the above steps in reverse order.

ⓘ In some models, to remove the drawer, it is necessary to remove the bottle bin first.

4.2 Freezing fresh food

Use the freezer compartment for freezing fresh food and storing frozen and deep-frozen food for a long time.

Activate the Extra Freeze function at least 24 h before placing the food to be frozen in the freezer compartment.

Store the fresh food evenly distributed in the first and second compartment or drawer from the top.

Do not exceed the max. amount of food that can be frozen without adding other fresh food within 24 h (refer to the rating plate).

When the freezing process is complete, the appliance automatically returns to the previous temperature setting (see "Extra Freeze function").

For more information refer to "Hints for freezing".

4.3 Storage of frozen food

When activating the appliance for the first time or after a period out of use, activate the Extra Freeze function at least 3 h before putting the products in the freezing compartment.

To store large quantities of food, remove the drawers and place the food directly on the shelves, at least 15 mm away from the door.

⚠ **CAUTION!**

If the power has been off for longer than the value shown on rating plate under "rising time", the defrosted food must be consumed immediately. Refer to "High temperature alarm".

5. HINTS AND TIPS

5.1 Hints for energy saving

- The original configuration ensures the most efficient use of energy.
- Do not open the door frequently or leave it open longer than necessary.
- The colder the temperature setting, the higher the energy consumption.
- Do not cover the ventilation grilles or holes.
- Ensure that food products inside the appliance allow air circulation through holes in the rear interior of the appliance.

5.2 Hints for freezing

- Do not freeze bottles or cans with liquids, in particular drinks containing carbon dioxide. They may explode during freezing.
- Do not put hot food in the freezer compartment.
- Do not place fresh unfrozen food directly next to already frozen food.
- Do not eat ice cubes, water ices or ice lollies immediately after taking them out of the freezer to avoid frostbites.
- Do not re-freeze defrosted food.

5.3 Hints for storage of frozen food

- Freezer compartment is marked with ✳✳✳.
- Good temperature setting that ensures preservation of frozen food products is a temperature less than or equal to -18°C.

- Higher temperature setting inside the appliance may lead to shorter shelf life.
- The whole freezer compartment is suitable for storage of frozen food products.
- Leave enough space around the food to allow air to circulate freely.

5.4 Shelf life

Type of food	Shelf life (months)
Bread	3
Fruits (except citrus)	6 - 12
Vegetables	8 - 10
Leftovers without meat	1 - 2
Dairy food:	
Butter	6 - 9
Soft cheese (e.g. mozzarella)	3 - 4
Hard cheese (e.g. parmesan, cheddar)	6
Seafood:	
Fatty fish (e.g. salmon, mackerel)	2 - 3
Lean fish (e.g. cod, flounder)	4 - 6
Shrimps	12
Shucked clams and mussels	3 - 4
Cooked fish	1 - 2
Meat:	
Poultry	9 - 12
Beef	6 - 12
Pork	4 - 6
Lamb	6 - 9
Sausage	1 - 2
Ham	1 - 2
Leftovers with meat	2 - 3

6. CARE AND CLEANING

⚠ **WARNING!**
Refer to Safety chapters.

6.1 Cleaning the interior

Before first use clean the interior and all accessories with lukewarm water and neutral soap, then dry.

⚠ **CAUTION!**
The accessories and parts of the appliance are not suitable for washing in a dishwasher.

⚠ **CAUTION!**
Clean the control panel with a moist cloth. Do not use any detergents. Wipe the control panel dry with a soft cloth.

6.2 Periodic cleaning

Clean the equipment regularly:

- Clean the inside and accessories with lukewarm water and neutral soap. Rinse and wipe them dry.
- Wipe down the door seals regularly.

6.3 Defrosting of the freezer

The freezer compartment is frost free. There is no build up frost on the internal walls nor on the foods, when the appliance is in operation.

6.4 Period of non-operation

When the appliance is not in use for long period, take the following precautions:

1. Disconnect the appliance from electricity supply.
2. Remove all food.
3. Clean the appliance and all accessories.
4. Leave the door open to prevent unpleasant smells.

7. TROUBLESHOOTING

⚠ **WARNING!**
Refer to Safety chapters.

7.1 What to do if...

Problem	Possible cause	Solution
The appliance does not operate.	The appliance is switched off.	Switch on the appliance.
	The mains plug is not connected to the mains socket correctly.	Connect the mains plug to the mains socket correctly.
	There is no voltage in the mains socket.	Connect a different electrical appliance to the mains socket. Contact a qualified electrician.
The appliance is noisy.	The appliance is not supported properly.	Check if the appliance stands stable.
Acoustic or visual alarm is on.	The cabinet has been recently switched on.	Refer to "High temperature alarm" or "Door open alarm".
	The temperature in the appliance is too high.	Refer to "High temperature alarm" or "Door open alarm".
	The door is left open.	Close the door.
The compressor operates continually.	Temperature is set incorrectly.	Refer to "Control panel" chapter.
	Too much food is put in at the same time.	Wait a few hours and then check the temperature again.
	The room temperature is too high.	Refer to "Installation" chapter.
	Food placed in the appliance is too warm.	Allow food to cool to room temperature before storing.
	The door is not closed correctly.	Refer to "Closing the door" section.
	The Extra Freeze function is switched on.	Refer to "Extra Freeze function" section.
The compressor does not start immediately after pressing the "Extra Freeze", or after changing the temperature.	The compressor starts after a period of time.	This is normal, no error has occurred.
Door is misaligned or interferes with ventilation grill.	The appliance is not levelled.	Refer to installation instructions.
Door does not open easily.	You attempted to re-open the door immediately after closing.	Wait a few seconds between closing and re-opening of the door.
There is too much frost and ice.	The door is not closed correctly.	Refer to "Closing the door" section.

Problem	Possible cause	Solution
	The gasket is deformed or dirty.	Refer to "Closing the door" section.
	Food is not wrapped properly.	Wrap the food properly.
	Temperature is set incorrectly.	Refer to "Control panel" chapter.
	Appliance is fully loaded and is set to the lowest temperature.	Set a higher temperature. Refer to "Control panel" chapter.
	Temperature set in the appliance is too low and the ambient temperature is too high.	Set a higher temperature. Refer to "Control panel" chapter.
Water flows on the floor.	The melting water outlet is not connected to the evaporative tray above the compressor.	Attach the melting water outlet to the evaporative tray.
Temperature cannot be set.	The Extra Freeze function is switched on.	Switch off Extra Freeze function manually, or wait until it deactivates automatically. Refer to "Extra Freeze function" section.
The temperature in the appliance is too low/too high.	The temperature is not set correctly.	Set a higher/lower temperature.
	The door is not closed correctly.	Refer to the "Closing the door" section.
	The food is too hot.	Let the food cool down before storage.
	Too much food is stored at the same time.	Store less food at the same time.
	The door has been opened often.	Open the door only if necessary.
	The Extra Freeze function is switched on.	Refer to the "Extra Freeze function" section.
	There is no cold air circulation in the appliance.	Ensure cold air circulation in the appliance. Refer to the "Hints and tips" chapter.
Fifth temperature indicator blinks.	Communication problem.	Contact the Authorised Service Centre. The cooling system will continue to keep food cold, but temperature adjustment will not be possible.
First or second temperature indicator blinks.	Temperature sensor problem.	Contact the Authorised Service Centre. The cooling system will continue to keep food cold, but temperature adjustment will not be possible.

ⓘ If the problem persists, contact the Authorised Service Centre.

7.2 Closing the door

1. Clean the door gaskets.
2. To adjust the door, refer to installation instructions.
3. To replace the defective door gaskets, contact the Authorized Service Centre.

8. TECHNICAL DATA

The technical information is on the energy label and on the appliance rating plate, which may be located on or inside the appliance.

The QR code on the energy label supplied with the appliance provides a web link to the information related to the performance of the appliance in the EU EPREL database. Keep the energy label for reference together with the user manual and all other documents provided with this appliance. It is also possible to find the same information in EPREL using the link *https://eprel.ec.europa.eu* and the model name and product number that you find on the rating plate of the appliance. See the link *www.theenergylabel.eu* for detailed information about the energy label.

9. INFORMATION FOR TEST INSTITUTES

Installation and preparation of the appliance for Ecodesign verification must comply with EN 62552 (EU, Switzerland and UK). Refer to Installation for ventilation requirements, recess dimensions, and minimum rear clearances. Contact the Authorised Service Centre for any further information.

10. ENVIRONMENTAL CONCERNS

Recycle materials with the symbol ♺. Put the packaging in relevant containers to recycle it. Help protect the environment and human health by recycling waste of electrical and electronic appliances. Do not dispose of appliances marked with the symbol ⍁ with the household waste. Return the product to your local recycling facility or contact your municipal office.



CE