GIGABYTE™

GIGABYTE AI TOP ATOM Small Scale Server

User's Manual

Rev. 1006



Copyright
© 2026 GIGA-BYTE TECHNOLOGY CO., LTD. All rights reserved.
The trademarks mentioned in this manual are legally registered to their respective owners.

Disclaimer
Information in this manual is protected by copyright laws and is the property of GIGABYTE.
Changes to the specifications and features in this manual may be made by GIGABYTE without prior notice. No part of this manual may be reproduced, copied, translated, transmitted, or published in any form or by any means without GIGABYTE's prior written permission.

Documentation Classifications
In order to assist in the use of this product, GIGABYTE provides the following types of documentations:

- For quick set-up of the product, read the Quick Startup Guide included with the product.
- For detailed product information, carefully read the User's Manual.

For product-related information, check on our website at: https://www.gigabyte.com

Table of Contents

Box Contents 4

Chapter 1 Hardware Installation 5

1-1 Safety Information 5

1-2 Hardware Information 6

Small-Scale Server Overview 6

Front View 6

Back View 7

1-3 Getting Started 8

Connecting Peripheral Devices 8

Turning On 9

Device Setup UI 10

1-4 System Stack 11

Update the NVIDIA DGX™ Operating System 13

Reinstall the NVIDIA DGX™ Operating System 13

Create a Bootable USB Flash Drive 14

Boot the NVIDIA DGX™ Operating System ISO Image 14

Obtain and Activate AI Models 15

Firmware Update 15

PRODUCT WARRANTY 16

Regulatory Notices 21

Contact Us 27

Box Contents

- ☑ AI TOP ATOM-Small Scale Server (Note)
- ☑ Quick Start Guide
- ☑ Adapter
- ☑ Power Cord

* The box contents above are for reference only and the actual items shall depend on the product package you obtain. The box contents are subject to change without notice.

(Note) Model name of the AI TOP ATOM-Small Scale Server:

* ATAGB10-9000 * ATAGB10-9001 * ATAGB10-9002

Chapter 1 Hardware Installation

1-1 Safety Information

- Keep the plastic packaging bag for the product in a place that cannot be reached by children.
- Before connecting to the power outlet, make sure that the voltage rating of the power cable is compatible with the power specification in the country where you are located.
- The power cord plug must be connected to a properly wired and grounded power outlet.
- Be sure that the power outlet you plug the power cord into is easily accessible and located as close to the equipment operator as possible. When you need to disconnect power to the equipment, be sure to unplug the power cord from the electrical outlet.
- Do not touch the plug with wet hands, otherwise easily cause electric shock.
- Protect the power cord from being tread upon or pinched, particularly at the plug.
- To avoid damage of internal component, do not place the product on a vibrating surface.
- Operating temperature: 5~35°C.
- Do not place the product near any heat sources such as electric radiators, heat registers, stoves or other devices (including amplifiers) that produce heat.
- The holes or openings on this product are for ventilation to ensure reliable operation of the product and to protect it from overheating. Do not cover or block the ventilation holes with any objects.
- Never push objects of any kind into this product through cabinet slots as they may touch dangerous voltage points or short-out parts that could result in a fire or electric shock. Never spill liquid of any kind onto or into the product.
- Do not use this product near water, drinks, or all types of liquids. Do not expose this apparatus to rain, liquid or moisture. Failure to do so may result in electric shock or damage. This product is not water proof or oil-proof.
- Clean the equipment with a soft, dry cloth.
- The manufacturer specifies that the thumbscrews normally should be tightened with a screwdriver, use of thumbscrews is not considered to compromise the basic principles of safety associated with the Safety Standard.
- Many injuries, particularly to children, can be avoided by taking simple precautions such as:
  - ALWAYS educate children about the dangers of climbing on furniture to reach the product or its controls.
  - ALWAYS route cords and cables connected to your product so they cannot be tripped over, pulled or grabbed.
  - NEVER place a product in an unstable location.
  - If the existing product is to be retained and reinstalled, the same safety precautions as stated above must be observed.
  - To prevent personal injury or product damage caused by the unit tipping over due to earthquakes or other impacts, be sure to install the product in a stable location and take measures to prevent it from falling.

1-2 Hardware Information

Small-Scale Server Overview

Front View

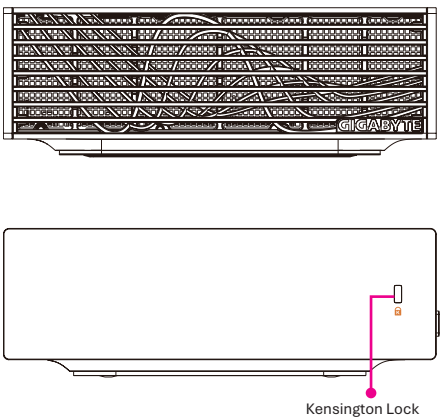

Back View

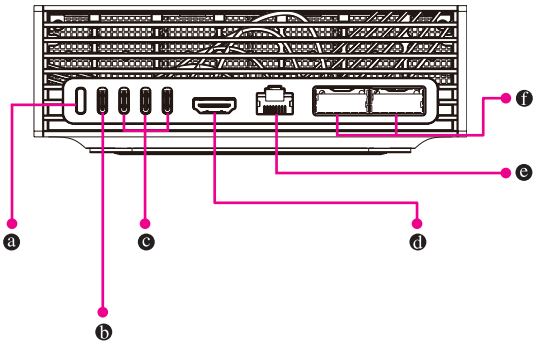

a Power Button
The power button allows users to turn on/off the computer.

b DC-IN(USB-C)

c USB Type-C® Port (USB 3.2 Gen 2x2 Support)
The reversible USB port supports the USB 3.2 Gen 2x2 specification and is compatible to the USB 3.2 Gen 2, USB 3.2 Gen 1, and USB 2.0 specification. Use this port for USB devices.

d HDMI Port-2.1a
This port is compatible with HDCP 2.3 specifications. You can connect a display supporting the HDMI connector to this port. The actual supported resolution will vary depending on the display you are using.

After installing the HDMI device, make sure to set the default sound playback device to HDMI. (The item name may differ depending on your operating system.)

e RJ45 10G Ethernet Port
The LAN port provides an Internet connection with data rates of up to 10 Gbps.

f NVIDIA ConnectX-7
NVIDIA ConnectX™ networking to link two systems to work with models up to 405 billion parameters.

- When removing cables connected to the sockets, please first remove the connector on the device side, and then remove the connector on the Small-Scale Server side.
- When removing the cable, pull it straight out from the connector. Do not rock it side to side to prevent an electrical short inside the cable connector.

1-3 Getting Started

- This product is designed for use only when placed flat.
- Peripheral devices are not included.

Connecting Peripheral Devices

Connect your peripheral devices such as keyboard, mouse, monitor, and etc. to the desktop computer.

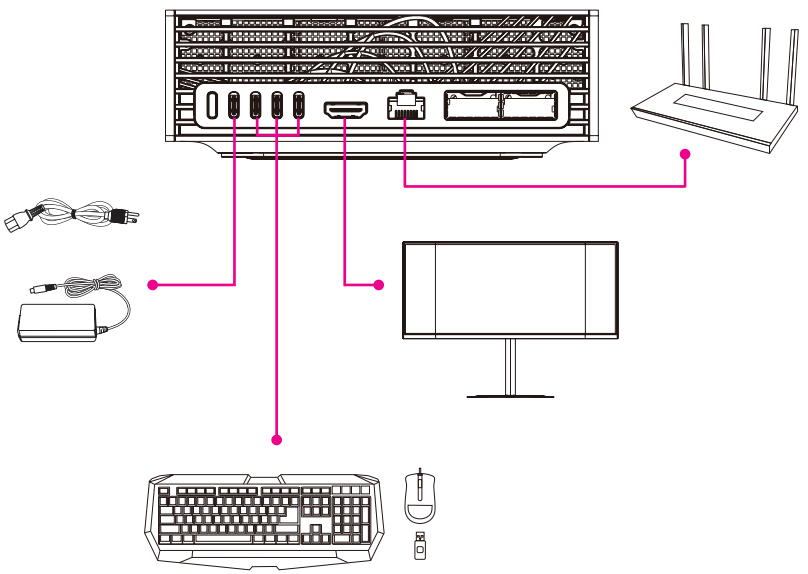

Turning On

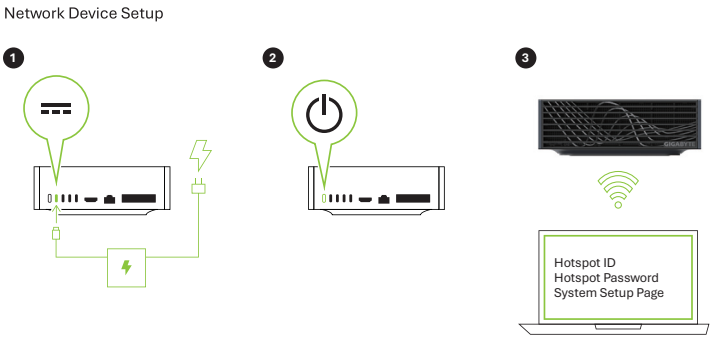

❶ **Connecting the Power Cord**
Connect the included power cord to the Small-Scale Server and a power outlet.

❷ **Turning On**
Press the power button to turn on the Small-Scale Server.

❸ **Power On Configuration**
After the customer unboxes the device and connects it to power, they can configure the device in one of the two configurations described on the QSG:

- Desktop: using attached Monitor, Mouse, Keyboard
  In this configuration a customer will connect a monitor via HDMI (recommended) or USB-C (for DP monitors) and use keyboard & mouse to use when interacting with the device.
  When the device is powered on, the OOBE launches in full-screen mode and displays UI elements waiting for a keyboard, then mouse if none are attached through USB. It will set the device's Bluetooth radio in pairing mode so a customer can connect BT peripherals. Once the device detects a mouse and keyboard are connected, the OOBE will proceed to show the system setup UI.
- Network Appliance: connected to customer's Wi-Fi or Ethernet LAN
  In this configuration, a customer will primarily interact with AI TOP ATOM via its Wi-Fi network connection. When the device is powered up for the first time, it will start a Wi-Fi access point with the SSID name that is included on package insert card. Using a laptop (preferred) or mobile device, the customer will join the Wi-Fi network broadcasted by the device and open the system setup page specified on the QSG. The system setup page will display the device setup UI in the customer's brower window on their laptop or mobile device. If a customer intends to use Ethernet to connect to the AI TOP ATOM will switch to using the connected Ethernet adapter in a later stage of the setup process.

Please refer to the device itself and the quick start guide included with the package for the hotspot ID and password.

Device Setup UI

The device setup UI guides the customer through a series of steps for configuring the device. These steps include:

- Region and Language selection
- Specifying time zone
- Accepting EULAs
- Privacy preferences
- Creating a local user account
- Installing critical system updates

If the customer is not connected via Ethernet, the device setup UI will guide the user through connecting their AI TOP ATOM to customer's Wi-Fi network for internet access prior to installing critical system updates. After initial update are installed, the system will restart.

1-4 System Stack

Up to two systems can be stacked via optional QSFP interconnect cables.

The image showing the second system and the connected QSFP cable is for illustrative purposes only and is not included in the package. Please refer to this section for detailed interconnection steps.

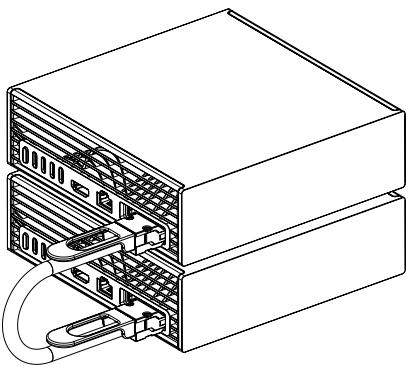

Please refer to the following instructions on how to use a simplified network configuration and QSFP/CX7 cables to connect two systems into a virtual compute cluster for high-performance interconnect.
This configuration aims to enable distributed workloads on Grace Blackwell GPUs by utilizing MPI (Message Passing Interface) for inter-process CPU communication and NCCL v2.28.3 (NVIDIA Collective Communications Library) for GPU-accelerated collective operations.

For more information, please refer to:
https://build.nvidia.com/spark/connect-two-sparks/overview

System Requirements
Before you begin, please ensure the following conditions are met:
- Both systems have Grace Blackwell GPUs, connected via QSFP/CX7 cables, and are running Ubuntu 24.04 (or the latest version) with NVIDIA drivers installed.



These ports only support Ethernet configurations, and the applicable cable specifications are as follows:
  - Amphenol: NJAAKK-N911 (QSFP to QSFP112, 32AWG, 400mm, LSZH), NJAAKK0006 is the 0.5m version of this cable.
  - Luxshare: LMTQF022-SD-R (QSFP112 400G DAC cable, 400mm, 30AWG).

- Systems have internet access for initial software setup.
- You have sudo/root access on both systems.

Configure Network
Configure network interfaces using “netplan” on two system nodes by following these steps. The following commands should be executed in a terminal session (local or remote).
Step 1: Download the netplan configuration file.
sudo wget -O /etc/netplan/40-cx7.yaml https://github.com/NVIDIA/dgx-sparkplaybooks/raw/main/nvidia/connect-two-sparks/assets/cx7-netplan.yaml

Step 2: Set the appropriate permissions for the configuration file.
sudo chmod 600 /etc/netplan/40-cx7.yaml

Step 3: Apply the netplan configuration.
sudo netplan apply

Update the NVIDIA DGX™ Operating System

If you want to update to the latest operating system or software suite, please refer to:
https://www.gigabyte.com/AI-TOP-PC/GIGABYTE-AI-TOP-ATOM/support

Reinstall the NVIDIA DGX™ Operating System



Reinstalling the system will clear all data stored on the operating system drive. This includes the /home partition, which stores all user documents, software settings, and other personal files.

The NVIDIA DGX™ OS is pre-installed on your device and only requires reinstallation in limited scenarios, such as:

- Replacing storage devices.
- Rebuilding cluster nodes.
- Recovering from a system failure.

Create a Bootable USB Flash Drive

On Windows systems, please refer to:
https://www.gigabyte.com/AI-TOP-PC/GIGABYTE-AI-TOP-ATOM/support

Boot the NVIDIA DGX™ Operating System ISO Image

1. Insert the USB flash drive containing the operating system image into the system.
2. Connect the monitor and keyboard to the system.
3. Power on the system and press F2 when the NVIDIA Logo appears to enter the boot menu.
4. Select the USB drive corresponding to the inserted USB flash drive and boot the system from that drive.

Name: NVIDIA DGX OS for GIGABYTE GA1.1-OTA0-RC1
Version: GA1.1
Description: This release provides a clean, optimized DGX OS environment, restoring your system software and firmware to its original factory state.

How to operate:
1. Download a USB formatting tool applicable to your operating system, and back up your data to a USB flash drive.
2. Download the DGX OS ISO image file, and use the tool to create a bootable USB installer.
3. Insert the USB flash drive into your system, and press Del during startup to enter the BIOS settings.
4. Set boot option #1 to UEFI: USB USB Hard Drive, Partition 1.
5. Save and press F4 to restart.
6. Select the DGX Spark installation option, then install DGX OS GA1.1 for DGX Spark.
7. Wait for the installation to complete (there may be restarts during the process).
8. Upon completion, your system will boot into DGX OS and begin initial setup.

For complete reference information, please refer to the official NVIDIA guide:
https://docs.nvidia.com/dgx/dgx-spark/system-recovery.html#recovery-process-steps

Obtain and Activate AI Models

If you are looking for guidance and examples for customizing and running AI workloads, please refer to the NVIDIA website: https://build.nvidia.com/spark

Firmware Update



This update information applies only to the originator version. Devices from other manufacturers may have different firmware update procedures.

NVIDIA recommends using the DGX™ Dashboard to perform firmware updates on your system. The DGX™ Dashboard provides a user-friendly interface for managing firmware updates and system maintenance tasks.

For detailed information regarding accessing and using the DGX™ Dashboard, please refer to the DGX™ Dashboard documentation.



- Ensure the system is connected to a stable power source.
- Close all running applications and save any work in progress.
- Prepare a system recovery plan.
- Schedule updates during maintenance periods whenever possible.

PRODUCT WARRANTY

- GIGABYTE product warranty terms may differ for each region. The products are subject to regional limited warranty terms based on where the product was purchased.
- Consumers of GIGABYTE AI TOP system products are protected for the AI TOP system from the date of purchase. This warranty applies for the period defined on the product webpage or the label sticker of the product. If you choose the AI TOP systems that marked as the "USED" or "Open-Box" or "Refurbished," GIGABYTE will provide the limited warranty service according to the related policies.
- The warranty service provided by GIGABYTE AI TOP system is valid from the date of purchase. Consumers are required to provide a valid receipt or invoice with the date of purchase and dealer being recognizable. If the Consumer cannot provide valid proof of purchase, GIGABYTE reserves the right to review and authorize the period of warranty service.
- To have the complete warranty service, Consumers must complete the product registration of global warranty service. Some of the services may not be available if the consumers have not completed the product registration process. Register your products at: https://profile.gigabyte.com/Login.aspx?S=GIGABYTE
- GIGABYTE is not the manufacturer of software or operating systems and does not guarantee that software or operating systems will be free from errors, either in isolation or in combination with hardware. For your Product, GIGABYTE will assist the original purchaser with (i) installation of any operating system software purchased from GIGABYTE; (ii) configuration of the operating system software; (iii) setup of the operating system software; and (iv) troubleshooting issues associated with the operating system software.

WARRANTY SERVICE

- When consumers have concerns of product quality during the product warranty period, GIGABYTE will provide free services by the warranty content. The warranty content includes applying the replacement parts of the same specifications or provision of additional services by GIGABYTE. The components provided by the repair service are still consistent with the same warranty criteria as the original products. Parts that have been replaced during service are property of GIGABYTE.
- To ensure the efficiency of warranty service. GIGABYTE will provide repair services to Consumers based on the components supplied by the local authorized service center when Consumers request the service of global warranty in a different region.
- This warranty did not include failure caused by improper installation, operation, cleaning or maintenance, accident, damage, misuse, abuse, non-GIGABYTE modifications to the product, any third-party software programs, normal wear and tear or any other event, act, default or omission outside GIGABYTE' control. For further details, please see Exclusion of Warranty section of this warranty terms.

Personal Data

- The personal data collected during the product registration will be used by GIGABYTE and the authorized service centers in accordance with our Privacy Policy. (https://profile.gigabyte.com/PrivacyPolicy.aspx?l=en-US), solely for the purposes of providing product service.

When using the product

- Read the user manual first and use the Product only according to the user manual.
- Periodically back up your data stored on the Product.
- Keep the original packaging. In case the Product needs to be returned for repair, original packaging provides better protection for the Product during transportation.
- Please check the manual and the GIGABYTE support website for troubleshooting solutions, before contacting customer service.

When contacting the GIGABYTE technical support

- Before contacting GIGABYTE technical support, ensure that You have the Product in front of You and that it is turned on, if feasible. Please also be ready to provide the Product's serial number, the model's name and proof of purchase.
- You will be requested by GIGABYTE to perform some of the Product's troubleshooting tasks or actions, which may include the following:
  - ✓ Restoring the Product's operating system, factory-installed drivers, and applications to the factory default settings.
  - ✓ Installing updates, patches or service packs.
  - ✓ Running diagnostic tools and programs on the Product.
  - ✓ Allowing the GIGABYTE technical support agent to access the Product with remote diagnostic tools (when available).
  - ✓ Performing other reasonable activities requested by GIGABYTE, which will assist in identifying or resolving the problems.
  - ✓ If the problem is not solved remotely, you will have to return the Product to a GIGABYTE Repair Center (this process is called "RMA"). GIGABYTE will issue an RMA number for Your Product. Please record Your RMA Number for tracking purposes.
  - ✓ Describe the problem clearly and completely on the RMA request form.
  - ✓ Enclose a copy of this completed warranty card and a copy of Your sales invoice/receipt detailing the purchase of Your Product. (Please note: GIGABYTE reserves the right to request the original documents.) If you do not provide the requested documents for warranty validation, then the manufacture date of the Product as recorded by GIGABYTE will be deemed to be the start of Warranty Period.
  - ✓ Ensure that you have fully backed up all the data stored on Your Product and removed any personal, confidential, or proprietary information before any service process is started. You agree that GIGABYTE may delete any data, software, or programs installed on the Product without restoring them. GIGABYTE shall not be held liable for the permanent loss, damage, or misuse of your data.

✓ Pack the Product in safe and stable packaging. The original packaging may be useful for this purpose. In any case, the packaging should meet the following requirements: please reference packing guideline, we strongly suggest to retain the original packaging and place the items in a durable carton. GIGABYTEs have the final authority If any damage happed cause by non- GIGABYTE package.

- Use a rigid box with flaps intact
- Remove any labels, hazardous materials indicators, and other previous shipment markings on the box that are no longer applicable
- Wrap all items separately
- Use adequate cushioning material
- Use strong tape designed for shipping
- Do not use string or paper over-wrap
- Use a single address label that has clear, complete delivery and return information
- Place a duplicate address label inside the package
- Please do not send anything but the Product itself unless specifically requested by GIGABYTE
- Please remove any accessories as well as any removable storage devices such as memory cards, discs, flash drives, from the Product. GIGABYTE shall have no liability for the loss, damage or destruction of accessories or removable storage devices, unless they are caused by willful or gross negligent acts by GIGABYTE

✓ Remove or provide any password that You assigned to the Product. If access to the Product is blocked by passwords, then GIGABYTE may not detect and repair all failures of the Product.

✓ GIGABYTE has provided an online query system of service status. Please prepare the RMA number with the information requested in the process to check the status of repair service. You can visit the query system easily by scanning the QR code as follows:

RMA Methods

If RMA is necessary, below are the types of warranty support service that may applicable to the product of service you have purchased. These services may not be available in all countries or regions, and may have fees or restrictions accordingly by different countries. For more details, please contact GIGABYTE call center indicated on GIGABYTE support site at https://www.gigabyte.com/Support

➢ Carry-In

It will be required that the defective product be brought to a GIGABYTE repair center for repair. You need to pay for any transportation, taxes, or duties associated with transporting the product to and from the GIGABYTE repair center location. In addition, you are responsible for insuring any product shipped or returned to a GIGABYTE repair center and assume the risk of loss during transportation.

- Mail-In
  I will be required that the defective product be delivered to a GIGABYTE repair center for repair. You need to prepay any shipping charges, taxes, or duties associated with transporting the product to and from the GIGABYTE repair center location. In addition, you are responsible for insuring any product shipped or returned to a GIGABYTE repair center and assume the risk of loss during transportation. GIGABYTE repair center will ship the repaired product to you without any logistic cost.
- Pick up & return (Option, base on Market and Channel different T&C)
  GIGABYTE repair center will pick up the defective product from your location, repair it, then return it to you. GIGABYTE will incur logistics and insurance fee for the service.

Exclusion of Warranty

1. The product warranty does not cover the bundle accessories like software installation disc/user manual/related packaging consumables, and also the promotional gift items like peripheral devices/carrying bags/backpacks provided by GIGABYTE.
2. If there is any abnormality that cannot be attributed to GIGABYTE during the warranty period, it is not covered by the warranty. The Customer is responsible for the cost of service. Such as described below.
   - Natural disasters, accidents or the customer induced damage.
   - Unauthorized repairs and modifications.
   - Unauthorized dismantling or vandalism.
   - Use components not listed in the approved parts list (QVL) of GIGABYTE AI TOP system products.
   - Operations for testing or evaluation.
3. GIGABYTE reserves the right to determine the responsibility for failure according to the phenomena of issues where the Consumer does not use the product according to the product-related usage.
4. The warranty for extended service or upgrade provided by the Resellers themselves shall be responsible by the Reseller as they promised. The Consumer shall not require service responsibility toward GIGABYTE.
5. The global warranty will be voided if the warranty/serial-number sticker attached to the product is lost or unable to be recognized.
6. GIGABYTE Global Warranty provides the corresponding warranty service according to the local authorized items of each country. When the Consumer proposes the request of cross-regional warranty service outside region of purchase, the service will be provided according to the service availability of the warranty service location.
7. The personal data in the AI TOP system products may be lost due to repairing purpose or the system restoring process. Consumers need to complete the backup of personal data before the product is sent for repair. During the repair process, GIGABYTE will not be responsible for personal data safety and rescue.
8. Shipping and taxes: Shipping and taxes for global warranty will be the responsibility of the User.

9. It is recommended that Users choose the packaging material with complete protection or use the original packaging to send the product to ensure the safety of the product during delivery. GIGABYTE will not be responsible for the loss/damage during transportation.
10. The global repair center provides repair services according to the authorized items. For the technical support requirement of product usage, please contact the local customer service center or eSupport according to the instructions.
11. GIGABYTE Global repair Center will complete the repair service for you as soon as possible after receiving your product, but the repair time will be affected if the repair components are not available locally.
12. The global repair service is only available for the complete system but not the individual modules only such as hard drives, SSDs, or memory.
13. After the product has been used over the warranty period provided by GIGABYTE, the corresponding service fee will be charged according to the repair/replace components and service items.

Regulatory Notices

United States of America, Federal Communications Commission Statement

Supplier's Declaration of Conformity
47 CFR § 2.1077 Compliance Information

Product Name: **Small Scale Server**
Trade Name: **GIGABYTE**
Model Number: **ATAGB10**

Responsible Party – U.S. Contact Information: **G.B.T. Inc.**
Address: 17358 Railroad street, City Of Industry, CA91748
Tel.: 1-626-854-9338
Internet contact information: https://www.gigabyte.com

FCC Compliance Statement:
This device complies with Part 15 of the FCC Rules, Subpart B, Unintentional Radiators.
Operation is subject to the following two conditions: (1) This device may not cause harmful interference, and (2) this device must accept any interference received, including interference that may cause undesired operation.

FEDERAL COMMUNICATIONS COMMISSION INTERFERENCE STATEMENT
This equipment has been tested and found to comply with the limits for a Class B digital device, pursuant to part 15 of the FCC Rules. These limits are designed to provide reasonable protection against harmful interference in a residential installation. This equipment generates, uses and can radiate radio frequency energy and, if not installed and used in accordance with the instructions, may cause harmful interference to radio communications. However, there is no guarantee that interference will not occur in a particular installation. If this equipment does cause harmful interference to radio or television reception, which can be determined by turning the equipment off and on, the user is encouraged to try to correct the interference by one or more of the following measures:
- Reorient or relocate the receiving antenna.
- Increase the separation between the equipment and receiver.
- Connect the equipment into an outlet on a circuit different from that to which the receiver is connected.
- Consult the dealer or an experienced radio/TV technician for help.

CAUTION:
Any changes or modifications not expressly approved by the grantee of this device could void the user's authority to operate the equipment.
This device meets all the other requirements specified in Part 15E, Section 15.407 of the FCC Rules.
This device complies with part 15 of the FCC Rules. Operation is subject to the following two conditions:
(1) This device may not cause harmful interference, and
(2) this device must accept any interference received, including interference that may cause undesired operation.
FCC regulations restrict the operation of this device to indoor use only.
The operation of this device is prohibited on oil platforms, cars, trains, boats, and aircraft, except that operation of this device is permitted in large aircraft while flying above 10,000 feet in the 5.925-6.425 GHz band.
Operation of transmitters in the 5.925-7.125 GHz band is prohibited for control of or communications with unmanned aircraft systems.

RF Exposure warning
This equipment must be installed and operated in accordance with provided instructions and the antenna(s) used for this transmitter must be installed to provide a separation distance of at least 20 cm from all persons and must not be co-located or operating in conjunction with any other antenna or transmitter. End-users and installers must be provide with antenna installation instructions and transmitter operating conditions for satisfying RF exposure compliance.

RF Caution Statement
Warning: Any changes or modifications not expressly approved by party responsible for compliance could void your arthority to operate the equipment.

RF Exposure warning
FCC regulations restrict the operation of this device to indoor use. The operation of this device is prohibited on oil platforms, cars, trains, boats, and aircraft, except that operation of this device is permitted in large aircraft while flying above 10,000 feet.

The following safety precautions should be observed:
- Do not touch or move antenna while the unit is transmitting or receiving.
- Do not hold any component containing the radio such that the antenna is very close or touching any exposed parts of the body, especially the face or eyes, while transmitting.
- Do not operate the radio or attempt to transmit data unless the antenna is connected; if not, the radio may be damaged.
- Use in specific environments:
  - The use of wireless devices in hazardous locations is limited by the constraints posed by the safety directors of such environments.
  - The use of wireless devices on airplanes is governed by the Federal Aviation Administration (FAA).
  - The use of wireless devices in hospitals is restricted to the limits set forth by each hospital.

Antenna use:
In order to comply with FCC RF exposure limits, low gain integrated antennas should be located at a minimum distance of 7.9 inches (20 cm) or more from the body of all persons.

Explosive Device Proximity Warning
Warning: Do not operate a portable transmitter (such as a wireless network device) near unshielded blasting caps or in an explosive environment unless the device has been modified to be qualified for such use.

Antenna Warning
The wireless adapter is not designed for use with high-gain antennas.

Use On Aircraft Caution
Caution: Regulations of the FCC and FAA prohibit airborne operation of radio-frequency wireless devices because their signals could interfere with critical aircraft instruments.

Other Wireless Devices
Safety Notices for Other Devices in the Wireless Network: Refer to the documentation supplied with wireless Ethernet adapters or other devices in the wireless network.

Innovation, Science and Economic Development Canada(ISED) Compliance Statement
This device complies with ISED's licence-exempt RSSs. Operation is subject to the following two conditions: (1) This device may not cause harmful interference, and (2) this device must accept any interference received, including interference that may cause undesired operation.

Le présent appareil est conforme aux CNR d' ISED applicables aux appareils radio exempts de licence.
L'exploitation est autorisée aux deux conditions suivantes : (1) le dispositif ne doit pas produire de brouillage préjudiciable, et (2) ce dispositive doit accepter tout brouillage reçu, y compris un brouillage susceptible de provoquer un fonctionnement indésirable.
CAN ICES-003(B) / NMB-003(B)
Warning:
(i) the device for operation in the band 5150-5250 MHz is only for indoor use to reduce the potential for harmful interference to co-channel mobile satellite systems;
(ii) the maximum antenna gain permitted for devices in the bands 5250-5350 MHz and 5470-5725 MHz shall comply with the e.i.r.p. limit; and (iii) the maximum antenna gain permitted for devices in the band 5725-5825 MHz shall comply with the e.i.r.p. limits specified for point-to-point and non point-to-point operation as appropriate. High-power radars are allocated as primary users (i.e. priority users) of the bands 5250-5350 MHz and 5650-5850 MHz and that these radars could cause interference and/or damage to LE-LAN devices.
Avertissement:
(i) les dispositifs fonctionnant dans la bande 5150-5250 MHz sont réservés uniquement pour une utilisation à l'intérieur afin de réduire les risques de brouillage préjudiciable aux systèmes de satellites mobiles utilisant les mêmes canaux;
(ii) le gain maximal d'antenne permis pour les dispositifs utilisant les bandes 5250-5350 MHz et 5470-5725MHz doit se conformer à la limite de p.i.r.e.;
(iii) le gain maximal d'antenne permis (pour les dispositifs utilisant la bande 5725-5825 MHz) doit se conformer à la limite de p.i.r.e. spécifiée pour l'exploitation point à point et non point à point, selon le cas.
De plus, les utilisateurs de radars de haute puissance sont désignés utilisateurs principaux (c.-à-d., qu'ils ont la priorité) pour les bandes 5250-5350 MHz et 5650-5850 MHz et que ces radars pourraient causer du brouillage et/ou des dommages aux dispositifs LAN-EL.

Radiation Exposure Statement:
This equipment complies with ISED radiation exposure limits set forth for an uncontrolled environment. This equipment should be installed and operated with greater than 20cm between the radiator & your body.

Déclaration d'exposition aux radiations:
Cet équipement est conforme aux limites d'exposition aux rayonnements ISED établies pour un environnement non contrôlé.
Cet équipement doit être installé et utilisé à plus de 20 cm entre le radiateur et votre corps.
Warning:
Devices shall not be used for control of or communications with unmanned aircraft systems.
Devices shall not be used on oil platforms.
Devices shall not be used on aircraft
Devices shall not be used on automobiles.
Devices shall not be used on trains.
Devices shall not be used on maritime vessels.
Operation shall be limited to indoor use only.
Mise en garde:
Les appareils ne doivent pas être utilisés pour contrôler ou communiquer avec des systèmes d'aéronefs sans pilote.
Les appareils ne doivent pas être utilisés sur des plateformes pétrolières.
Les appareils ne doivent pas être utilisés à bord d'aéronefs.
Les appareils ne doivent pas être utilisés à bord d'automobiles.
Les appareils ne doivent pas être utilisés à bord de trains.
Les appareils ne doivent pas être utilisés à bord de navires.
L'utilisation doit être limitée à un usage intérieur uniquement.

Operation of transmitters in the 5.925-7.125 GHz band is prohibited for control of or communications with unmanned aircraft systems.
Devices shall not be used for control of or communications with unmanned aircraft systems.
Operation on oil platforms, automobiles, trains, maritime vessels and aircraft shall be prohibited except for on large aircraft flying above 3,048 m (10,000 ft).
Les appareils ne doivent pas être utilisés pour le contrôle ou la communication avec des systèmes d'aéronefs sans pilote.
L'exploitation sur les plates-formes pétrolières, les automobiles, les trains, les navires maritimes et les avions est interdite, sauf sur les gros avions volant au-dessus de 3 048 m (10 000 ft).

European Union (EU) CE Declaration of Conformity
This device complies with the following directives: Electromagnetic Compatibility Directive 2014/30/EU, Low-voltage Directive 2014/35/EU, Radio Equipment Directive 2014/53/EU, ErP Directive 2009/125/EC, RoHS directive (recast) 2011/65/EU & the 2015/863 Statement. This product has been tested and found to comply with all essential requirements of the Directives.

Déclaration de Conformité aux Directives de l'Union européenne (UE)
Cet appareil portant la marque CE est conforme aux directives de l'UE suivantes: directive Compatibilité Electromagnétique 2014/30/UE, directive Basse Tension 2014/35/UE, directive équipements radioélectriques 2014/53/UE, la directive RoHS II 2011/65/UE & la déclaration 2015/863.
La conformité à ces directives est évaluée sur la base des normes européennes harmonisées applicables.

European Union (EU) CE-Konformitätserklärung
Dieses Produkte mit CE-Kennzeichnung erfüllen folgenden EU-Richtlinien: EMV-Richtlinie 2014/30/EU, Niederspannungsrichtlinie 2014/35/EU, Funkanlagen Richtlinie 2014/53/EU, RoHS-Richtlinie 2011/65/EU erfüllt und die 2015/863 Erklärung. Die Konformität mit diesen Richtlinien wird unter Verwendung der entsprechenden Standards zurEuropäischen Normierung beurteilt.

CE declaração de conformidade
Este produto com a marcação CE estão em conformidade com das seguintes Diretivas UE: Diretiva Baixa Tensão 2014/35/EU; Diretiva CEM 2014/30/EU; Diretiva RSP 2011/65/UE e a declaração 2015/863. A conformidade com estas diretivas é verificada utilizando as normas europeias harmonizadas.

CE Declaración de conformidad
Este producto que llevan la marca CE cumplen con las siguientes Directivas de la Unión Europea: Directiva EMC 2014/30/EU, Directiva de bajo voltaje 2014/35/EU, Directiva de equipamentos de rádio 2014/53/EU, Directiva RoHS 2011/65/EU y la Declaración 2015/863. El cumplimiento de estas directivas se evalúa mediante las normas europeas armonizadas.

CE Dichiarazione di conformità
I prodotti con il marchio CE sono conformi con una o più delle seguenti Direttive UE, come applicabile: Direttiva EMC 2014/30/UE, Direttiva sulla bassa tensione 2014/35/UE, Direttiva di apparecchiature radio 2014/53/UE, Direttiva RoHS 2011/65/EU e Dichiarazione 2015/863. La conformità con tali direttive viene valutata utilizzando gli Standard europei armonizzati applicabili.

Deklaracja zgodności UE Unii Europejskiej
Urządzenie jest zgodne z następującymi dyrektywami: Dyrektywa kompatybilności elektromagnetycznej 2014/30/UE, Dyrektywa niskonapięciowej 2014/35/UE, Dyrektywa urządzeń radiowych 2014/53/UE, Dyrektywa RoHS 2011/65/UE i dyrektywa2015/863. Niniejsze urządzenie zostało poddane testom i stwierdzono jego zgodność z wymaganiami dyrektywy.

ES Prohlášení o shodě
Toto zařízení splňuje požadavky Směrnice o Elektromagnetické kompatibilitě 2014/30/EU, Směrnice o Nízkém napětí 2014/35/EU, Směrnice o rádiových zařízeních 2014/53/EU, Směrnice RoHS 2011/65/EU a 2015/863. Tento produkt byl testován a bylo shledáno, že splňuje všechny základní požadavky směrnic.

EK megfelelőségi nyilatkozata
A termék megfelelnek az alábbi irányelvek és szabványok követelményeinek, azok a kiállításidőpontjában érvényes, aktuális változatában: EMC irányelv 2014/30/EU, Kisfeszültségű villamos berendezésekre vonatkozó irányelv 2014/35/EU, rádióberendezések irányelv 2014/53/EU, RoHS irányelv 2011/65/EU és 2015/863.

Δήλωση συμμόρφωσης ΕΕ
Είναι σε συμμόρφωση με τις διατάξεις των παρακάτω Οδηγιών της Ευρωπαϊκής Κοινότητας: Οδηγία 2014/30/ΕΕ σχετικά με την ηλεκτρομαγνητική συμβατότητα, Οοδηγία χαμηλή τάση 2014/35/EU, Οδηγία 2014/53/ΕΕ σε ραδιοεξοπλισμό, Οδηγία RoHS 2011/65/ΕΕ και 2015/863. Η συμμόρφωση με αυτές τις οδηγίες αξιολογείται χρησιμοποιώντας τα ισχύοντα εναρμονισμένα ευρωπαϊκά πρότυπα.

EU Contact point:
Giga-Byte Technology BV
Steenoven 24, 5626 DK Eindhoven, Netherlands
Email: EU.grp@gigabyte.com

UK contact point:
GBT TECH. CO.LTD
Unit 1 Fitzhamon Court, Wolverton Mill, Milton Keynes, MK12 6LB, United Kingdom

RF Exposure warning
This device meets the EU requirements (2014/53/EU) on the limitation of exposure of the general public to electromagnetic fields by way of health protection.
The device complies with RF specifications when the device used at 20 cm from your body.

European Community Radio Equipment Directive Compliance Statement:

This equipment complies with all the requirements and other relevant provisions of Radio Equipment Directive 2014/53/EU. This equipment is suitable for home and office use in all the European Community Member States and EFTA Member States. The low band 5.15 -5.35 GHz is for indoor use only.

CE

AT	BE	BG	CH	CY	CZ	DE
DK	EE	EL	ES	FI	FR	HR
HU	IE	IS	IT	LI	LT	LU
LV	MT	NL	PL	PT	RO	SE
SI	SK	TR				

Wireless module manufacturer: MediaTek Inc.
Wireless module model name: MT7925B14L

The device is restricted to indoor use only when operating in the 5150 to 5350 MHz frequency range.
This device is intended for indoor use only when operating in the frequency range 5945 to 6425 MHz which is applicable in countries that support WiFi 6E.

CE RED RF Output table (Directive 2014/53/EU)
MT7925B14L output power table:

Frequency Band	Max. EIRP (dBm)	Max. EIRP (mW)
2400.0 - 2483.5 MHz	20.0	100
5150.0 - 5350.0 MHz	23.0	200
5470.0 – 5725.0 MHz	23.0	200
5725.0 – 5875.0 MHz	14.0	25
5925.0 – 6425.0 MHz	23.0	100

UKCA RF Output table (The Radio Equipment Regulations 2017)
MT7925B14L output power table:

Frequency Band	Max. EIRP (dBm)	Max. EIRP (mW)
2400.0 - 2483.5 MHz	20.0	100
5150.0 - 5350.0 MHz	23.0	200
5470.0 – 5725.0 MHz	23.0	200
5725.0 – 5875.0 MHz	14.0	25
5925.0 – 6425.0 MHz	23.0	100

Taiwan NCC Wireless Statements / 無線設備警告聲明：
低功率電波輻射性電機管理辦法
(1) 取得審驗證明之低功率射頻器材，非經核准，公司、商號或使用者均不得擅自變更頻率、加大功率或變更原設計之特性及功能。低功率射頻器材之使用不得影響飛航安全及干擾合法通信；經發現有干擾現象時，應立即停用，並改善至無干擾時方得繼續使用。前述合法通信，指依電信管理法規定作業之無線電通信。低功率射頻器材須忍受合法通信或工業、科學及醫療用電波輻射性電機設備之干擾。
(2) 應避免影響附近雷達系統之操作。

※ 產品必須貼BSMI標誌, 代表符合BSMI標準的規定。
※ 本產品設備歸類為B級資訊技訊設備(ITE)
※ 注意: 最高操作溫度35°C.
※ 連接電源插座之前, 請確認電源線規格是否符合CNS標準。
電源變壓器資訊:
輸入電壓: 100-240 Vac
輸入頻率: 50-60Hz
額定輸出電流: 48.0Vdc, 5.0A

**USB Type-C 連接埠:
資料傳輸(R/W): USB 3.2 Gen 2x2
影音傳輸(Display): 4K(3840x2160) 120Hz / 5K(5120x2880) 60Hz / 8K(7860x4320) 30Hz
Power Delivery IN: no support input, total output power 30W
Type-c輸出: (單一輸出5V/3A;同時輸出時，一個為5V/3A，其他各5V/1.5A)



請勿將電池當作一般垃圾棄置。

廢電池請回收

B급 기기(가정용 방송통신기기) :
이 기기는 가정용 (B 급) 으로 전자파적합등록을 한 기기로서 주로 가정에서 사용하는것을 목적으로 하며 , 모든 지역에서 사용할 수 있습니다.
5,25 GHz - 5,35 GHz 대역을 사용하는 무선 장치는 실내에서만 사용하도록 제한됩니다.

Japan VCCI Class B Statement

この装置は，クラスB機器です。この装置は，住宅環境で使用することを目的としていますが，この装置がラジオやテレビジョン受信機に近接して使用されると，受信障害を引き起こすことがあります。
取扱説明書に従って正しい取り扱いをして下さい。
VCCI – B

Wireless Statement:
5.15-5.35 GHz及び6 GHz LPI: 屋内利用限定高出力データ通信システムとの通信を除く

安全にご使用いただくために
接地接続は必ず電源プラグを電源につなぐ前に行って下さい。
また、接地接続を外す場合は、必ず電源プラグを電源から切り離してから行って下さい。
電源コード 警語:
- 製品には、同梱された電源コードセットを使用すること
- 同梱された電源コードセットは、他の製品に使用しないこと

Aviso da Anatel:
"Includesproduct approved by Anatel under number 04725-24-04076"
“Este equipamento não tem direito à proteção contra interferência prejudicial e não pode causar interferência em sistemas devidamente autorizados. Para mais informações, consulte o site da Anatel: https://www.gov.br/anatel/pt-br.”

Wireless module country approvals:
Wireless module manufacturer: MediaTek Inc.
Wireless module model name: MT7925B14L

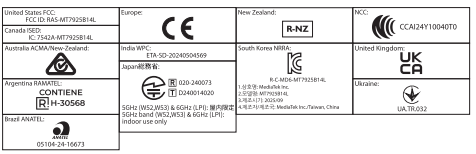

Laser Safety
Use certified Optical Fiber Transceiver.
Warning: Fiber Optic Port Safety:

CLASS 1
LASER PRODUCT

When using a fiber optic port, never look at the transmit laser while it is powered on. Also, never look directly at the fiber TX port and fiber cable ends when they are powered on.

Avertissement: Ports pour fibres optiques - sécurité sur le plan optique:

PRODUIT LASER
DE CLASSE 1

Utilisez un émetteur/récepteur à fibre optique certifié. Ne regardez jamais le laser tant qu'il est sous tension. Ne regardez jamais directement le port TX (Transmission) à fibres optiques et les embouts de câbles à fibres optiques tant qu'ils sont sous tension.

警告：光纤端口安全:

1类激光设备

使用光纤端口时，切勿在其电源处于开启状态时注视发射激光器。此外，切勿在光纤TX端口和光纤端头的电源处于开启状态时直接注视它们。

⚠ WARNING

- **INGESTION HAZARD:** This product contains a button cell or coin battery.
- **DEATH** or serious injury can occur if ingested.
- A swallowed button cell or coin battery can cause **Internal Chemical Burns** in as little as **2 hours**.
- **KEEP** new and used batteries **OUT OF REACH of CHILDREN**
- **Seek immediate medical attention** if a battery is suspected to be swallowed or inserted inside any part of the body.



- Battery type: CR2032, voltage rating: +3VDC.
- Non-rechargeable batteries are not to be recharged.
- Remove and immediately recycle or dispose of used batteries, batteries from equipment not used for an extended period of time according to local regulations and keep away from children. Do NOT dispose of batteries in household trash or incinerate.
- Even used batteries may cause severe injury or death.
- Do not force discharge, recharge, disassemble, heat above (manufacturer's specified temperature rating) or incinerate. Doing so may result in injury due to venting, leakage or explosion resulting in chemical burns.
- For treatment information, call a local poison control center.
- The product contains non-replaceable batteries.
- For service person only:
  CAUTION: Risk of fire explosion if the battery is replaced by an incorrect type. Replace the battery only with the same type.
  警告：若置換不同型式之電池有起火或爆炸風險。
- à l'attention du personnel de maintenance :
  ATTENTION: Risque d'incendie et d'explosion en cas de remplacement de la batterie par un modèle incorrect. Remplacez la batterie uniquement par une batterie de même type.

European Union (EU) RoHS (recast) Directive 2011/65/EU & the European Commission Delegated Directive (EU) 2015/863 Statement
GIGABYTE prohibits the intentional addition of hazardous substances (Pb, Hg, Cd, Cr^{6+}, PBB, PBDE, DEHP, BBP, DBP, and DIBP), except for uses permitted under applicable RoHS exemptions. Incidental presence of these substances shall comply with the applicable maximum concentration values (MCVs) specified in Directive 2011/65/EU, as amended by Directive (EU) 2015/863.

European Union (EU) Community Waste Electrical & Electronic Equipment (WEEE) Directive Statement
GIGABYTE will fulfill the national laws as interpreted from the 2012/19/EU WEEE (Waste Electrical and Electronic Equipment) (recast) directive. The WEEE Directive specifies the treatment, collection, recycling and disposal of electric and electronic devices and their components. Under the Directive, used equipment must be marked, collected separately, and disposed of properly.

WEEE Symbol Statement



The symbol shown below is on the product or on its packaging, which indicates that this product must not be disposed of with other waste. Instead, the device should be taken to the waste collection centers for activation of the treatment, collection, recycling and disposal procedure.

For more information about where you can drop off your waste equipment for recycling, please contact your local government office, your household waste disposal service or where you purchased the product for details of environmentally safe recycling.

Before disposing of this device, please delete all personal data stored on it to protect your privacy.

Battery Information -Regulation (EU) 2023/1542



SCAN FOR BATTERY INFORMATION

European Union—Disposal and recycling information
GIGABYTE Recycling Program (available in some regions)



This symbol indicates that this product and/or battery should not be disposed of with household waste. You must use the public collection system to return, recycle, or treat them in compliance with the local regulations.

End of Life Directives-Recycling



The symbol shown below is on the product or on its packaging, which indicates that this product must not be disposed of with other waste. Instead, the device should be taken to the waste collection centers for activation of the treatment, collection, recycling and disposal procedure.

For any support regarding the EU General Product Safety Regulation (GPSR), please contact Giga-Byte Technology B.V. Steenoven 24, 5626 DK Eindhoven, Netherlands.
Email: EU.grp@gigabyte.com





Contact Us

GIGA-BYTE TECHNOLOGY CO., LTD.
Address: No.6, Baoqiang Rd., Xindian Dist., New Taipei City 231
TEL: +886-2-8912-4000, FAX: +886-2-8912-4005
Tech. and Non-Tech. Support (Sales/Marketing) : https://esupport.gigabyte.com
WEB address (English): https://www.gigabyte.com
WEB address (Chinese): https://www.gigabyte.com/tw

- **GIGABYTE eSupport**

  To submit a technical or non-technical (Sales/Marketing) question, please link to: https://esupport.gigabyte.com

