Thinking of you
Electrolux

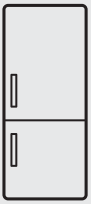

ENN2853COW

EN FRIDGE FREEZER

USER MANUAL

CONTENTS

1. SAFETY INSTRUCTIONS 3
2. CONTROL PANEL 5
3. DAILY USE 8
4. HELPFUL HINTS AND TIPS 10
5. CARE AND CLEANING 11
6. WHAT TO DO IF... 12
7. INSTALLATION 14
8. NOISES 21
9. TECHNICAL DATA 23

WE'RE THINKING OF YOU

Thank you for purchasing an Electrolux appliance. You've chosen a product that brings with it decades of professional experience and innovation. Ingenious and stylish, it has been designed with you in mind. So whenever you use it, you can be safe in the knowledge that you'll get great results every time.

Welcome to Electrolux.

Visit our website for:

Get usage advice, brochures, trouble shooter, service information:
www.electrolux.com

Register your product for better service:
www.electrolux.com/productregistration

Buy Accessories, Consumables and Original spare parts for your appliance:
www.electrolux.com/shop

CUSTOMER CARE AND SERVICE

We recommend the use of original spare parts.
When contacting Service, ensure that you have the following data available.
The information can be found on the rating plate. Model, PNC, Serial Number.

Warning / Caution-Safety information

General information and tips

Environmental information

Subject to change without notice.

1. ⚠ SAFETY INSTRUCTIONS

In the interest of your safety and to ensure the correct use, before installing and first using the appliance, read this user manual carefully, including its hints and warnings. To avoid unnecessary mistakes and accidents, it is important to ensure that all people using the appliance are thoroughly familiar with its operation and safety features. Save these instructions and make sure that they remain with the appliance if it is moved or sold, so that everyone using it through its life will be properly informed on appliance use and safety.
For the safety of life and property keep the precautions of these user's instructions as the manufacturer is not responsible for damages caused by omission.

1.1 Children and vulnerable people safety

- This appliance is not intended for use by persons (including children) with reduced physical, sensory or mental capabilities, or lack of experience and knowledge, unless they have been given supervision or instruction concerning use of the appliance by a person responsible for their safety.

  Children should be supervised to ensure that they do not play with the appliance.
- Keep all packaging well away from children. There is risk of suffocation.
- If you are discarding the appliance pull the plug out of the socket, cut the connection cable (as close to the appliance as you can) and remove the door to prevent playing children to suffer electric shock or to close themselves into it.
- If this appliance featuring magnetic door seals is to replace an older appliance having a spring lock (latch) on the door or lid, be sure to make that spring lock unusable before you discard the old appliance. This will prevent it from becoming a death trap for a child.

1.2 General safety

⚠ **WARNING!**

Keep ventilation openings, in the appliance enclosure or in the built-in structure, clear of obstruction.

- The appliance is intended for keeping foodstuff and/or beverages in a normal household and similar applications such as:
  - staff kitchen areas in shops, offices and other working environments;
  - farm houses and by clients in hotels, motels and other residential type environments;
  - bed and breakfast type environments;
  - catering and similar non-retail applications.
- Do not use a mechanical device or any artificial means to speed up the thawing process.
- Do not use other electrical appliances (such as ice cream makers) inside of refrigerating appliances, unless they are approved for this purpose by the manufacturer.
- Do not damage the refrigerant circuit.
- The refrigerant isobutane (R600a) is contained within the refrigerant circuit of the appliance, a natural gas with a high level of environmental compatibility, which is nevertheless flammable.

  During transportation and installation of the appliance, be certain that none of the components of the refrigerant circuit become damaged.

  If the refrigerant circuit should become damaged:
  - avoid open flames and sources of ignition
  - thoroughly ventilate the room in which the appliance is situated
- It is dangerous to alter the specifications or modify this product in any way. Any damage to the cord may cause a short-circuit, fire and/or electric shock.

⚠ **WARNING!**
Any electrical component (power cord, plug, compressor) must be replaced by a certified service agent or qualified service personnel to avoid hazard.

1. Power cord must not be lengthened.
2. Make sure that the power plug is not squashed or damaged by the back of the appliance. A squashed or damaged power plug may overheat and cause a fire.
3. Make sure that you can come to the mains plug of the appliance.
4. Do not pull the mains cable.
5. If the power plug socket is loose, do not insert the power plug. There is a risk of electric shock or fire.
6. You must not operate the appliance without the lamp cover (if foreseen) of interior lighting.

- This appliance is heavy. Care should be taken when moving it.
- Do not remove nor touch items from the freezer compartment if your hands are damp/wet, as this could cause skin abrasions or frost/freezer burns.
- Avoid prolonged exposure of the appliance to direct sunlight.
- Bulb lamps (if foreseen) used in this appliance are special purpose lamps selected for household appliances use only. They are not suitable for household room illumination.

1.3 Daily Use

- Do not put hot pot on the plastic parts in the appliance.
- Do not store flammable gas and liquid in the appliance, because they may explode.
- Do not place food products directly against the air outlet on the rear wall. (If the appliance is Frost Free)
- Frozen food must not be re-frozen once it has been thawed out.
- Store pre-packed frozen food in accordance with the frozen food manufacturer's instructions.
- Appliance's manufacturers storage recommendations should be strictly adhered to. Refer to relevant instructions.
- Do not place carbonated or fizzy drinks in the freezer compartment as it creates pressure on the container, which may cause it to explode, resulting in damage to the appliance.
- Ice lollies can cause frost burns if consumed straight from the appliance.

1.4 Care and cleaning

- Before maintenance, switch off the appliance and disconnect the mains plug from the mains socket.
- Do not clean the appliance with metal objects.
- Do not use sharp objects to remove frost from the appliance. Use a plastic scraper.
- Regularly examine the drain in the refrigerator for defrosted water. If necessary, clean the drain. If the drain is blocked, water will collect in the bottom of the appliance.

1.5 Installation



For electrical connection carefully follow the instructions given in specific paragraphs.

- Unpack the appliance and check if there are damages on it. Do not connect the appliance if it is damaged. Report possible damages immediately to the place you bought it. In that case retain packing.
- It is advisable to wait at least four hours before connecting the appliance to allow the oil to flow back in the compressor.
- Adequate air circulation should be around the appliance, lacking this leads to overheating. To achieve sufficient ventilation follow the instructions relevant to installation.
- Wherever possible the back of the product should be against a wall to avoid touching or catching warm parts (compressor, condenser) to prevent possible burn.
- The appliance must not be located close to radiators or cookers.
- Make sure that the mains plug is accessible after the installation of the appliance.
- Connect to potable water supply only (If a water connection is foreseen).

1.6 Service

- Any electrical work required to do the servicing of the appliance should be carried out by a qualified electrician or competent person.
- This product must be serviced by an authorized Service Centre, and only genuine spare parts must be used.

1.7 Environment Protection

This appliance does not contain gasses which could damage the ozone layer, in either its refrigerant circuit or insulation materials. The appliance shall not be discarded together with the urban refuse and rubbish. The insulation foam contains flammable gases: the appliance shall be disposed according to the applicable regulations to obtain from your local authorities. Avoid damaging the cooling unit, especially at the rear near the heat exchanger. The materials used on this appliance marked by the symbol ♺ are recyclable.

2. CONTROL PANEL

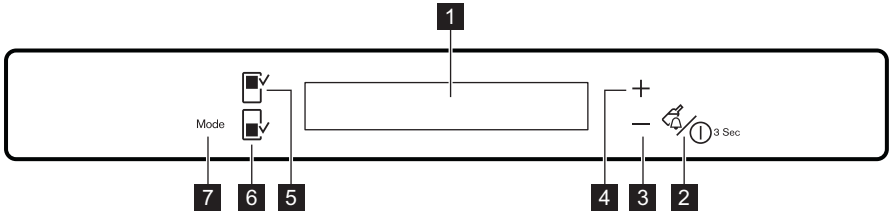

1 Display
2 Drink Chill button and Appliance ON/ OFF button
3 Temperature colder button
4 Temperature warmer button
5 Fridge Compartment button
6 Freezer Compartment button
7 Mode button

It is possible to change predefined sound of buttons to a loudly one by pressing together Mode button and Temperature colder button for some seconds. Change is reversible.

2.1 Display

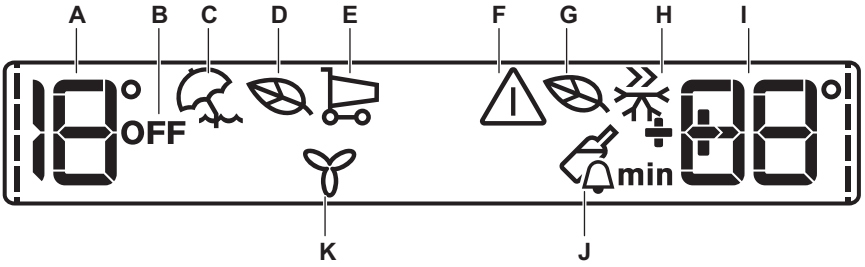

A) Fridge temperature indicator
B) Fridge OFF indicator
C) HolidayMode
D) Fridge EcoMode
E) ShoppingMode
F) Alarm indicator
G) Freezer EcoMode
H) FastFreeze mode

I) Freezer temperature indicator
J) DrinksChill mode
K) FreeStore mode

After selection of the fridge or freezer compartment the animation ---- starts.
After selection of the temperature the animation flashes for a few minutes.

2.2 Switching on the appliance

To switch on the appliance do these steps:

1. Connect the mains plug to the power socket.
2. The temperature indicators show the set default temperature.

If DEMO appears on the Display, the appliance is in demonstration mode: refer to “WHAT TO DO IF....” paragraph.
To select a different set temperature refer to "Temperature regulation".

2.3 Switching off the fridge

To switch off the fridge:

1. Press the Fridge Compartment button for few seconds.
2. The fridge OFF indicator is shown.

2.4 Switching on the fridge

To switch on the fridge:

1. Press the Fridge Compartment button.

   The fridge OFF indicator goes off.

To select a different set temperature refer to "Temperature regulation".

2.5 Switching off

To switch off the appliance do these steps:

1. Press the Appliance ON/OFF button for 3 seconds.
2. The display switches off.
3. To disconnect the appliance from the power disconnect the mains plug from the power socket.

2.6 Temperature regulation

Select the fridge or freezer compartment.
Press the temperature button to set the temperature.
Set default temperature:

- +4°C for the fridge
- -18°C for the freezer

The temperature indicators show the set temperature.
The set temperature will be reached within 24 hours.

After a power failure the set temperature remains stored.

2.7 HolidayMode

This function allows you to keep the refrigerator closed and empty during a long holiday period without the formation of a bad smell.

The fridge compartment must be empty with holiday function on.

To switch on the function:

1. Press the Mode button until the corresponding icon appears.

   The fridge temperature indicator shows the set temperature.

To switch off the function:

1. Press the Mode button to select another function or nothing.

The function switches off by selecting a different fridge set temperature.

2.8 EcoMode for Fridge and Freezer Compartment

For optimal food storage select the EcoMode .
To switch on the function:

1. Select the fridge/freezer compartment.
2. Press the Mode button until the corresponding icon appears.

   The temperature indicator shows the set temperature:

   – for the fridge: +4°C
   – for the freezer: -18°C

To switch off the function:

1. Select the fridge/freezer compartment.
2. Press the Mode button to select another function or nothing.

The function switches off by selecting a different set temperature.

2.9 ShoppingMode

If you need to insert a large amount of warm food, for example after doing the grocery shopping, we suggest activating the ShoppingMode to chill the products more rapidly and to avoid warming the other food which is already in the refrigerator.
To switch on the function:

1. Press the Mode button until the corresponding icon appears.

The ShoppingMode switches off automatically after approximately 6 hours.
To switch off the function before its automatic end:

1. Press the Mode button to select another function or nothing.

The function switches off by selecting a different fridge set temperature.

2.10 FastFreeze mode

To switch on the function:

1. Select the freezer compartment.
2. Press the Mode button until the corresponding icon appears.

This function stops automatically after 52 hours.
To switch off the function before its automatic end:

1. Select the freezer compartment.
2. Press the Mode button to select another function or nothing.

The function switches off by selecting a different freezer set temperature.

2.11 DrinksChill mode

The DrinksChill mode is to be used to set an acoustic alarm at the preferred time, useful for example when a recipe requires to cool down a mixture for a certain period of time, or when a reminder is needed in order not to forget the bottles placed in the freezer for fast cooling.
To switch on the function:

1. Press the DrinkChill button.
   The DrinksChill indicator appears. The Timer shows the set value (30 minutes).
2. Press the Temperature colder button and Temperature warmer button to change the Timer set value from 1 to 90 minutes.
3. The Timer start to flash (min).

At the end of the countdown the DrinksChill indicator flashes and an audible alarm sounds:

1. Remove any drinks contained in the freezer compartment.
2. Press the DrinkChill button to switch off the sound and terminate the function.

It is possible to deactivate the function at any time during the countdown:

1. Press the DrinkChill button.
2. The DrinksChill indicator goes off.

It is possible to change the time during the countdown and at the end by pressing the Temperature colder button and the Temperature warmer button.

2.12 High temperature alarm

An increase in the temperature in the freezer compartment (for example due to an earlier power failure) is indicated by:

- flashing the alarm and freezer temperature indicators
- sounding of buzzer.

To reset the alarm:

1. Press any button.
2. The buzzer switches off.
3. The freezer temperature indicator shows the highest temperature reached for a few seconds. Then show again the set temperature.
4. The alarm indicator continue to flash until the normal conditions are restored.

When the alarm has returned the alarm indicator goes off.

2.13 Door open alarm

An acoustic alarm will sound if the door is left open for a few minutes. The door open alarm conditions are indicated by:

- flashing Alarm indicator
- acoustic buzzer

When normal conditions are restored (door closed), the alarm will stop.

During the alarm, the buzzer can be switched off by pressing any button.

2.14 FreeStore mode

To switch on the function:

1. Press the Mode button until the corresponding icon appears.

To switch off the function:

1. Press the Mode button to select another function or nothing.

If the function is activated automatically the FreeStore indicator is not shown (refer to "Daily use"). The activation of the FreeStore mode increases the energy consumption.

3. DAILY USE

3.1 Cleaning the interior

Before using the appliance for the first time, wash the interior and all internal accessories with lukewarm water and some neutral soap so as to remove the typical smell of a brand-new product, then dry thoroughly.

Do not use detergents or abrasive powders, as these will damage the finish.

If DEMO appears on the Display, the appliance is in demonstration mode: refer to “WHAT TO DO IF...” paragraph.

3.2 Freezing fresh food

The freezer compartment is suitable for freezing fresh food and storing frozen and deep-frozen food for a long time.
To freeze fresh food activate the Fast Freeze function at least 24 hours before placing the food to be frozen in the freezer compartment.
Place the fresh food to be frozen in the in the upper part of the freezer, as this is the coldest point.
The maximum amount of food that can be frozen in 24 hours is specified on the **rating plate**, a label located on the inside of the appliance.
The freezing process lasts 24 hours: during this period do not add other food to be frozen.

3.3 Storage of frozen food

When first starting-up or after a period out of use, before putting the products in the compartment let the appliance run at least 2 hours on the higher settings.

In the event of accidental defrosting, for example due to a power failure, if the power has been off for longer than the value shown in the technical characteristics chart under "rising time", the defrosted food must be consumed quickly or cooked immediately and then re-frozen (after cooling).

3.4 Thawing

Deep-frozen or frozen food, prior to being used, can be thawed in the refrigerator compartment or at room temperature, depending on the time available for this operation.
Small pieces may even be cooked still frozen, directly from the freezer: in this case, cooking will take longer.

3.5 Ice-cube production

This appliance is equipped with one or more trays for the production of ice-cubes. Fill these trays with water, then put them in the freezer compartment.

Do not use metallic instruments to remove the trays from the freezer.

3.6 Cold accumulators

One or more cold accumulators are supplied in the freezer; these increase the

length of time for which food will keep in the event of a power failure or breakdown.

3.7 Movable shelves

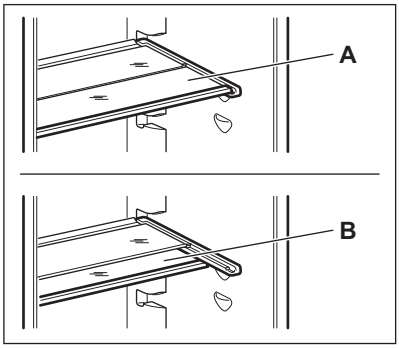

The walls of the refrigerator are equipped with a series of supports so that the shelves can be positioned as desired.
For better use of space, the front half-shelves can be placed under the rear ones.

3.8 Positioning the door shelves

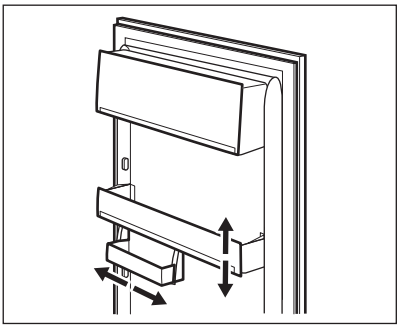

To permit storage of food packages of various sizes, the door shelves can be placed at different heights.
To make these adjustments proceed as follow: gradually pull the shelf in the direction of the arrows until it comes free, then reposition as required.

3.9 Humidity control

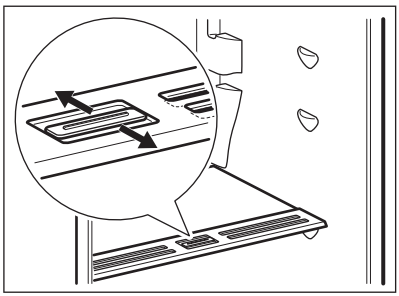

The glass shelf incorporates a device with slits (adjustable by means of a sliding lever), which makes it possible to regulate the temperature in the vegetable drawer(s).
When the ventilation slots are closed: the natural moisture content of the food in the fruit and vegetable compartments is preserved for longer.
When the ventilation slots are opened: more air circulation results in a lower air moisture content in the fruit and vegetable compartments.

3.10 FreeStore

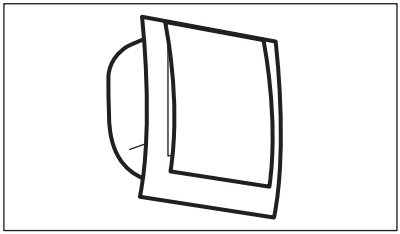

The refrigerator compartment is equipped with a device that allows for rapid cooling of foods and more uniform temperature in the compartment.
This device activates by itself when needed, for example for a quick temperature recovering after door opening or when the ambient temperature is high.
Allows you to switch on the device manually when needed (refer to "FreeStore Function").

The FreeStore device stops when the door is open and restarts immediately after the door closing.

3.11 Low Temperature compartment

The models equipped with this feature in the fridge part, it is indicated for a best conservation of fresh foods as fish, meat, seafood, etc.
It is placed in the lower part, directly above of the vegetable conservation drawer.

4. HELPFUL HINTS AND TIPS

4.1 Hints for energy saving

- Do not open the door frequently or leave it open longer than absolutely necessary.
- If the ambient temperature is high and the Temperature Regulator is set to low temperature and the appliance is fully loaded, the compressor may run continuously, causing frost or ice on the evaporator. If this happens, set the Temperature Regulator toward warmer settings to allow automatic defrosting and so a saving in electricity consumption.

4.2 Hints for fresh food refrigeration

To obtain the best performance:

- do not store warm food or evaporating liquids in the refrigerator
- do cover or wrap the food, particularly if it has a strong flavour
- position food so that air can circulate freely around it

4.3 Hints for refrigeration

Useful hints:
Meat (all types) : wrap in polythene bags and place on the glass shelf above the vegetable drawer.
For safety, store in this way only one or two days at the most.
Cooked foods, cold dishes, etc..: these should be covered and may be placed on any shelf.
Fruit and vegetables: these should be thoroughly cleaned and placed in the special drawer(s) provided.
Butter and cheese: these should be placed in special airtight containers or wrapped in aluminium foil or polythene bags to exclude as much air as possible.
Milk bottles: these should have a cap and should be stored in the bottle rack on the door.

Bananas, potatoes, onions and garlic, if not packed, must not be kept in the refrigerator.

4.4 Hints for freezing

To help you make the most of the freezing process, here are some important hints:

- the maximum quantity of food which can be frozen in 24 hrs. is shown on the rating plate;
- the freezing process takes 24 hours. No further food to be frozen should be added during this period;
- only freeze top quality, fresh and thoroughly cleaned, foodstuffs;
- prepare food in small portions to enable it to be rapidly and completely frozen and to make it possible subsequently to thaw only the quantity required;
- wrap up the food in aluminium foil or polythene and make sure that the packages are airtight;
- do not allow fresh, unfrozen food to touch food which is already frozen, thus avoiding a rise in temperature of the latter;
- lean foods store better and longer than fatty ones; salt reduces the storage life of food;
- water ices, if consumed immediately after removal from the freezer compartment, can possibly cause the skin to be freeze burnt;
- it is advisable to show the freezing in date on each individual pack to enable you to keep tab of the storage time.

4.5 Hints for storage of frozen food

To obtain the best performance from this appliance, you should:

- make sure that the commercially frozen foodstuffs were adequately stored by the retailer;
- be sure that frozen foodstuffs are transferred from the foodstore to the freezer in the shortest possible time;
- not open the door frequently or leave it open longer than absolutely necessary;
- once defrosted, food deteriorates rapidly and cannot be refrozen;
- do not exceed the storage period indicated by the food manufacturer.

5. CARE AND CLEANING

CAUTION!
Unplug the appliance before carrying out any maintenance operation.

This appliance contains hydrocarbons in its cooling unit; maintenance and recharging must therefore only be carried out by authorized technicians.

5.1 Periodic cleaning

The equipment has to be cleaned regularly:

- Many proprietary kitchen surface cleaners contain chemicals that can attack/damage the plastics used in this appliance. For this reason use a soft cloth rinsed in warm water and neutral soap emulsion for cleaning internal and external surfaces.

Do not use detergents or abrasive paste for external surfaces as these will damage the paint, or stainless steel anti finger print coating.

- regularly check the door seals and wipe clean to ensure they are clean and free from debris.
- rinse and dry thoroughly.
- Clean the condenser (black grill) and the compressor at the back of the appliance with a brush. This operation will improve the performance of the appliance and save electricity consumption.

Do not pull, move or damage any pipes and/or cables inside the cabinet.
Take care of not to damage the cooling system.

After cleaning, reconnect the equipment to the mains supply.

5.2 Periods of non-operation

When the appliance is not in use for long periods, take the following precautions:

- **disconnect the appliance from electricity supply**
- remove all food
- defrost (if foreseen) and clean the appliance and all accessories
- leave the door/doors ajar to prevent unpleasant smells.

If the cabinet will be kept on, ask somebody to check it once in a while to prevent the food inside from spoiling in case of a power failure.

5.3 Defrosting the refrigerator

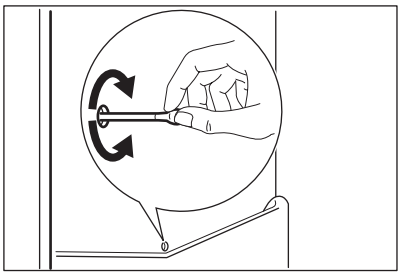

Frost is automatically eliminated from the evaporator of the refrigerator compartment every time the motor compressor stops, during normal use. The defrost water drains out through a drain hole into a special container at the back of the appliance, over the motor compressor, where it evaporates.
It is important to periodically clean the defrost water drain hole in the middle of the refrigerator compartment channel to prevent the water overflowing and dripping onto the food inside.

5.4 Defrosting of the freezer

The freezer compartment of this model, on the other hand, is a "no frost" type. This means that there is no buildup of frost when it is in operation, neither on the internal walls nor on the foods.

The absence of frost is due to the continuous circulation of cold air inside the compartment, driven by an automatically controlled fan.

6. WHAT TO DO IF…

WARNING!
Before troubleshooting, disconnect the mains plug from the mains socket.
Only a qualified electrician or competent person must do the troubleshooting that is not in this manual.

There are some sounds during normal use (compressor, refrigerant circulation).

Problem	Possible cause	Solution
The appliance does not operate. The lamp does not operate.	The appliance is switched off.	Switch on the appliance.

Problem	Possible cause	Solution
	The mains plug is not connected to the mains socket correctly.	Connect the mains plug to the mains socket correctly.
	The appliance has no power. There is no voltage in the mains socket.	Connect a different electrical appliance to the mains socket. Contact a qualified electrician.
The lamp does not work.	The lamp is in stand-by.	Close and open the door.
	The lamp is defective.	Refer to "Replacing the lamp".
The compressor operates continually.	The temperature is not set correctly.	Set a higher temperature.
	The door is not closed correctly.	Refer to "Closing the door".
	The door has been opened too frequently.	Do not keep the door open longer than necessary.
	The product temperature is too high.	Let the product temperature decrease to room temperature before storage.
	The room temperature is too high.	Decrease the room temperature.
Water flows on the rear plate of the refrigerator.	During the automatic defrosting process, frost defrosts on the rear plate.	This is correct.
Water flows into the refrigerator.	The water outlet is clogged.	Clean the water outlet.
	Products prevent that water flows into the water collector.	Make sure that products do not touch the rear plate.
Water flows on the ground.	The melting water outlet does not flow in the evaporative tray above the compressor.	Attach the melting water outlet to the evaporative tray.
The temperature in the appliance is too low.	The temperature regulator is not set correctly.	Set a higher temperature.
The temperature in the appliance is too high.	The temperature regulator is not set correctly.	Set a lower temperature.
	Many products are stored at the same time.	Store less products at the same time.

Problem	Possible cause	Solution
The temperature in the refrigerator is too high.	There is no cold air circulation in the appliance.	Make sure that there is cold air circulation in the appliance.
The temperature in the freezer is too high.	Products are too near to each other.	Store products so that there is cold air circulation.
Upper or lower square is shown in the temperature display.	An error has occurred in measuring the temperature.	Call your service representative (the cooling system will continue to keep food products cold, but temperature adjustment will not be possible).
DEMO appears on the Display.	The appliance is in demonstration mode (DEMO).	Keep pressed approximately 10 sec. the Light button since a long sound of buzzer is heard and the Display shut off for a short while: appliance start works regularly.

6.1 Replacing the lamp

The appliance is equipped with a longlife LED light.
Only service is allowed to replace the lighting device. Contact your Service Center.

6.2 Closing the door

1. Clean the door gaskets.
2. If necessary, adjust the door. Refer to "Installation".
3. If necessary, replace the defective door gaskets. Contact the Service Center.

7. INSTALLATION

WARNING!
Read the "Safety Information" carefully for your safety and correct operation of the appliance before installing the appliance.

7.1 Positioning

Install this appliance at a location where the ambient temperature corresponds to the climate class indicated on the rating plate of the appliance:

Climate class	Ambient temperature
SN	+10°C to + 32°C
N	+16°C to + 32°C
ST	+16°C to + 38°C
T	+16°C to + 43°C

7.2 Electrical Connection

CAUTION!
Any electrical work required to install this appliance should be carried out by a qualified electrician or competent person.

WARNING!
This appliance must be earthed. The manufacturer declines any liability should these safety measures not be observed.

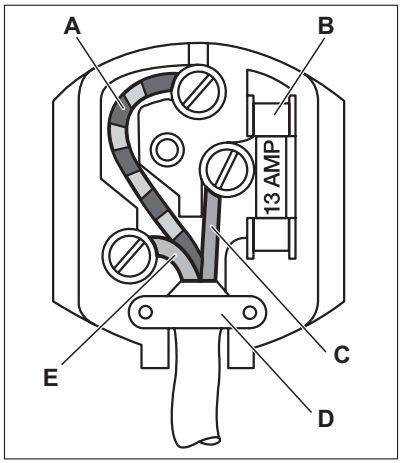

The wires in the mains lead are coloured in accordance with the following code:

A	Green and Yellow:	Earth
C	Brown:	Live
E	Blue:	Neutral

As the colours of the wires in the mains lead of this appliance may not correspond with the coloured markings identifying the terminals in your plug, proceed as follows:

1. Connect the wire coloured green and yellow to the terminal marked either with the letter “E“ or by the earth symbol ⏚ or coloured green and yellow.
2. Connect the wire coloured blue to the terminal either marked with the letter “N“ or coloured black.
3. Connect the wire coloured brown to the terminal either marked with the “L“ or coloured red.
4. Check that no cut, or stray strands of wire is present and the cord clamp D is secure over the outer sheath.
5. Make sure the electricity supply voltage is the same as that indicated on the appliance rating plate.
6. Switch on the appliance.

The appliance is supplied with a 13 amp plug fitted B. In the event of having to change the fuse in the plug supplied, a 13 amp ASTA approved (BS 1362) fuse must be used.

WARNING!
A cut off plug inserted into a 13 amp socket is a serious safety (shock) hazard. Ensure that it is disposed of safely.

7.3 Door reversibility

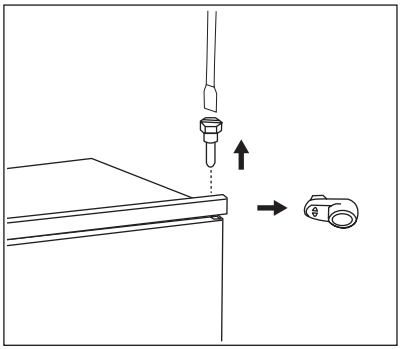

The door of the appliance opens to the right. To open the door to the left, do these steps before you install the appliance.

- Loosen and remove the upper pin.
- Remove the upper door.
- Remove the spacer.

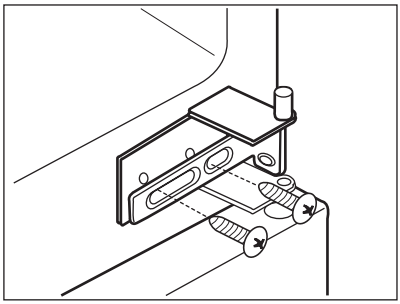

- Loosen the middle hinge.
- Remove the lower door.

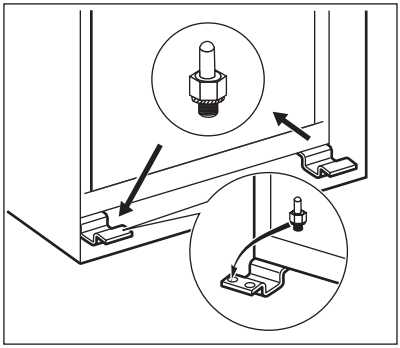

- Loosen and remove the lower pin.

On the opposite side:

- Tighten the lower pin.
- Install the lower door.
- Tighten the middle hinge.
- Install the spacer.
- Install the upper door.
- Tighten the upper pin.

7.4 Ventilation requirements

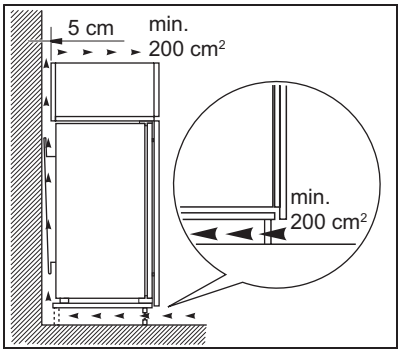

The airflow behind the appliance must be sufficient.

7.5 Installing the appliance

Do these steps.

CAUTION!
Make sure that the mains cable can move freely.

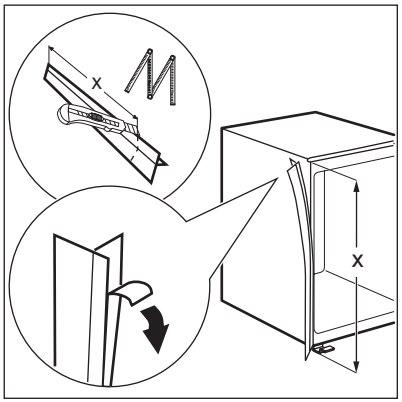

If necessary cut the adhesive sealing strip and then apply it to the appliance as shown in figure.

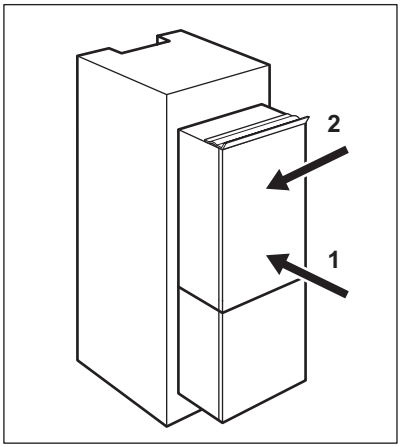

Install the appliance in the niche.
Push the appliance in the direction of the arrow (1) until the upper gap cover stops against the kitchen furniture.
Push the appliance in the direction of the arrow (2) against the cupboard on the opposite side of the hinge.

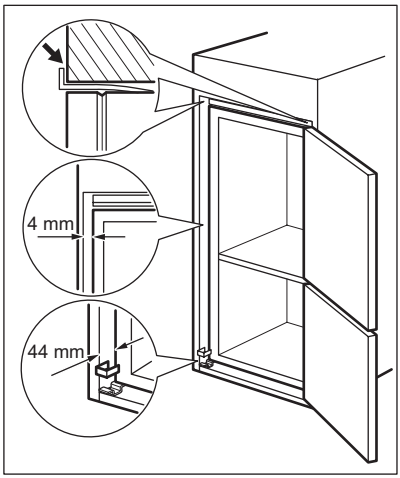

Adjust the appliance in the niche.
Make sure that the distance between the appliance and the cupboard front-edge is 44 mm.
The lower hinge cover (in the accessories bag) makes sure that the distance between the appliance and the kitchen furniture is correct.
Make sure that the clearance between the appliance and the cupboard is 4 mm.
Open the door. Put the lower hinge cover in position.

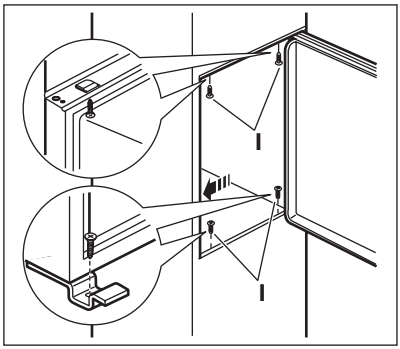

Attach the appliance to the niche with 4 screws.

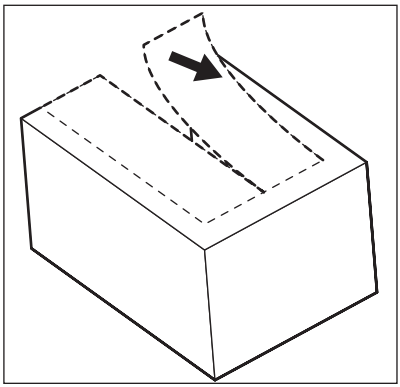

Remove the correct part from the hinge cover (E). Make sure to remove the part DX, in the case of right hinge, SX in opposite case.

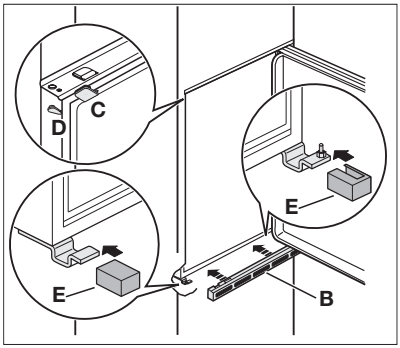

Attach the covers (C, D) to the lugs and the hinge holes.
Install the vent grille (B).
Attach the hinge covers (E) to the hinge.

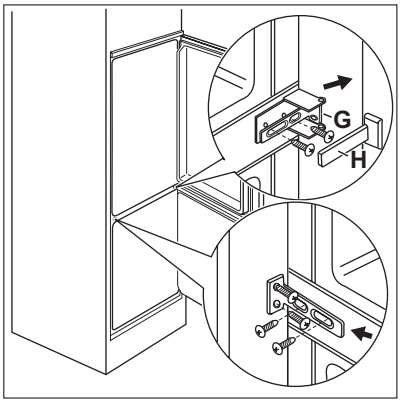

Connect the appliance laterally to the kitchen furniture sidewall:

1. Loosen the screws of the part (G) and move the part (G) till the furniture sidewall.
2. Tighten the screws of the part (G) again.
3. Attach the part (H) to the part (G).

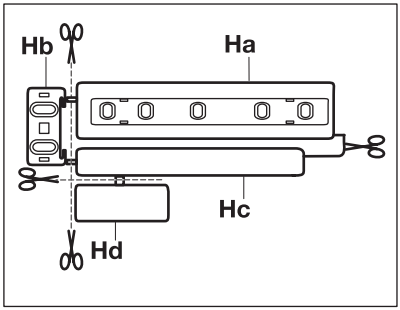

Disconnect the parts (Ha), (Hb), (Hc) and (Hd).

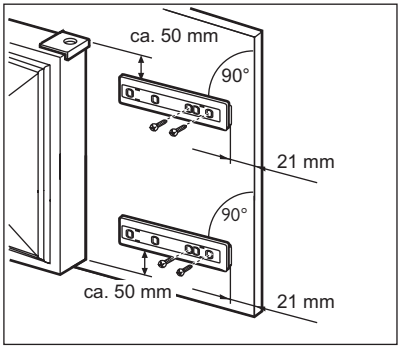

Install the part (Ha) on the inner side of the kitchen furniture.

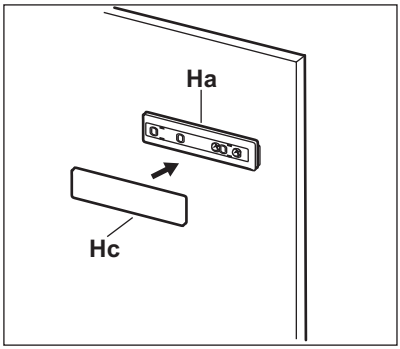

Push the part (Hc) on the part (Ha).

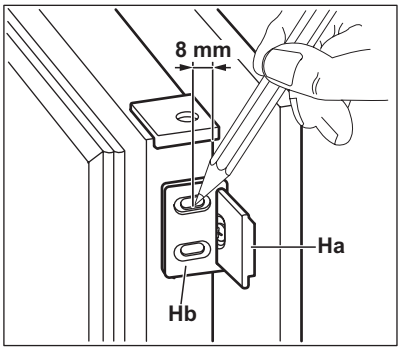

Open the appliance door and the kitchen furniture door at an angle of 90°.
Insert the small square (Hb) into guide (Ha).
Put together the appliance door and the furniture door and mark the holes.

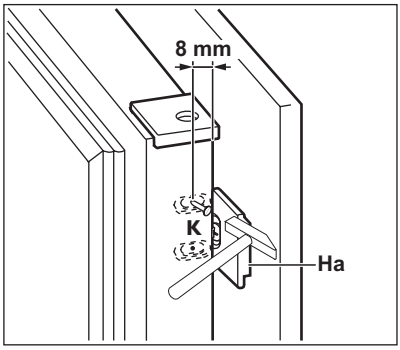

Remove the brackets and mark a distance of 8 mm from the outer edge of the door where the nail must be fitted (K).

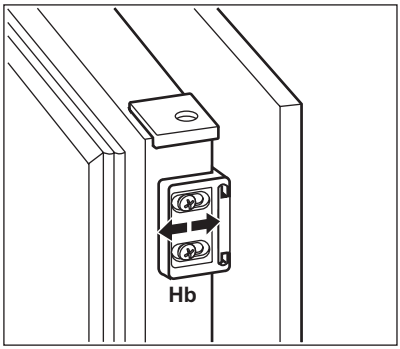

Place the small square on the guide again and fix it with the screws supplied.
Align the kitchen furniture door and the appliance door by adjusting the part (Hb).

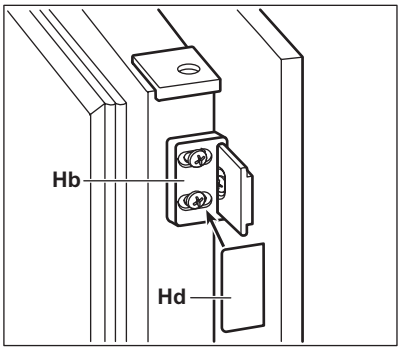

Press the part (Hd) on the part (Hb).

Do a final check to make sure that:

- All screws are tightened.
- The sealing strip is attached tightly to the cabinet.
- The door opens and closes correctly.

8. NOISES

There are some sounds during normal running (compressor, refrigerant circulation).

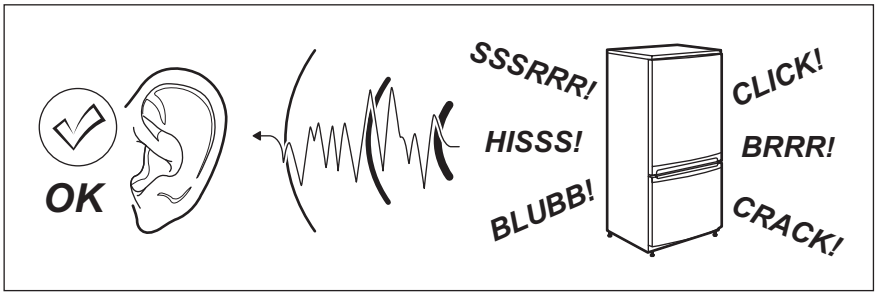

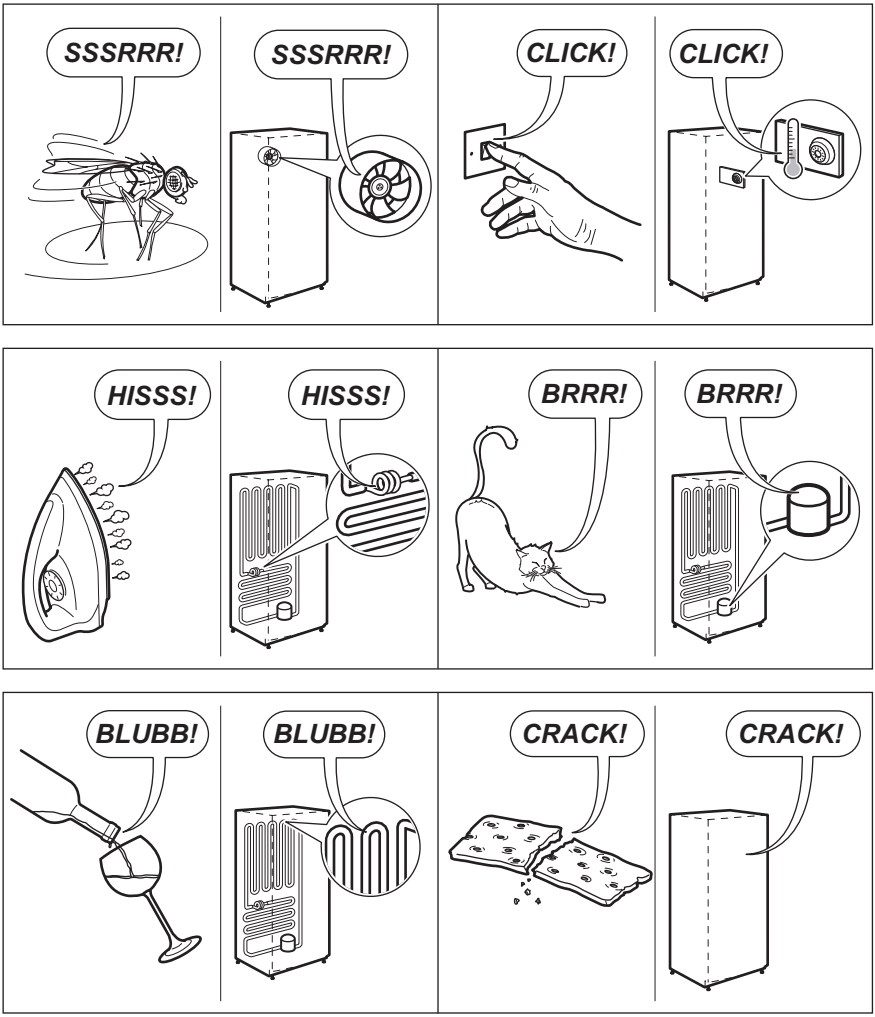
SSSRRR!
SSSRRR!
CLICK!
CLICK!
HISSS!
HISSS!
BRRR!
BRRR!
BLUBB!
BLUBB!
CRACK!
CRACK!

9. TECHNICAL DATA

Dimension of the recess		
	Height	1780 mm
	Width	560 mm
	Depth	550 mm
Rising Time		21 h
Voltage		230-240 V
Frequency		50 Hz

The technical information are situated in the rating plate on the internal left side of the appliance and in the energy label.

10. ENVIRONMENT CONCERNS

Recycle the materials with the symbol . Put the packaging in applicable containers to recycle it.
Help protect the environment and human health and to recycle waste of electrical and electronic appliances. Do not dispose appliances marked with the symbol with the household waste. Return the product to your local recycling facility or contact your municipal office.

www.electrolux.com/shop



222360431-A-092013

CE